MSG®

MECHANICAL SEALS GERMANY

Contents

Introduction

Our story was created 30 years ago. In close collaboration with ROTEN® Srl. Milano - a company which has been one of the leaders in the OEM Mechanical Industry since 1945 - we started as a simple sales agent for Germany. In addition to being a sales agent we decided to create and develop our own proper brand in 2004. **M**echanical**S**eals **G**ermany was born.Today we develop our own technology, use our experience and bring in our passion for our product in the process of manufacturing and selling mechanical seals. It is our aim to supply our customers all over the world with the best solutions to be had in the section of seals in terms of price, quality and service.

We are specialists for nearly all industrial applications and supply many important branches of industry with our seals like the food industry, biotechnology, the chemical and pharmaceutical industry, the shipping industry and more. Our engineers are able to design and develop mechanical seals for any special application customized for you. According to your specific requirements **M**echanical**S**eals**G**ermany manufactures nearly all types of standard and specific mechanical seals, rubber bellow and metal bellow seals, PTFE bellow seals, cartridges, OEM seals and customized products in various materials.

Introduction

Our company has its own proper engines and our own quality control service to achieve products of high quality and precision standards. We have all necessary qualifications. Our technical staff is highly qualified and able to advise you in the selection, design and mounting of all mechanical seals. If you have a question, our technical staff will find an appropriate, reliable and rapid answer to all your problems.

We hope this catalogue will give you a general idea of our company. Please contact us or visit us, on our website (www.msgermany.de) if you need more information about our wide range of products.

Introduction

Our company has its own proper engines and our own quality control service to achieve products of high quality and precision standards. We have all necessary qualifications. Our technical staff is highly qualified and able to advise you in the selection, design and mounting of all mechanical seals. If you have a question, our technical staff will find an appropriate, reliable and rapid answer to all your problems.

Qualitätsmanagement
ISO 9001
www.dekra-siegel.de
DEKRA
zertifiziert

We hope this catalogue will give you a general idea of our company. Please contact us or visit us, on our website (www.msgermany.de) if you need more information about our wide range of products.

Material Table
based on EN 12756 (DIN 24960)

SEALS RINGS (Item.1 and 2)

CARBIDE

SSIC solid, pressureless sintered, fine-grained	Q10
SSIC shrunked, pressureless sintered, fine-grained	Q12
SiSIC solid, reaction bonded	Q20
SiSIC shrunked, reaction bonded	Q22
C-SiC solid, carbon surface silicated	Q40
SSIC-W solid, pressureless sintered, long grained	Q50
SSIC-G solid, pressureless sintered, graphit inclusions	Q60
TC solid, Co-binder	U10
TC shrunked, Co-binder	U12
TC solid, Ni-binder	U20
TC brazed, Ni-binder	U21
TC shrunked, Ni-binder	U22
TC solid, NiCr-binder	U30
TC brazed, NiCr-binder	U31
TC shrunked, NiCr-binder	U32
TC solid, binder-free	U40
TC shrunked, binder-free	U42

METALOXYIDE

AL2O3, 99%	V10
AL2O3, 95%	V20

CARBONE GRAPHITE

Carbon solid, metal impregnated	A10
Carbon shrunked, metal impregnated	A12
Carbon solid, resin impregnated	B10
Carbon shrunked, resin impregnated	B12
Carbon resin bonded	B20
Carbon solid, special impregnated	C10
Carbon shrunked, special impregnated	C12
Carbon massiv, suitable for dry running	C20

METAL

Cr-Stainless steel; AISI431, 1.4057	E
CrNi-Stainless steel; AISI304, 1.4301	F
CrNiMo-Stainless steel; AISI316, 1.4404,14401	G1
CrNiMo-Stainless steel; AISI316Ti, 1.4571	G2
CrNiMo-Stainless steel; AISI329A, 1.4462	G3
Special CrMo cast iron	S
Bronze	N
Hastelloy®C-276, 2.4819	M

COETED MATERIAL

SSIC-Q10 coated with diamond	Q70
Stainless steel coated with Cr2O3	W
Stellite coated on AIS316	K

PTFE

PTFE glassfibre reinforced	Y1
PTFE carbon filled	Y2

SECONDARY COMPONENTS (Item.3)

ELASTOMERS

NBR, Nitril	P
EPDM, Ethylen-Propylen,	E
EPDM, Ethylen-Propylen-FDA	E1
EPDM, Ethylen-Propylen, FDA , USP , KTW , 3A , …	E2
FKM, Fluorcarbon, z. B. Viton® A	V
FKM, special-Fluorcarbon, e.g. Viton® B, GF, GLT	V1
FKM, Fluorcarbon, z. B. Viton®, FDA	V2
MVQ, Silicone	S
FVMQ, Fluorosilicone blue	S1
CR, Chloroprene	N
FFKM, Perfluorcarbone, z..B. Kalrez® 6375	K1
FFKM, Perfluorcarbone for high temperature, e.g. Kalrez® 4079	K2
FFKM, Perfluorcarbone for food an pharma, e.g. Kalrez® 6230(black)	K3
e.g. Kalrez® 6221(white)	K4
TTV, FKM double PTFE wrapped	M1
TTE, EPDM double wrapped	M2
FEP-S, MVQ FEP wrapped	M4
FEP-V, FKM FEP wrapped	M5
FEP-E, EPDM FEP wrapped	M6
HNBR, Hydrogenated Nitrile	X1
XFKM, FEPM, Tetrafluor-Ethylen-Propylene e.g. Fluoraz®, Aflas®	X2

NON-ELASTOMERES

Pure Graphite	G
Synthetic Aramid bases fiber, asbestosfree	Y
PTFE pure	T
PTFE glass fibre reinforced	T1

CONSTRUCTION MATERIALS (Item.4 and 5)

Cr-Stainless steel; AISI431, 1.4057	E
CrNi-Stainless steel; AISI304, 1.4310, 1.4301	F
CrNiMo-Stainless steel; AISI316, 1.4404,14401	G1
CrNiMo-Stainless steel; AISI316Ti, 1.4571	G2
CrNiMo-Stainless steel; AISI329A, 1.4462	G3
CrNiMo-Stainless steel; AISI316L, 1.4435	G4
SUPER DUPLEX;904L, 1.4539, or similar	G5
Bronze	N
Hastelloy®C-4, 2.4610	M1
Hastelloy®B-2, 2.4617	M2
Hastelloy®C-276, 2.4819	M3
Carpenter®20, 2.4660	M4
Carpenter®42	M5
AM350, special alloy	M6
Inconel®; 718	M7
Titanium grade 2	T

Mechanical Seals Types Overview

O-Ring mechanical seals

Unbalanced, dependent on rotation

Unbalanced, independent on rotation

Balanced, dependent on rotation, stepped shaft

Balanced, independent on rotation, stepped shaft

Balanced, independent on rotation, plain shaft

Balanced, dependent on rotation, special versions

Wedge gasket mechanical seals

Unbalanced, dependent on rotation

Unbalanced, independent on rotation

Balanced, independent on rotation, stepped shaft

Outside mounted mechanical seals

With PTFE

Elastomere bellows seals

Metal bellow seals

Double mechanical seals

Cartridge mechanical seals

Special versions

Mixers, agitators mechanical seals

Supply systems

ATEX compliant (see page 130)

CC-Versions

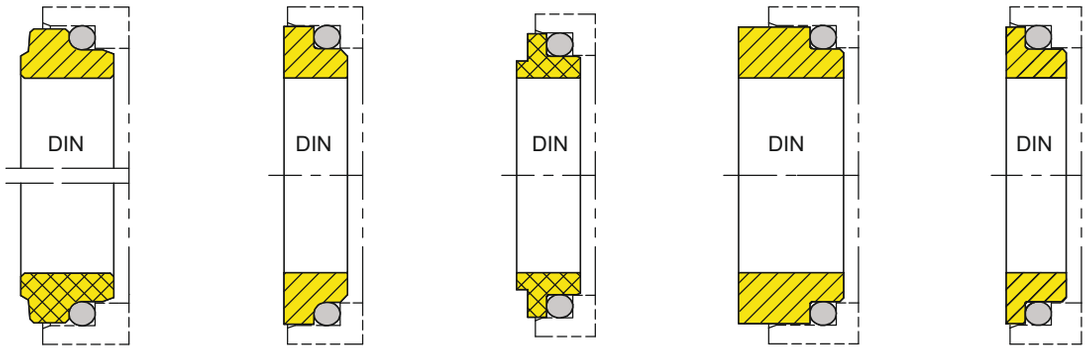

Type	UCC	U6CC	U66CC	UBOCC	UBSCC
Material	Q, U	Q, V	A, B, C	Q, U, V	Q, U, V
	A, B, C				

CC-Versions

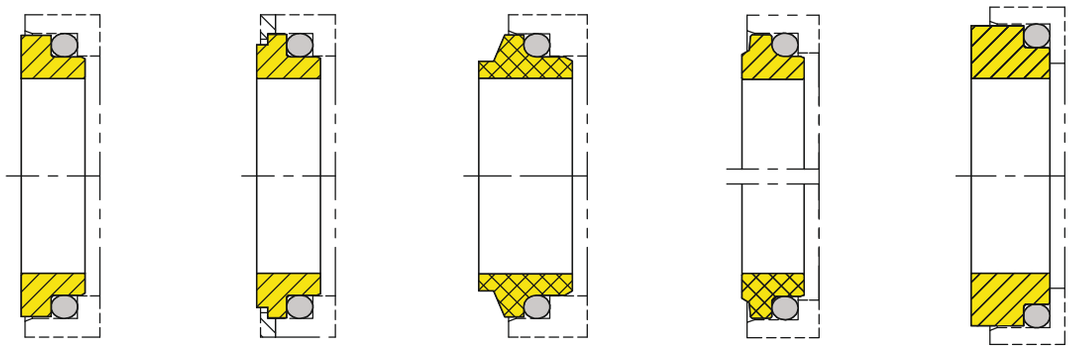

Type	B4CC	B7CC	B13CC	RCC	CWMCC
Material	Q, V	Q	A, B, C	Q, U	Q, U, V
				A, B, C	

CL-Versions

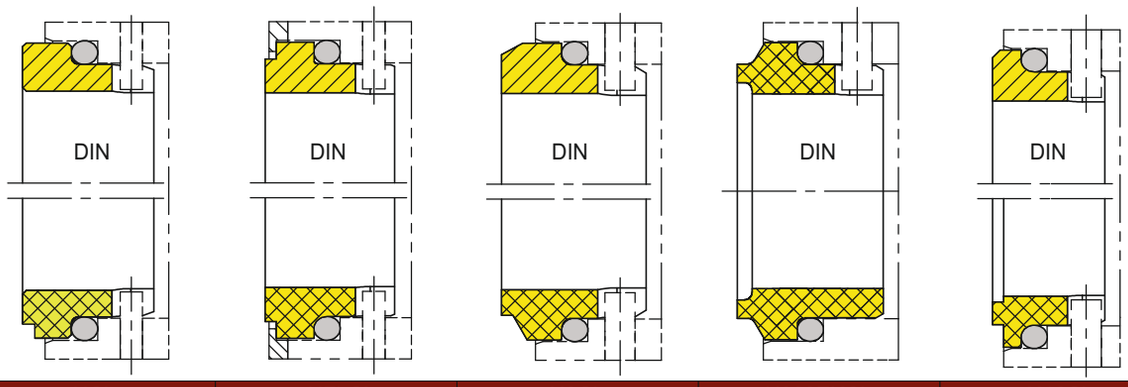

Type	UCL	UFLCL	U9CL	U983EKCL	U16CL
Material	Q, U	Q, U	Q, U, V	A, B, C	Q, U
	A, B, C	A, B, C	A, B, C		A, B, C

CL-Versions

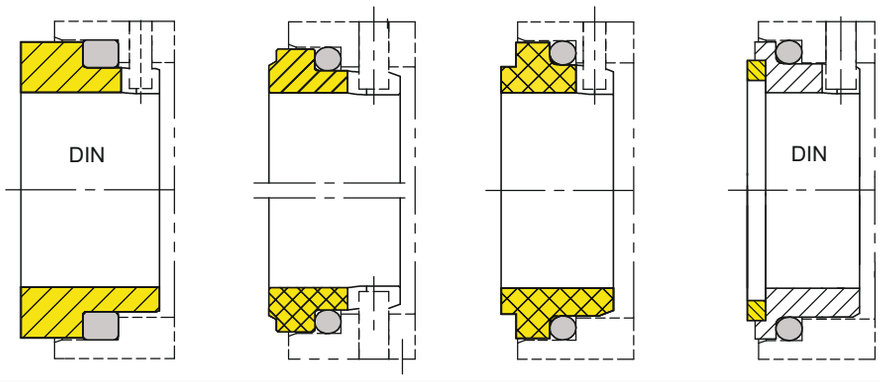

Type	UBPCL	RCL	MCL	U46CL
Material	Q, U, V	Q, U, V	A, B, C	Q, U
		A, B, C		

Stationary Basic Types

CM-Versions

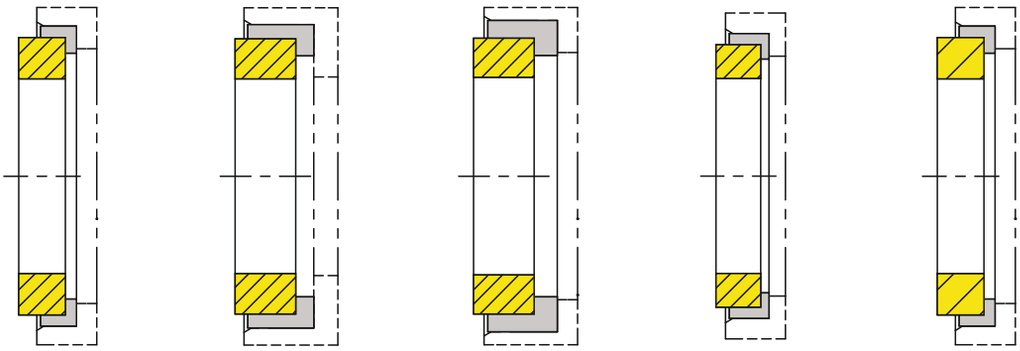

Type	U60CM	C50CM	C55CM	B40CM	UMCM
Material	Q, U, V	Q, U, V	Q, U, V	Q, U, V	Q, U, V

Special versions

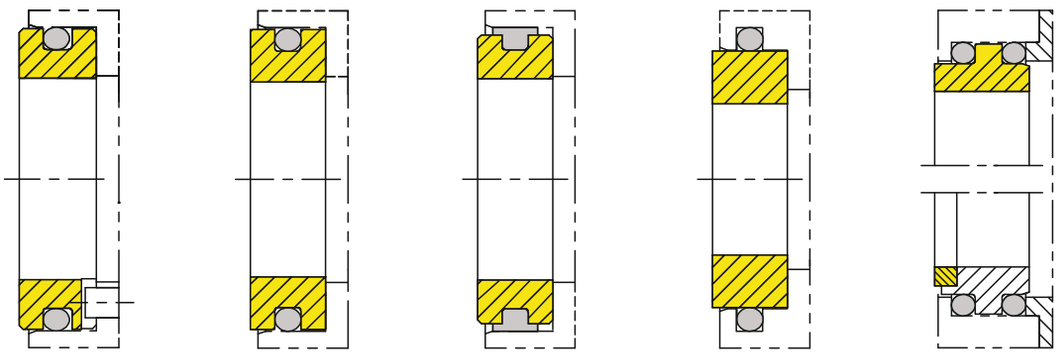

Type	CWCN	XXCN	XXCT	CPCC	CDO
Material	Q, U, V	Q, U, V	Q, U, V	Q, U, V	Q, U, V

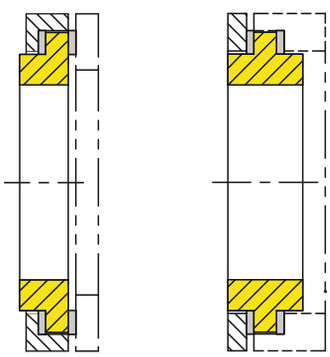

Type	CV	CD
Material	Q, U, V	Q, U, V

Simple mass-produced seal
Conical spring rotating
Massive seal rings

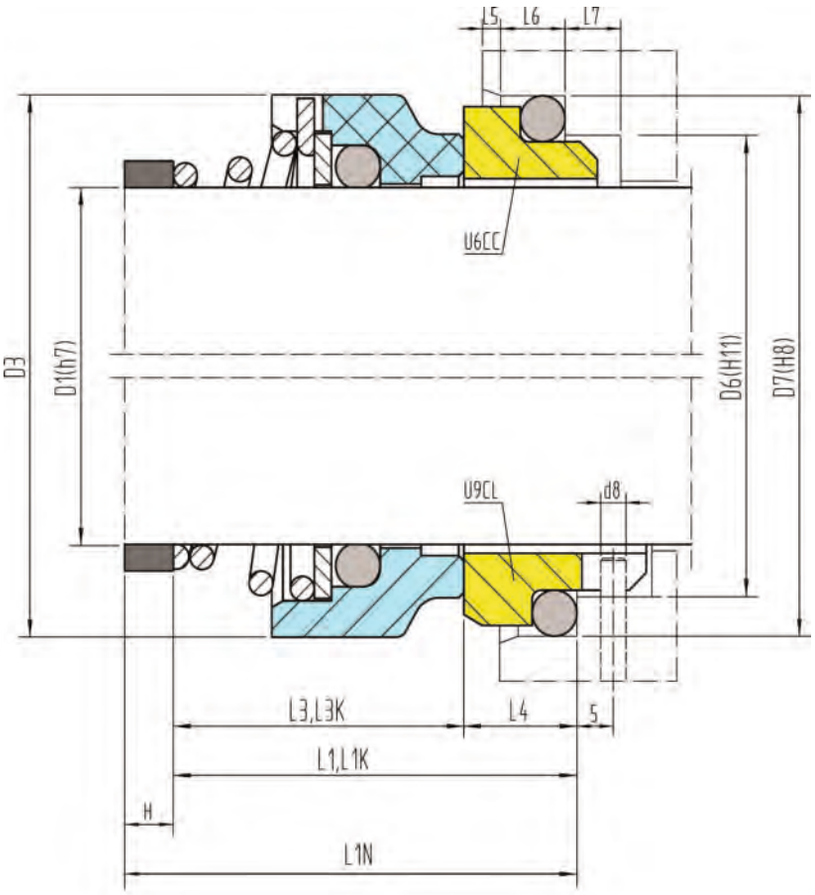

L1=L3+L4
L1K=L3K+L4
L1N=L3+H+L4

Materials:
Rotary: A, B,Q, U
Stationary:Q,U, V
Rubber parts: P, E, V, K, M

Operating limits:
(look at working conditions page 112)

p⩽	12 bar
t=	-20 ÷ 140°C (180°C)
v⩽	15 m/s

EN 12756 (DIN 24960)												UCC		UCL	U6CC			U9CL		
D1	D6	D7	D3	L1K	L3K	L1N	L1	L3	L4	L6	L5	H	D8	L7	L1	L3	L4	L1	L3	L4
6*	11	16	15	—	—	—	15.5	11	4.5	—	—	—	—	—	—	—	—	—	—	—
7-9*	15.5	19.2	18	—	—	—	19	12	7	—	—	—	—	—	—	—	—	—	—	—
10	17	21	20	32.5	25.5	40	22	15	7	4	1.5	18	3	8.5	22.5	15.9	6.6	25.5	15.5	10
11*	19	23	22	—	—	—	25	18	7	—	—	—	—	—	—	—	—	—	—	—
12	19	23	22	32.5	25.5	40	25	18	7	4	1.5	15	3	8.5	22.6	16	6.6	26	16	10
13*	21	25	24	—	—	—	29	22	7	—	—	—	—	—	—	—	—	—	—	—
14	21	25	25	35	28	40	29	22	7	4	1.5	11	3	8.5	22.6	16	6.6	26.5	16.5	10
15*	23	27	26	—	—	—	30	23	7	—	—	—	—	—	—	—	—	—	—	—
16	23	27	27	35	28	40	30	23	7	4	1.5	10	3	8.5	25.6	19	6.6	28	18	10
18	27	33	30	37.5	27.5	45	34	24	10	5	2	11	3	9	28	20.5	7.5	31	19.5	11.5
20	29	35	32	37.5	27.5	45	35	25	10	5	2	10	3	9	29.5	22	7.5	33.5	22	11.5
22	31	37	35	37.5	27.5	45	35	25	10	5	2	10	3	9	31	23.5	7.5	33	21.5	11.5
24	33	39	38	40	30	50	37	27	10	5	2	13	3	9	32.5	25	7.5	35	23.5	11.5
25	34	40	40	40	30	50	37	27	10	5	2	13	3	9	34	26.5	7.5	38	26.5	11.5
28	37	43	43	42.5	32.5	50	39	29	10	5	2	11	3	9	34	26.5	7.5	38	26.5	11.5
30	39	45	47	42.5	32.5	50	40	30	10	5	2	10	3	9	32.5	25	7.5	36.5	25	11.5
32	42	48	48	42.5	32.5	55	40	30	10	5	2	15	3	9	36	28.5	7.5	40	28.5	11.5
33	42	48	50	42.5	32.5	55	49	39	10	5	2	6	3	9	36	28.5	7.5	40	28.5	11.5
35	44	50	53	42.5	32.5	55	49	39	10	5	2	6	3	9	36	28.5	7.5	40	28.5	11.5
38	49	56	56	45	32	55	55	42	13	6	2	—	4	9	41	32	9	46	32	14
40	51	58	58	45	32	55	55	42	13	6	2	—	4	9	45	36	9	—	—	—

*not according to EN 12756

Spacer ring is not included in the delivery of the mechanical seal.

Simple mass-produced seal
Conical spring rotating
Massive seal rings

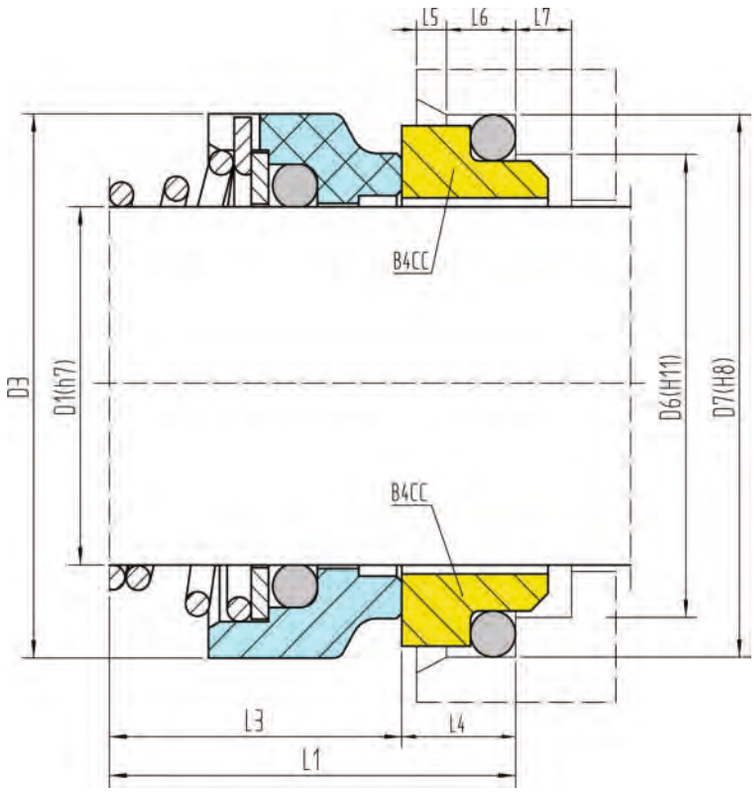

Materials:
Rotary: A, B,Q, U
Stationary:Q,U, V
Rubber parts: P, E, V, K, M

Operating limits:
(look at working conditions page 112)

p≤	12 bar
t=	-20 ÷ 140°C (180°C)
v≤	15 m/s

Special fitting dimensions **B4CC**

D1	D6	D7	D3	L1	L3	L4	L6	L5	L7
10	15.5	19.2	21	22.5	15.9	6.6	3.8	1.5	8.5
12	17.5	21.6	22	21.6	16	5.6	3.8	1.5	8.5
14	20.5	24.6	25	21.6	16	5.6	3.8	1.5	8.5
15	20.5	24.6	27	24	17.4	6.6	3.8	1.5	8.5
16	22	28	27	26.5	19	7.5	5	1.5	8.5
18	24	30	30	28.5	20.5	8	5	2	9
19	29.5	35	32	29.5	22	7.5	5	2	9
20	29.5	35	32	29.5	22	7.5	5	2	9
22	29.5	35	35	31	23.5	7.5	5	2	9
24	32	38	38	32.5	25	7.5	5	2	9
25	32	38	40	34	26.5	7.5	5	2	9
26	34	40	41	34.5	26.5	8	5	2	9
28	36	42	43	35.5	26.5	9	5	2	9
30	39.2	45	47	35.5	25	10.5	5	2	9
32	42.5	48	48	39	28.5	10.5	5	2	9
35	46.2	52	53	39.5	28.5	11	6.5	2	9
38	49.2	55	56	42.3	32	10.3	6.5	2	9
40	52.2	58	56	44.8	34	10.8	6.5	2	9

2-2K-2N

Universal allround seal
Conical spring rotating
Massive or brazed seal rings

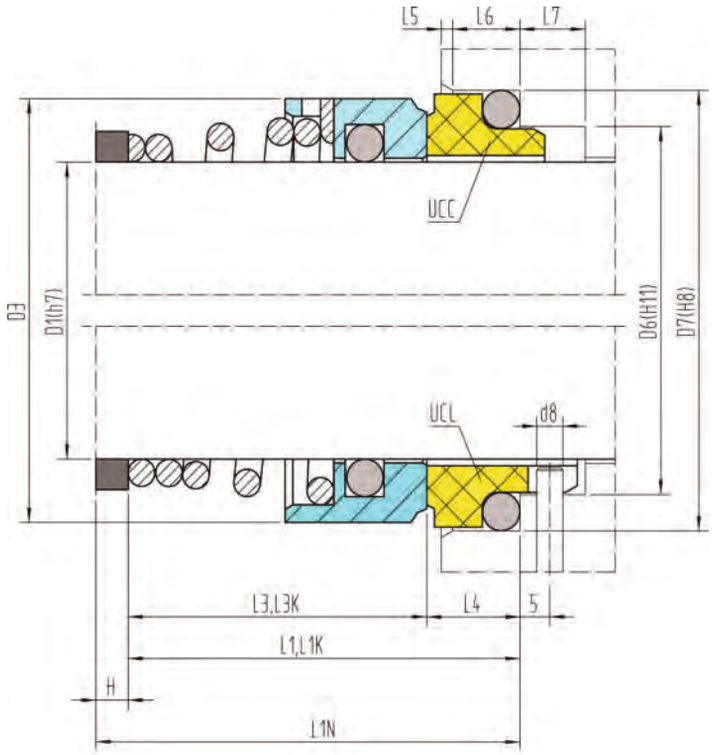

L1=L3+L4
L1K=L3K+L4
L1N=L3+H+L4

Operating limits:
(look at working conditions page 112)

p≤	12bar (16bar)
t=	-35 ÷ 140°C (180°C)
v≤	15 m/s

Materials:
Rotary: E, F, G, U
Stationary: A, B, Q,U, V
Rubber parts: P, E, V, K, M

EN 12756 (DIN 24960)												UCC UCL			U9CL		
D1	D6	D7	D3	L1K	L3K	L1N	L1	L3	L4	L6	L5	H	D8	L7	L1	L3	L4
10	17	21	21	32.5	25.5	40	22	15	7	4	1.5	18	3	8.5	25.5	15.5	10
12	19	23	22	32.5	25.5	40	25	18	7	4	1.5	15	3	8.5	26	16	10
14	21	25	24	35	28	40	29	22	7	4	1.5	11	3	8.5	26.5	16.5	10
16	23	27	26	35	28	40	30	23	7	4	1.5	10	3	8.5	28	18	10
18	27	33	29	37.5	27.5	45	34	24	10	5	2	11	3	9	31	19.5	11.5
20	29	35	30	37.5	27.5	45	35	25	10	5	2	10	3	9	33.5	22	11.5
22	31	37	34	37.5	27.5	45	35	25	10	5	2	10	3	9	33	21.5	11.5
24	33	39	35	40	30	50	37	27	10	5	2	13	3	9	35	23.5	11.5
25	34	40	37	40	30	50	37	27	10	5	2	13	3	9	38	26.5	11.5
28	37	43	42	42.5	32.5	50	39	29	10	5	2	11	3	9	38	26.5	11.5
30	39	45	45	42.5	32.5	50	40	30	10	5	2	10	3	9	38	26.5	11.5
32	42	48	45	42.5	32.5	55	40	30	10	5	2	15	3	9	40	28.5	11.5
33	42	48	48	42.5	32.5	55	49	39	10	5	2	6	3	9	40	28.5	11.5
35	44	50	50	42.5	32.5	55	49	39	10	5	2	6	3	9	40	28.5	11.5
38	49	56	54	45	32	55	55	42	13	6	2	—	4	9	47.5	33.5	14
40	51	58	56	45	32	55	55	42	13	6	2	—	4	9	50	36	14
43	54	61	60	45	32	60	60	47	13	6	2	—	4	9	52.5	38.5	14
45	56	63	64	45	32	60	60	47	13	6	2	—	4	9	53.5	39.5	14
48	59	66	67	45	32	60	60	47	13	6	2	—	4	9	60	46	14
50	62	70	69	47.5	33.5	60	60	46	14	6	2.5	—	4	9	60	45	15
53	65	73	74	47.5	33.5	70	70	56	14	6	2.5	—	4	9	62	47	15
55	67	75	74	47.5	33.5	70	70	56	14	6	2.5	—	4	9	64	49	15
58	70	78	80	52.5	38.5	70	70	56	14	6	2.5	—	4	9	70	55	15
60	72	80	80	52.5	38.5	70	70	56	14	6	2.5	—	4	9	70	55	15
63	75	83	87	52.5	38.5	70	70	56	14	6	2.5	—	4	9	70	55	15
65	77	85	87	52.5	38.5	80	80	66	14	6	2.5	—	4	9	70	55	15
68	81	90	92	52.5	36.5	80	80	64	16	7	2.5	—	4	9	73	55	18
70	83	92	92	60	44	80	80	64	16	7	2.5	—	4	9	75	57	18
75	88	97	97	60	44	80	80	64	16	7	2.5	—	4	9	80	62	18
80	95	105	102	60	42	90	90	72	18	7	3	—	4	9	80	61.8	18.2
85	100	110	110	60	42	90	90	72	18	7	3	—	4	9	80	61.8	18.2
90	105	115	117	65	42	90	90	72	18	7	3	—	4	9	80	61.8	18.2
95	110	120	122	65	42	90	90	72	18	7	3	—	4	9	78	60.8	17.2
100	115	125	127	65	42	90	90	72	18	7	3	—	4	9	78	60.8	17.2

Spacer ring is not included in the delivery of the mechanical seal.

Universal allround seal
Conical spring rotating
Shrinked seal rings

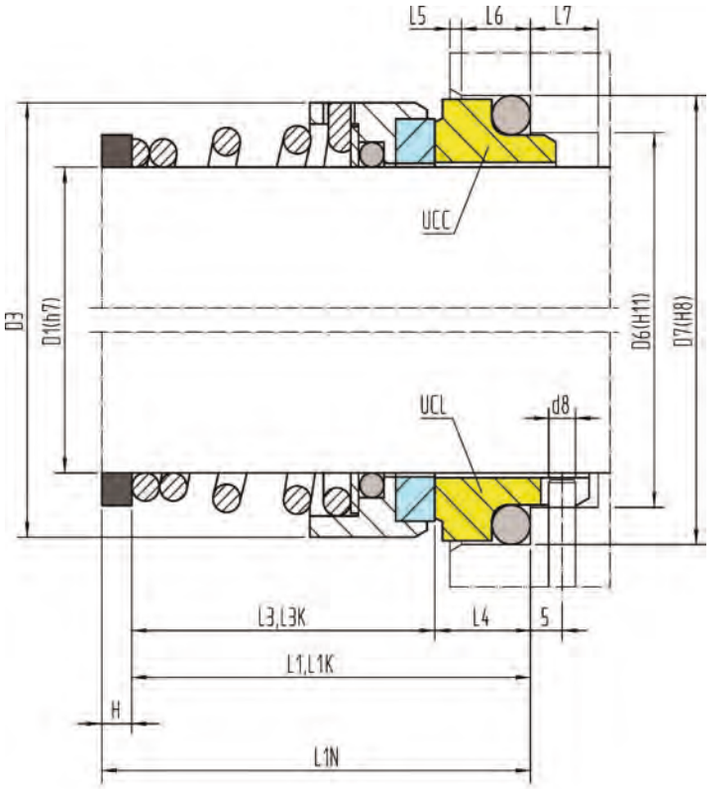

L1=L3+L4
L1K=L3K+L4
L1N=L3+H+L4

Materials:
Rotary: A, B,Q, U
Stationary: A, B, Q,U, V
Rubber parts: P, E, V, K, M

Operating limits:
(look at working conditions page 112)

p⩽	12bar (16bar)
t=	-35 ÷ 140°C (180°C)
v⩽	15 m/s

EN 12756 (DIN 24960)												UCC	UCL		U6CC			U9CL		
D1	D6	D7	D3	L1K	L3K	L1N	L1	L3	L4	L6	L5	H	D8	L7	L1	L3	L4	L1	L3	L4
10	17	21	21	32.5	25.5	40	22	15	7	4	1.5	18	3	8.5	22.1	15.5	6.6	25.5	15.5	10
12	19	23	22	32.5	25.5	40	25	18	7	4	1.5	15	3	8.5	22.6	16	6.6	26	16	10
14	21	25	24	35	28	40	29	22	7	4	1.5	11	3	8.5	23.1	16.5	6.6	26.5	16.5	10
16	23	27	26	35	28	40	30	23	7	4	1.5	10	3	8.5	24.6	18	6.6	28	18	10
18	27	33	29	37.5	27.5	45	34	24	10	5	2	11	3	9	27	19.5	7.5	31	19.5	11.5
20	29	35	30	37.5	27.5	45	35	25	10	5	2	10	3	9	29.5	22	7.5	33.5	22	11.5
22	31	37	34	37.5	27.5	45	35	25	10	5	2	10	3	9	29	21.5	7.5	33	21.5	11.5
24	33	39	35	40	30	50	37	27	10	5	2	13	3	9	31	23.5	7.5	35	23.5	11.5
25	34	40	37	40	30	50	37	27	10	5	2	13	3	9	34	26.5	7.5	38	26.5	11.5
28	37	43	42	42.5	32.5	50	39	29	10	5	2	11	3	9	34	26.5	7.5	38	26.5	11.5
30	39	45	45	42.5	32.5	50	40	30	10	5	2	10	3	9	34	26.5	7.5	38	26.5	11.5
32	42	48	45	42.5	32.5	55	40	30	10	5	2	15	3	9	36	28.5	7.5	38	28.5	11.5
33	42	48	48	42.5	32.5	55	49	39	10	5	2	6	3	9	36	28.5	7.5	38	28.5	11.5
35	44	50	50	42.5	32.5	55	49	39	10	5	2	6	3	9	36	28.5	7.5	38	28.5	11.5
38	49	56	54	45	32	55	55	42	13	6	2	—	4	9	42.5	33.5	9	47.5	33.5	14
40	51	58	56	45	32	55	55	42	13	6	2	—	4	9	45	36	9	50	36	14
43	54	61	60	45	32	60	60	47	13	6	2	—	4	9	47.5	38.5	9	52.5	38.5	14
45	56	63	64	45	32	60	60	47	13	6	2	—	4	9	48.5	39.5	9	53.5	39.5	14
48	59	66	67	45	32	60	60	47	13	6	2	—	4	9	55	46	9	60	46	14
50	62	70	69	47.5	33.5	60	60	46	14	6	2	—	4	9	54.5	45	9.5	60	45	15
53	65	73	74	47.5	33.5	70	70	56	14	6	2	—	4	9	58	47	11	62	47	15
55	67	75	74	47.5	33.5	70	70	56	14	6	2	—	4	9	60	49	11	64	49	15
58	70	78	80	52.5	38.5	70	70	56	14	6	2	—	4	9	66	55	11	70	55	15
60	72	80	80	52.5	38.5	70	70	56	14	6	2	—	4	9	66	55	11	70	55	15
63	75	83	87	52.5	38.5	70	70	56	14	6	2	—	4	9	66	55	11	70	55	15
65	77	85	87	52.5	38.5	80	80	66	14	6	2	—	4	9	66	55	11	70	55	15
68	81	90	92	52.5	36.5	80	80	64	16	7	2	—	4	9	66.3	55	11.3	73	55	18
70	83	92	92	60	44	80	80	64	16	7	2	—	4	9	66.3	57	11.3	75	57	18
75	88	97	97	60	44	80	80	64	16	7	2	—	4	9	73.3	62	11.3	80	62	18
80	95	105	102	60	42	90	90	72	18	7	2	—	4	9	73.8	61.8	12	80	61.8	18.2
85	100	110	110	60	42	90	90	72	18	7	2	—	4	9	75.8	61.8	14	80	61.8	18.2
90	105	115	117	65	42	90	90	72	18	7	2	—	4	9	75.8	61.8	14	80	61.8	18.2
95	110	120	122	65	42	90	90	72	18	7	2	—	4	9	75.8	60.8	14	78	60.8	17.2
100	115	125	127	65	42	90	90	72	18	7	2	—	4	9	75.8	60.8	14	78	60.8	17.2

Spacer ring is not included in the delivery of the mechanical seal.

2U2-2U2CA

Universal allround seal
Conical spring rotating
Shrinked seal rings

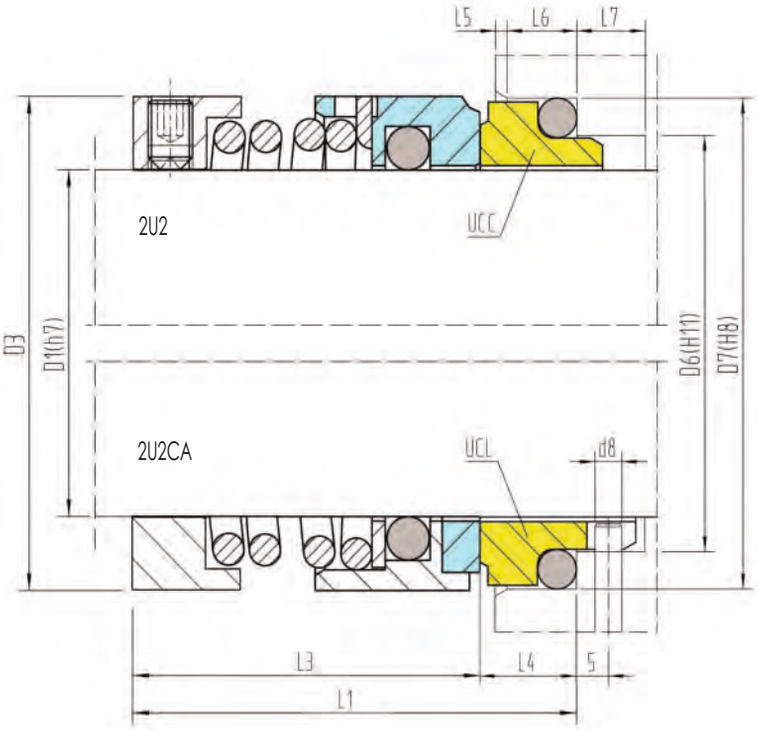

Materials:
Rotary: A, B,Q, U
Stationary: A, B, Q,U, V
Rubber parts: P, E, V, K, M

Operating limits:
(look at working conditions page 112)

p⩽	12bar (16bar)
t=	-35 ÷ 140°C (180°C)
v⩽	15 m/s

EN 12756 (DIN 24960) **UCC UCL**

D1	D6	D7	D3	L1	L3	L4	L6	L5	D8	L7
10	17	21	21	22	15	7	4	1.5	3	8.5
12	19	23	22	25	18	7	4	1.5	3	8.5
14	21	25	24	29	22	7	4	1.5	3	8.5
16	23	27	26	30	23	7	4	1.5	3	8.5
18	27	33	29	34	24	10	5	2	3	9
20	29	35	30	35	25	10	5	2	3	9
22	31	37	34	35	25	10	5	2	3	9
24	33	39	35	37	27	10	5	2	3	9
25	34	40	37	37	27	10	5	2	3	9
28	37	43	42	39	29	10	5	2	3	9
30	39	45	45	40	30	10	5	2	3	9
32	42	48	45	40	30	10	5	2	3	9
33	42	48	48	49	39	10	5	2	3	9
35	44	50	50	49	39	10	5	2	3	9
38	49	56	54	55	42	13	6	2	4	9
40	51	58	56	55	42	13	6	2	4	9
43	54	61	60	60	47	13	6	2	4	9
45	56	63	64	60	47	13	6	2	4	9
48	59	66	67	60	47	13	6	2	4	9
50	62	70	69	60	46	14	6	2	4	9
53	65	73	74	70	56	14	6	2	4	9
55	67	75	74	70	56	14	6	2	4	9
58	70	78	80	70	56	14	6	2	4	9
60	72	80	80	70	56	14	6	2	4	9
63	75	83	87	70	56	14	6	2	4	9
65	77	85	87	80	66	14	6	2	4	9
68	81	90	92	80	64	16	7	2	4	9
70	83	92	92	80	64	16	7	2	4	9
75	88	97	97	80	64	16	7	2	4	9
80	95	105	102	90	72	18	7	2	4	9
85	100	110	110	90	72	18	7	2	4	9
90	105	115	117	90	72	18	7	2	4	9
95	110	120	122	90	72	18	7	2	4	9
100	115	125	127	90	72	18	7	2	4	9

Universal allround seal
Conical spring rotating
Massive, brazed or shrinked seal rings

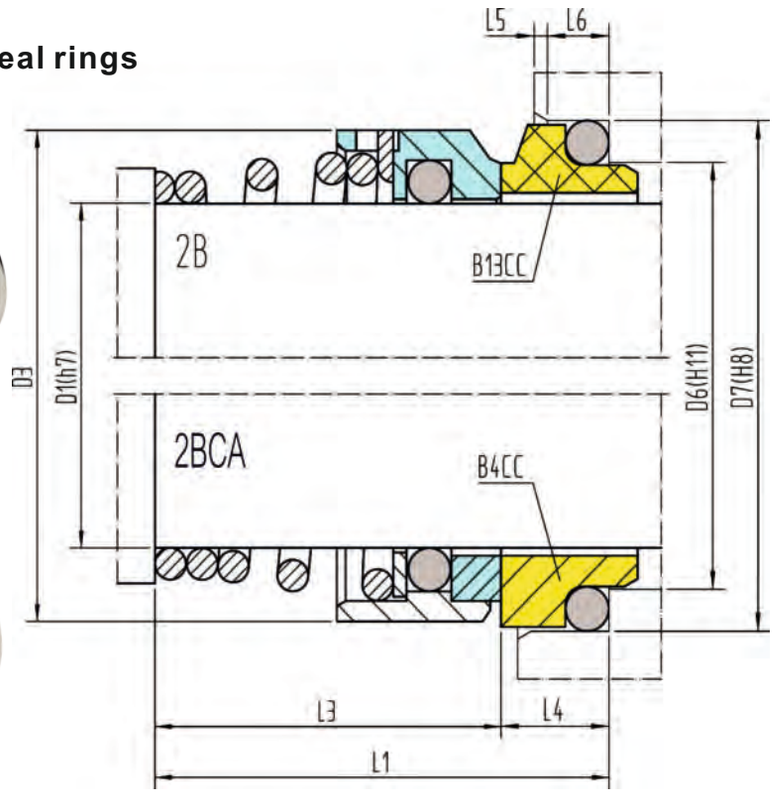

Materials:
Rotary: A, B, E, F, G, Q, U
Stationary: A, B, Q,U
Rubber parts: P, E, V, K, M

Operating limits:
(look at working conditions page 112)

2B		2BCA	
p⩽	12 bar	p⩽	16 bar
t=	-35 ÷ 180°C	t=	-35 ÷ 140°C
v⩽	15 m/s	v⩽	15 m/s

Special fitting dimensions								B4CC	B13CC		
D1	D6	D7	D3	L1	L3	L4	L6	L5	L1	L3	L4
10	15.5	19.2	21	22.1	15.5	6.6	3.8	1.5	22.6	15.5	7.1
12	17.5	21.6	22	21.1	15.5	5.6	3.8	1.5	23.1	15.5	7.6
14	20.5	24.6	24	21.1	15.5	5.6	3.8	1.5	23.1	15.5	7.6
15	20.5	24.6	25	22.1	15.5	6.6	3.8	1.5	24.1	15.5	8.6
16	22	28	26	25	17.5	7.5	5	1.5	26.5	17.5	9
18	24	30	29	26.5	18.5	8	5	2	28.5	18.5	10
19	29.5	35	30	27.5	20	7.5	5	2	29.5	20	9.5
20	29.5	35	30	27.5	20	7.5	5	2	29.5	20	9.5
22	29.5	35	34	29	21.5	7.5	5	2	31	21.5	9.5
24	32	38	35	30.5	23	7.5	5	2	32.5	23	9.5
25	32	38	37	31.5	24.5	7.5	5	2	34	24.5	9.5
26	34	40	38	32.5	24.5	8	5	2	34.5	24.5	10
28	36	42	42	33.5	24.5	9	5	2	35.5	24.5	11
30	39.2	45	45	35	24.5	10.5	5	2	35.5	24.5	11
32	42.5	48	42	38.5	28	10.5	5	2	39	28	11
35	46.2	52	50	39	28	11	5	2	39.5	28	11.5
38	49.2	55	54	41.3	31	10.3	5	2	42.5	31	11.5
40	52.2	58	56	44.8	34	10.8	5	2	45.5	34	11.5
42	53.3	62	60	47	35	12	6	2	49.3	35	14.3
45	55.3	64	64	48.1	36.5	11.6	6	2	50.8	36.5	14.3
48	59.7	68.4	67	53.6	42	11.6	6	2	56.3	42	14.3
50	60.8	69.3	69	54.6	43	11.6	6	2.5	57.3	43	14.3
55	66.5	75.4	74	60.3	47	13.3	6	2.5	62.3	47	15.3
58	69.5	78.4	80	63.3	50	13.3	6	2.5	65.3	50	15.3
60	71.5	80.4	80	64.3	51	13.3	6	2.5	66.3	51	15.3
65	76.5	85.4	87	65	52	13	6	2.5	67.3	52	15.3
68	82.7	91.5	92	66.7	53	13.7	6	2.5	69	53	16
70	83	92	92	67	54	13	6	2.5	69.3	54	15.3
75	90.2	99	97	69	55	14	6	2.5	70.3	55	15.3
80	95.2	104	102	73	58	15	6	3	74.3	58	16.3

2R-2RCA-2RMC-2RMCCA

Universal allround seal
Conical spring rotating
Massive, brazed or shrinked seal rings

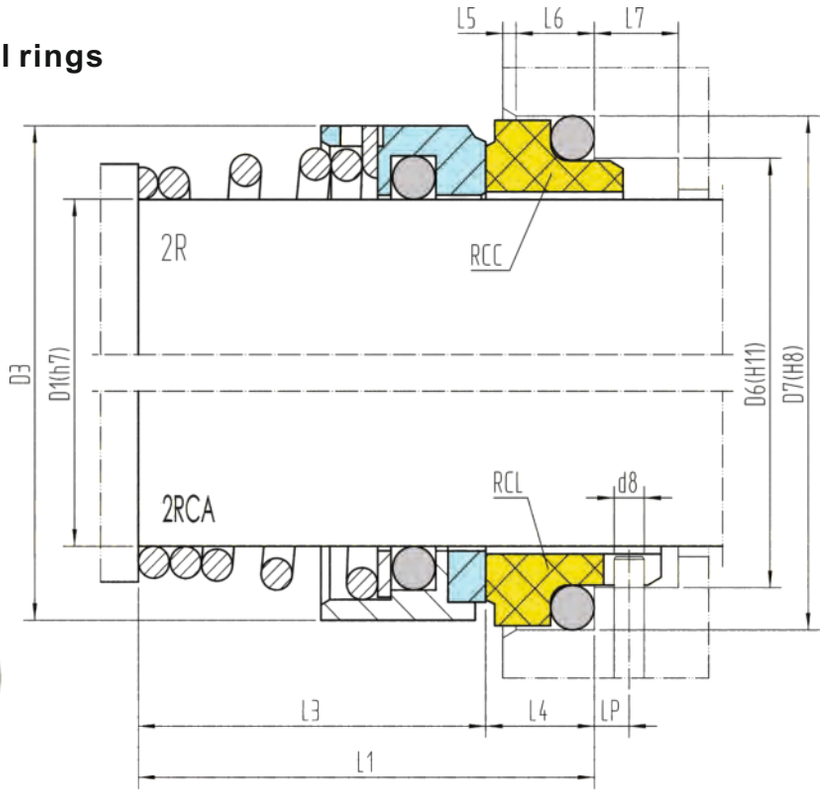

Materials:
Rotary: A, B, E, F, G, Q, U
Stationary: A, B, Q, U
Rubber parts: P, E, V, K, M

Operating limits:
(look at working conditions page 112)

2R –2RMC		2RCA –2RMCCA	
p⩽	12 bar	p⩽	16 bar
t=	-35 ÷ 180°C	t=	-35 ÷ 140°C
v⩽	15 m/s	v⩽	15 m/s

Special fitting dimensions										RCC	RCL	2RMC-2RMCCA	
D1	D6	D7	D3	L1	L3	L4	L6	L5	D8	L7	Lp	L1	L3
6	10.6	13.1	13.5	19.5	15	4.5	2	1.2	2	6	3.5	—	—
7	13	17.1	14.5	20.5	15	5.5	2.8	1.2	2	6.2	3.5	15.5	10
8	13	17.1	15.8	20.5	15	5.5	2.8	1.2	2	6.2	3.5	15.5	10
9	13	17.1	16.5	20.5	15	5.5	2.8	1.2	2	6.2	3.5	15.5	10
10	14	18.1	21	20.5	15	5.5	2.8	1.2	2	6.2	3.5	17.5	12
11÷12	16.5	20.6	22	23.5	18	5.5	2.8	1.2	2	6.2	3.5	19.5	14
13÷14	19	23.1	24	28	22	6	2.8	1.2	2	6.7	4	23	17
15	21	26.9	24	29	22	7	3.7	1.3	2.5	7.6	4	24	17
16÷17	21	26.9	26	30	23	7	3.7	1.3	2.5	7.6	4	25	18
18	25	30.9	29	32	24	8	3.7	1.3	3	8.5	4.5	26	18
19÷20	25	30.9	30	33	25	8	3.7	1.3	3	8.5	4.5	28	20
21÷22	30	35.4	34	33	25	8	3.7	1.8	3.5	8.5	5	28	20
23÷24	30	35.4	35	35	27	8	3.7	1.8	3.5	8.5	5	30	22
25÷27	33	38.2	37	35.5	27	8.5	3.7	1.8	4	9.1	5	29.5	21
28	38	43.3	42	38	29	9	3.7	1.8	4	9.6	6	31	22
29÷32	38	43.3	45	39	30	9	3.7	1.8	4	9.6	6	31	23
33÷34	45	53.5	45	50.5	39	11.5	5.4	2.1	5	12	7.5	41.5	30
35÷37	45	53.5	50	50.5	39	11.5	5.4	2.1	5	12	7.5	41.5	30
38÷43	52	60.5	54	50.5	39	11.5	5.4	2.1	5	12	7.5	41.5	30
44÷49	57	65.5	56	52.5	41	11.5	5.4	2.1	5	13	8.5	42.5	31
50	64	72.5	69	56.5	45	11.5	5.4	2.1	5	13	8.5	46.5	35
55	64	72.5	74	58.5	47	11.5	5.4	2.1	5	13	8.5	48.5	37
60	72	79.3	80	60.5	49	11.5	5.4	2.1	5	13.5	8.5	48.5	37
65	77	84.5	87	62.5	51	11.5	5.4	2.1	5	13.5	8.5	50.5	39
70	82	89.5	92	62.5	51	11.5	5.4	2.1	5	13.5	8.5	50.5	39
75	87	94.5	97	68.5	57	11.5	5.4	2.1	5	13.5	8.5	57.5	46
80	92	99.5	102	70.5	59	11.5	5.4	2.1	5	13.5	8.5	59.5	48
85	98	105.5	110	72.5	59	13.5	5.4	2.6	5	13.5	8.5	59.5	46
90	105	111.5	117	75.5	62	13.5	5.4	2.6	5	13.5	8.5	62.5	49
95	110	116.5	122	75.5	62	13.5	5.4	2.6	5	13.5	8.5	64.5	51
100	114	119.5	127	88.5	75	13.5	5.4	2.6	5	13.5	8.5	78.5	65
110	124	132.2	143	92.5	75	17.5	7.1	3.9	5	13.5	8.5	78.5	61
120	134	142.2	155	102.5	85	17.5	7.1	3.9	5	13.5	8.5	90.5	73
130	145	153.2	166	112.5	95	17.5	7.1	3.9	5	13.5	8.5	99.5	82
135	152	161.2	171	113.5	95	18.5	7.1	3.9	5	13.5	8.5	101.5	83
140	157	164.3	178	118.5	100	18.5	7.1	3.9	5	13.5	8.5	108.5	90
150	167	174.2	188	128.5	110	18.5	7.1	3.9	5	13.5	8.5	118.5	100
160	188	195	199	141	120	21	9.1	3.9	5	13.5	8.5	121	100

Universal allround seal
Conical spring rotating
Massive, brazed or shrinked seal rings

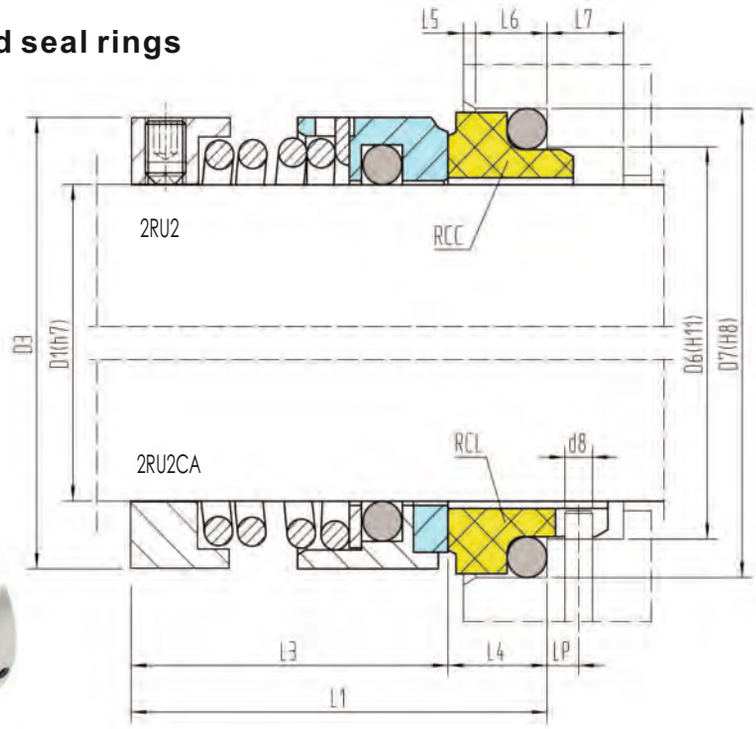

Materials:
Rotary: A, B, E, F, G, Q, U
Stationary: A, B, Q, U
Rubber parts: P, E, V, K, M

Operating limits:
(look at working conditions page 112)

p≤	12bar (16bar)
t=	-35 ÷140°C (180°C)
v≤	15 m/s

Special fitting dimensions RCC RCL

D1	D6	D7	D3	L1	L3	L4	L6	L5	D8	L7	LP
6	10.6	13.1	13.5	19.5	15	4.5	2	1.2	2	6	3.5
7	13	17.1	14.5	20.5	15	5.5	2.8	1.2	2	6.2	3.5
8	13	17.1	15.8	20.5	15	5.5	2.8	1.2	2	6.2	3.5
9	13	17.1	16.5	20.5	15	5.5	2.8	1.2	2	6.2	3.5
10	14	18.1	21	20.5	15	5.5	2.8	1.2	2	6.2	3.5
11÷12	16.5	20.6	22	23.5	18	5.5	2.8	1.2	2	6.2	3.5
13÷14	19	23.1	24	28	22	6	2.8	1.2	2	6.7	4
15	21	26.9	24	29	22	7	3.7	1.3	2.5	7.6	4
16÷17	21	26.9	26	30	23	7	3.7	1.3	2.5	7.6	4
18	25	30.9	29	32	24	8	3.7	1.3	3	8.5	4.5
19÷20	25	30.9	30	33	25	8	3.7	1.3	3	8.5	4.5
21÷22	30	35.4	34	33	25	8	3.7	1.8	3.5	8.5	5
23÷24	30	35.4	35	35	27	8	3.7	1.8	3.5	8.5	5
25÷27	33	38.2	37	35.5	27	8.5	3.7	1.8	4	9.1	5
28	38	43.3	42	38	29	9	3.7	1.8	4	9.6	6
29÷32	38	43.3	45	39	30	9	3.7	1.8	4	9.6	6
33÷34	45	53.5	45	50.5	39	11.5	5.4	2.1	5	12	7.5
35÷37	45	53.5	50	50.5	39	11.5	5.4	2.1	5	12	7.5
38÷43	52	60.5	54	50.5	39	11.5	5.4	2.1	5	12	7.5
44÷49	57	65.5	56	52.5	41	11.5	5.4	2.1	5	13	8.5
50	64	72.5	69	56.5	45	11.5	5.4	2.1	5	13	8.5
55	64	72.5	74	58.5	47	11.5	5.4	2.1	5	13	8.5
60	72	79.3	80	60.5	49	11.5	5.4	2.1	5	13.5	8.5
65	77	84.5	87	62.5	51	11.5	5.4	2.1	5	13.5	8.5
70	82	89.5	92	62.5	51	11.5	5.4	2.1	5	13.5	8.5
75	87	94.5	97	68.5	57	11.5	5.4	2.1	5	13.5	8.5
80	92	99.5	102	70.5	59	11.5	5.4	2.1	5	13.5	8.5
85	98	105.5	110	72.5	59	13.5	5.4	2.6	5	13.5	8.5
90	105	111.5	117	75.5	62	13.5	5.4	2.6	5	13.5	8.5
95	110	116.5	122	75.5	62	13.5	5.4	2.6	5	13.5	8.5
100	114	119.5	127	88.5	75	13.5	5.4	2.6	5	13.5	8.5
110	124	132.2	143	92.5	75	17.5	7.1	3.9	5	13.5	8.5
120	134	142.2	155	102.5	85	17.5	7.1	3.9	5	13.5	8.5
130	145	153.2	166	112.5	95	17.5	7.1	3.9	5	13.5	8.5
135	152	161.2	171	113.5	95	18.5	7.1	3.9	5	13.5	8.5
140	157	164.3	178	118.5	100	18.5	7.1	3.9	5	13.5	8.5
150	167	174.2	188	128.5	110	18.5	7.1	3.9	5	13.5	8.5
160	188	195	199	141	120	21	9.1	3.9	5	13.5	8.5

Simple mass-produced seal
Conical spring rotating
Massive replaceable seal rings

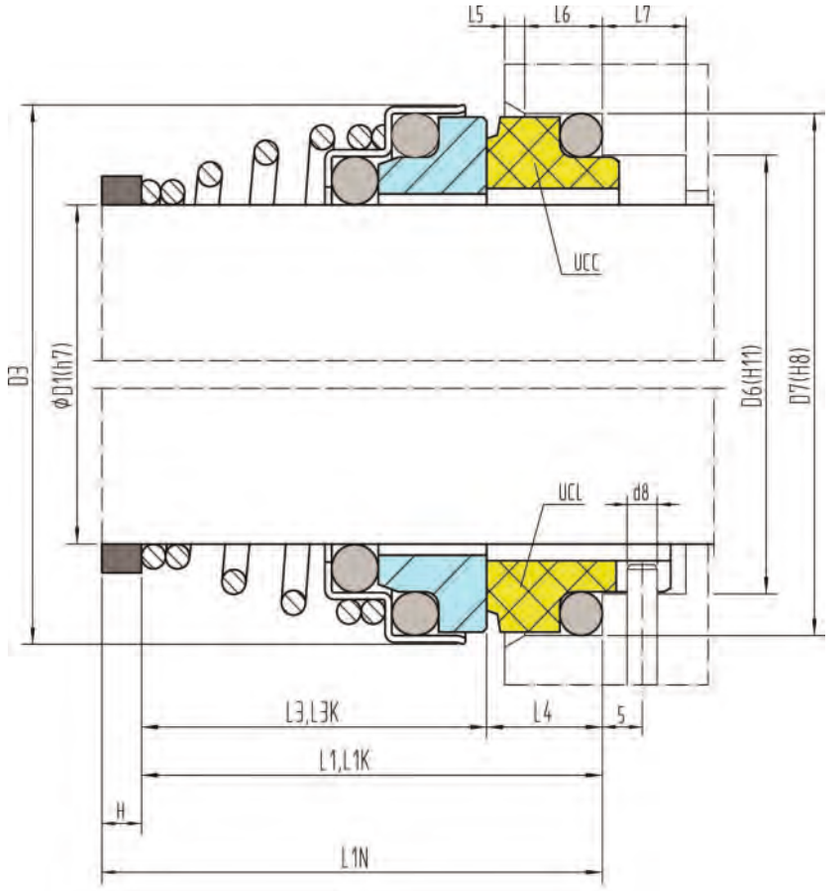

L1=L3+L4
L1K=L3K+L4
L1N=L3+H+L4

Materials:
Rotary: Q, U, V
Stationary: A, B, Q, U
Rubber parts: P, E, V, K, M

Operating limits:
(look at working conditions page 112)

p⩽	12 bar
t=	-35 ÷ 180°C
v⩽	15 m/s

EN 12756 (DIN 24960) **UCC UCL**

D1	D6	D7	D3	L1K	L3K	L1N	L1	L3	L4	L6	L5	H	D8	L7
10	17	21	20	32.5	25.5	40	22	15	7	4	1.5	18	3	8.5
12	19	23	22	32.5	25.5	40	25	18	7	4	1.5	15	3	8.5
14	21	25	25	35	28	40	29	22	7	4	1.5	11	3	8.5
16	23	27	29	35	28	40	30	23	7	4	1.5	10	3	8.5
18	27	33	33	37.5	27.5	45	34	24	10	5	2	11	3	9
20	29	35	33	37.5	27.5	45	35	25	10	5	2	10	3	9
22	31	37	38	37.5	27.5	45	35	25	10	5	2	10	3	9
24	33	39	38	40	30	50	37	27	10	5	2	13	3	9
25	34	40	40	40	30	50	37	27	10	5	2	13	3	9
28	37	43	46	42.5	32.5	50	39	29	10	5	2	11	3	9
30	39	45	46	42.5	32.5	50	40	30	10	5	2	10	3	9
32	42	48	46	42.5	32.5	55	40	30	10	5	2	15	3	9
33	42	48	48	42.5	32.5	55	49	39	10	5	2	6	3	9
35	44	50	50	42.5	32.5	55	49	39	10	5	2	6	3	9
38	49	56	56	45	32	55	55	42	13	6	2	—	4	9
40	51	58	58	45	32	55	55	42	13	6	2	—	4	9

Spacer ring is not included in the delivery of the mechanical seal.

Simple mass-produced seal
Conical spring rotating
Massive replaceable seal rings

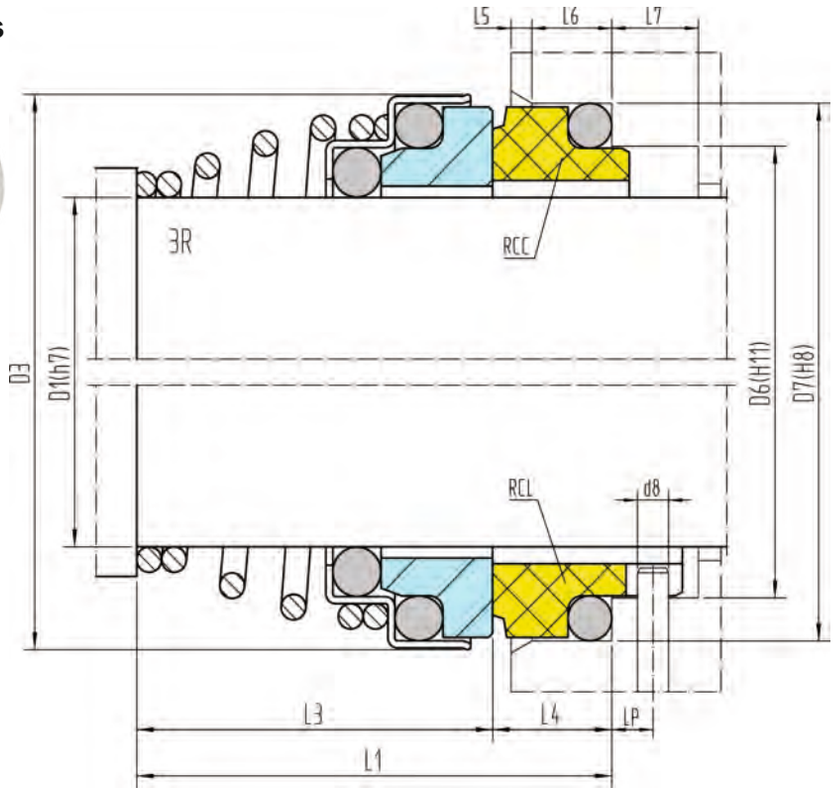

Materials:
Rotary: Q, U, V
Stationary: A, B, Q, U
Rubber parts: P, E, V, K, M

Operating limits:
(look at working conditions page 112)

p≤	12 bar
t=	-35 ÷ 180°C
v≤	15 m/s

Special fitting dimensions								RCC RCL			
D1	D6	D7	D3	L1	L3	L4	L6	L5	D8	L7	Lp
9	—	—	—	—	—	—	—	—	—	—	—
10	14	18.1	20	20.5	15	5.5	2.8	1.2	2	6.2	3.5
11÷12	16.5	20.6	22	23.5	18	5.5	2.8	1.2	2	6.2	3.5
13÷14	19	23.1	25	28	22	6	2.8	1.2	2	6.7	4
15	21	26.9	25	29	22	7	3.7	1.3	2.5	7.6	4
16÷17	21	26.9	29	30	23	7	3.7	1.3	2.5	7.6	4
18	25	30.9	33	32	24	8	3.7	1.3	3	8.5	4.5
19÷20	25	30.9	33	33	25	8	3.7	1.3	3	8.5	4.5
21÷22	30	35.4	38	33	25	8	3.7	1.8	3.5	8.5	5
23÷24	30	35.4	38	35	27	8	3.7	1.8	3.5	8.5	5
25÷27	33	38.2	40	35.5	27	8.5	3.7	1.8	4	9.1	5
28	38	43.3	46	38	29	9	3.7	1.8	4	9.6	6
29÷32	38	43.3	46	39	30	9	3.7	1.8	4	9.6	6
33	45	53.5	48	50.5	39	11.5	5.4	2.1	5	12	7.5
35	45	53.5	50	50.5	39	11.5	5.4	2.1	5	12	7.5
38	52	60.5	56	50.5	39	11.5	5.4	2.1	5	12	7.5
40	52	60.5	58	50.5	39	11.5	5.4	2.1	5	12	7.5

3RS							
D1	D6	D7	L1	L3	L4	L6	H
9	15.8	20	23.4	17.7	5.7	3.5	—
10	15.5	19.2	22.6	16.6	6	3.5	—
12	16.5	21.5	24.3	18	6.3	3.8	—
—	—	—	—	—	—	—	—
—	—	—	—	—	—	—	—
16	21	26	29.5	23	6.3	3.7	—
18	27	33	40	30	8	5	—
20	28	33.6	45	25	8	5	12
—	—	—	—	—	—	—	—
—	—	—	—	—	—	—	—
25	30.4	36	33.5	26	7.5	5	—
—	—	—	—	—	—	—	—
30	39.2	45	35.5	25.5	10	5	—
—	—	—	—	—	—	—	—
—	—	—	—	—	—	—	—
—	—	—	—	—	—	—	—
40	52.2	58	45.5	32.5	13	5	—

Self cleaning allround seal
Conical spring rotating
Massive seal rings
Food and pharmaceutical industry

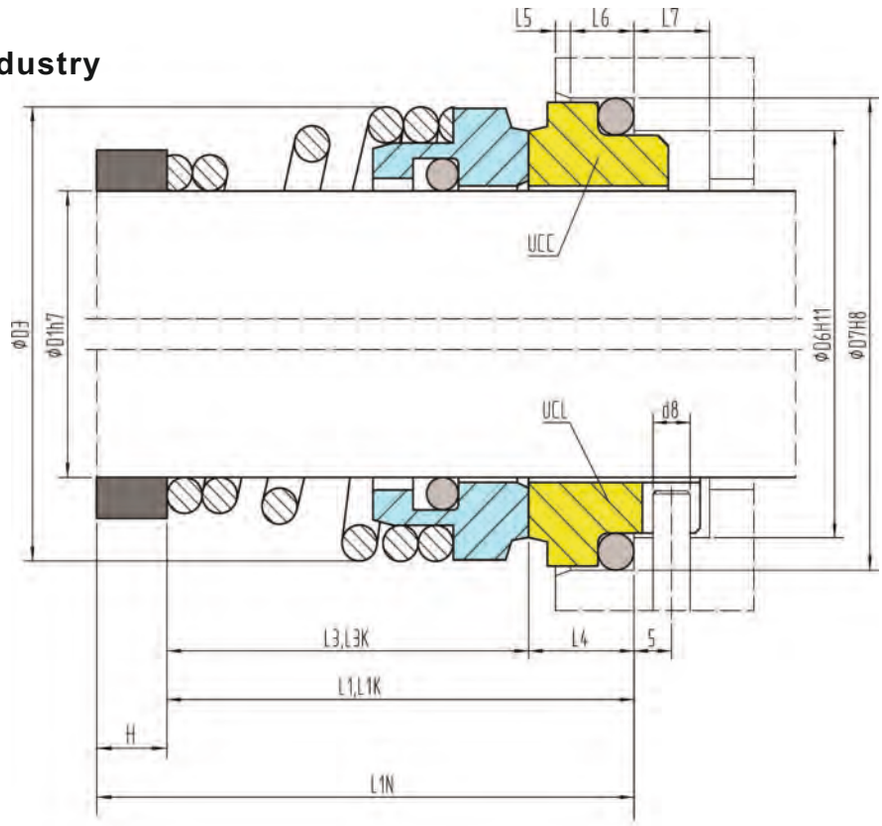

Materials:
Rotary: Q, U, V
Stationary: A, B, Q
Rubber parts: P, E, V, K

L1=L3+L4
L1K=L3K+L4
L1N=L3+H+L4

Operating limits:
(look at working conditions page 112)

p⩽	16 bar
t=	-35 ÷ 180°C
v⩽	15 m/s

EN 12756 (DIN 24960) — **UCC UCL**

D1	D6	D7	D3	L1K	L3K	L1N	L1	L3	L4	L6	L5	H	D8	L7
10	17	21	22	32.5	25.5	40	22	15	7	4	1.5	18	3	8.5
12	19	23	24	32.5	25.5	40	25	18	7	4	1.5	15	3	8.5
14	21	25	26	35	28	40	29	22	7	4	1.5	11	3	8.5
16	23	27	28	35	28	40	30	23	7	4	1.5	10	3	8.5
18	27	33	33	37.5	27.5	45	34	24	10	5	2	11	3	9
20	29	35	35	37.5	27.5	45	35	25	10	5	2	10	3	9
22	31	37	37	37.5	27.5	45	35	25	10	5	2	10	3	9
24	33	39	39	40	30	50	37	27	10	5	2	13	3	9
25	34	40	41	40	30	50	37	27	10	5	2	13	3	9
28	37	43	44	42.5	32.5	50	39	29	10	5	2	11	3	9
30	39	45	46	42.5	32.5	50	40	30	10	5	2	10	3	9
32	42	48	48	42.5	32.5	55	40	30	10	5	2	15	3	9
33	42	48	50	42.5	32.5	55	49	39	10	5	2	6	3	9
35	44	50	52	42.5	32.5	55	49	39	10	5	2	6	3	9
38	49	56	56	45	32	55	55	42	13	6	2	—	4	9
40	51	58	58	45	32	55	55	42	13	6	2	—	4	9
43	54	61	62	45	32	60	60	47	13	6	2	—	4	9
45	56	63	64	45	32	60	60	47	13	6	2	—	4	9
48	59	66	67	45	32	60	60	47	13	6	2	—	4	9
50	62	70	69	47.5	33.5	60	60	46	14	6	2.5	—	4	9
53	65	73	72	47.5	33.5	70	70	56	14	6	2.5	—	4	9
55	67	75	75	47.5	33.5	70	70	56	14	6	2.5	—	4	9
58	70	78	80	52.5	38.5	70	70	56	14	6	2.5	—	4	9
60	72	80	82	52.5	38.5	70	70	56	14	6	2.5	—	4	9
63	75	83	85	52.5	38.5	70	70	56	14	6	2.5	—	4	9
65	77	85	87	52.5	38.5	80	80	66	14	6	2.5	—	4	9
68	81	90	91	52.5	36.5	80	80	64	16	7	2.5	—	4	9
70	83	92	93	60	44	80	80	64	16	7	2.5	—	4	9
75	88	97	101	60	44	80	80	64	16	7	2.5	—	4	9
80	95	105	106	60	42	90	90	72	18	7	3	—	4	9
85	100	110	115	60	42	90	90	72	18	7	3	—	4	9
90	105	115	120	65	42	90	90	72	18	7	3	—	4	9
95	110	120	—	65	42	90	90	72	18	7	3	—	4	9
100	115	125	—	65	42	90	90	72	18	7	3	—	4	9

Spacer ring is not included in the delivery of the mechanical seal.


B70
Fert.-Nr. / Serial No.
73131 000054
Pumpwerk nicht ex-geschützt
Lutz
97877 Wertheim
Germany

Shipping and industrial seal
Cylindrical spring rotating
Massive or shrinked seal rings

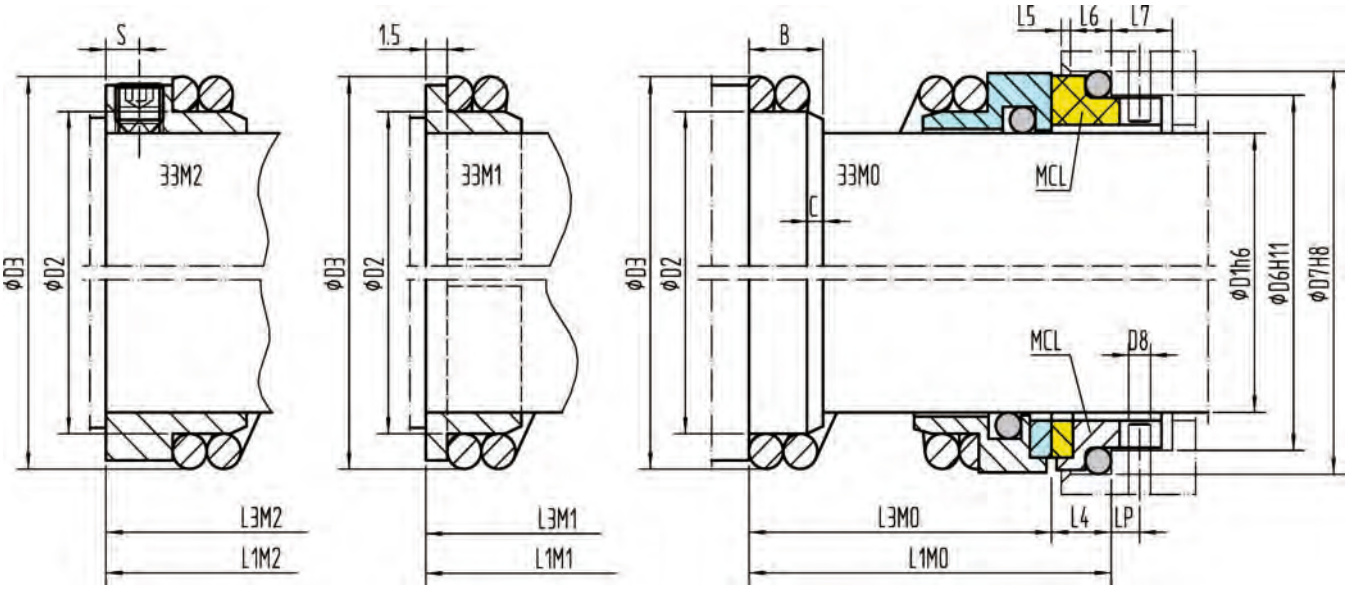

Materials:
Rotary: A, B, Q
Stationary: Q,U, V
Rubber parts: P, E, V, K, M

Operating limits:
(look at working conditions page 112)

33M0-33M1-33M2
p≤ 16 bar
t = -35 ÷140°C (180°C)
v≤ 15 m/s

Metric dimensions — MCL

D1	D6	D7	D2	D3	L1MO	L3MO	B	L1M1	L3M1	L1M2	L3M2	S	L4	L6	L5	C	LP
10	14.78	19.05	12.70	-	30.00	21.00	5.00	32.00	23.00	38.00	29.00	4.0	9.00	2.90	1.50	1.60	4
15	22.71	26.97	17.47	29.00	31.50	22.50	5.50	33.50	24.50	40.00	31.00	4.0	9.00	2.90	1.50	1.60	4
18	25.90	30.17	20.62	32.50	33.50	24.50	6.50	35.00	26.00	41.50	32.50	4.0	9.00	2.90	1.50	1.60	4
20	29.06	33.32	23.80	34.50	35.00	26.00	7.00	36.50	27.50	44.50	35.50	4.7	9.00	2.90	1.50	1.60	4
21	29.06	33.32	23.80	34.90	35.00	26.00	7.00	36.50	27.50	44.50	35.50	4.7	9.00	2.90	1.50	1.60	4
22	30.66	34.93	25.40	34.90	35.00	26.00	7.00	36.50	27.50	44.50	35.50	4.7	9.00	2.90	1.50	1.60	4
24	32.23	36.5	26.97	41.00	35.00	26.00	7.00	36.50	27.50	44.50	35.50	4.7	9.00	2.90	1.50	1.60	4
25	33.84	39.85	28.57	41.00	40.00	30.00	7.50	41.50	31.50	49.00	39.00	4.7	10.00	4.00	1.50	1.60	4
26	33.84	39.85	28.57	42.00	40.00	30.00	7.50	41.50	31.50	49.00	39.00	4.7	10.00	4.00	1.50	1.60	4
28	37.01	43.05	31.75	42.90	41.50	31.50	8.50	43.00	33.00	51.00	41.00	4.7	10.00	4.00	1.50	1.60	4
30	38.61	44.63	33.32	45.50	41.50	31.50	8.50	43.00	33.00	51.00	41.00	4.7	10.00	4.00	1.50	1.60	4
32	40.28	46.32	34.92	47.00	44.50	34.50	9.00	46.00	36.00	54.00	44.00	4.7	10.00	4.00	1.50	1.60	4
35	43.46	49.48	38.10	50.00	47.50	37.50	10.00	49.00	39.00	57.00	47.00	4.7	10.00	4.00	1.50	1.60	4
38	46.63	52.56	42.88	53.00	47.50	37.50	10.00	49.00	39.00	57.00	47.00	4.7	10.00	4.00	1.50	1.60	4
40	48.13	54.25	44.45	55.00	47.50	37.50	10.00	49.00	39.00	57.00	47.00	4.7	10.00	4.00	1.50	1.60	4
45	52.98	59.02	49.20	60.00	47.50	37.50	10.50	49.00	39.00	57.00	47.00	4.7	10.00	4.00	1.50	1.60	4
48	57.66	63.68	52.37	62.00	52.50	42.50	11.50	54.00	44.00	65.00	55.00	6.5	10.00	4.00	1.50	1.60	5
50	59.33	65.37	53.97	66.00	55.50	42.50	12.00	57.00	47.00	68.50	58.50	6.5	10.00	4.00	1.50	1.60	5
55	64.01	70.03	58.72	71.00	57.00	47.00	13.00	58.50	48.50	70.00	60.00	6.5	10.00	4.00	1.50	1.60	5
60	70.36	76.38	65.07	77.00	60.50	50.50	14.00	62.00	52.00	73.00	63.00	6.5	10.00	4.00	1.50	1.60	5
65	75.21	81.23	69.85	82.00	63.50	53.50	14.00	65.00	55.00	76.00	66.00	6.5	10.00	4.00	1.50	1.60	5
70	79.88	85.90	74.60	87.00	63.50	53.50	14.00	65.00	55.00	76.00	66.00	6.5	10.00	4.00	1.50	1.60	5
75	84.73	90.77	79.37	91.50	66.50	56.50	14.00	70.00	60.00	81.00	71.00	7.0	10.00	4.00	1.50	1.60	5
80	94.26	100.29	85.73	-	73.00	-	14.00	76.00	-	87.50	-	7.0	-	4.00	1.50	1.60	5
85	98.93	104.95	90.47	-	73.00	-	14.00	76.00	-	87.50	-	7.0	-	4.00	1.50	1.60	5
90	103.78	109.82	95.25	-	78.00	-	17.00	81.00	-	92.00	-	7.0	-	4.00	1.50	1.60	5
95	108.46	114.48	100.00	-	78.00	-	17.50	81.00	-	92.00	-	7.0	-	4.00	1.50	3.20	5
100	113.31	119.33	104.77	-	78.00	-	17.50	81.00	-	92.00	-	7.0	-	4.00	1.50	3.20	5

Inch dimensions — MCL

D1 Zoll	D6	D7	D2	D3	L1 RMO	L3 RMO	B	L1 RM1	L3 RM1	L1 RM2	L3 RM2	S	L4	L5	L6	C	LP
0,375	0.582	0.750	0.500	-	1.190	0.84	0.19	1.250	0.896	1.500	1.146	0.16	0.354	0.059	0.111	0.06	0.16
0,500	0.769	0.937	0.625	-	1.250	0.896	0.25	1.310	0.956	1.560	1.206	0.16	0.354	0.059	0.111	0.06	0.16
0,625	0.957	1,125	0.750	1,142	1.310	0.956	0.25	1.380	1.026	1.630	1.276	0.16	0.354	0.059	0.111	0.06	0.16
0,750	1.082	1,250	0.875	1,280	1.310	0.956	0.31	1.380	1.026	1.630	1.276	0.16	0.354	0.059	0.111	0.06	0.16
0,875	1.207	1,375	1.000	1,375	1.380	1,026	0.31	1.440	1.086	1.750	1.396	0.19	0.354	0.059	0.111	0.06	0.16
1,000	1.332	1,569	1.125	1,500	1.560	1,166	0.31	1.630	1.236	1.940	1.546	0.19	0.394	0.059	0.161	0.06	0.16
1,125	1.457	1,695	1.250	1,687	1.630	1,236	0.37	1.690	1,296	2.000	1.606	0.19	0.394	0.059	0.161	0.06	0.16
1,250	1.586	1,824	1.375	1,811	1.750	1,356	0.37	1.810	1,416	2.130	1.736	0.19	0.394	0.059	0.161	0.06	0.16
1,375	1.711	1,948	1.500	1,937	1.880	1,486	0.44	1.940	1.546	2.250	1.856	0.19	0.394	0.059	0.161	0.06	0.16
1,500	1.836	2,069	1.688	2,063	1.880	1,486	0.44	1.940	1.546	2.250	1.856	0.19	0.394	0.059	0.161	0.06	0.16
1,625	1,961	2.198	1.812	2,185	1.880	1,486	0.44	1.940	1.546	2.250	1.856	0.19	0.394	0.059	0.161	0.06	0.16
1,750	2.086	2,324	1.937	2,313	1.880	1,486	0.44	1.940	1.546	2.250	1.856	0.19	0.394	0.059	0.161	0.06	0.16
1,875	2,270	2,507	2.062	2,437	2.060	1,666	0.50	2.130	1.736	2.250	1.856	0.25	0.394	0.059	0.161	0.06	0.19
2,000	2,395	2,632	2.188	2,625	2.190	1,796	0.50	2.250	1.856	2.690	2.296	0.25	0.394	0.059	0.161	0.06	0.19
2,125	2,520	2,757	2.312	2,750	2.250	1,856	0.56	2.310	1.916	2.750	2.356	0.25	0.394	0.059	0.161	0.06	0.19
2,250	2,645	2,882	2.437	2,875	2.250	1,856	0.56	2.310	1.916	2.750	2.356	0.25	0.394	0.059	0.161	0.06	0.19
2,375	2,770	3,007	2.562	3,000	2.380	1,986	0.56	2.440	2.046	2.880	2.486	0.25	0.394	0.059	0.161	0.06	0.19
2,500	2,895	3,132	2.688	3,125	2.380	1,986	0.56	2.440	2.046	2.880	2.486	0.25	0.394	0.059	0.161	0.06	0.19
2,625	3,020	3,257	2.812	3,250	2.500	2,106	0.56	2.560	2.166	3.000	2.606	0.25	0.394	0.059	0.161	0.06	0.19
2,750	3,145	3,382	2.937	3,375	2.500	2,106	0.56	2.560	2.166	3.000	2.606	0.25	0.394	0.059	0.161	0.06	0.19
3,000	3,520	3,757	3.188	3,750	2.880	2,486	0.63	3.000	2.606	3.440	3.046	0.28	0.394	0.059	0.161	0.06	0.19
3,125	3,645	3,882	3.312	-	2.880	2,486	0.63	3.000	2.606	3.440	3.046	0.28	0.394	0.059	0.161	0.06	0.19
3,250	3,770	4,007	3.437	-	2.880	2,486	0.63	3.000	2.606	3.440	3.046	0.28	0.394	0.059	0.161	0.06	0.19
3,500	4,020	4,257	3.688	-	2.880	2,486	0.69	3.000	2.606	3.440	3.046	0.28	0.394	0.059	0.161	0.06	0.19
3,750	4,270	4,507	3.937	-	3.060	2,666	0.75	3.190	2.796	3.630	3.236	0.28	0.394	0.059	0.161	0.12	0.19
4,000	4,645	4,882	4.250	-	3.250	2,856	0.75	3.380	2.986	3.880	3.486	0.31	0.394	0.059	0.161	0.12	0.19
4,250	4,895	5,132	4.500	-	3.250	2,856	0.75	3.380	2.986	3.880	3.486	0.31	0.394	0.059	0.161	0.12	0.19
4,500	5,145	5,382	4.750	-	3.250	2,856	0.75	3.380	2.986	3.880	3.486	0.31	0.394	0.059	0.161	0.12	0.19

Universal seal for demanding applications
Conical spring rotating
Massive replaceable seal rings
Vibrationpractica

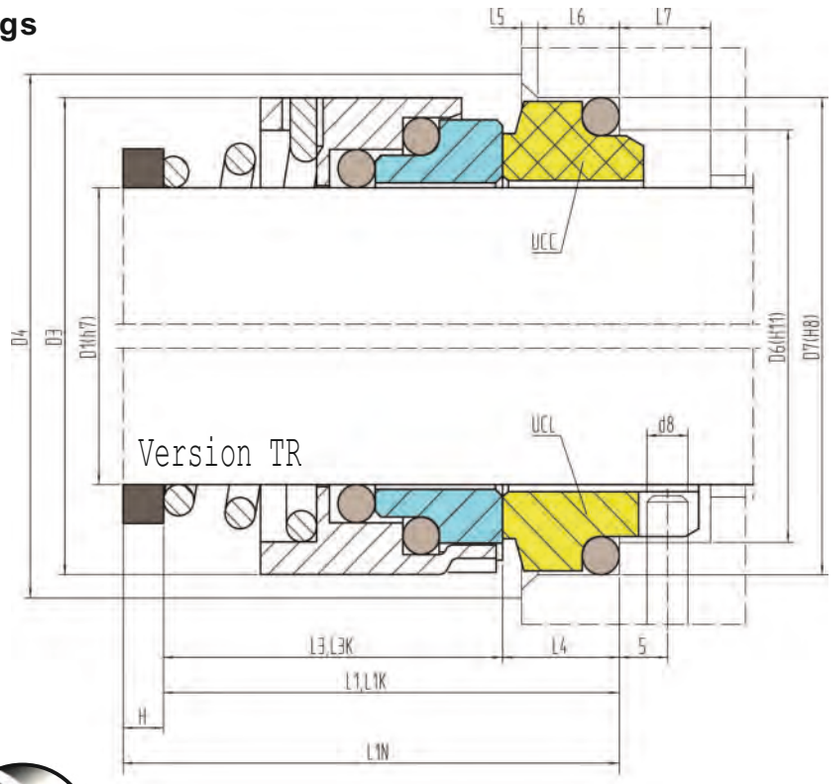

Materials:
Rotary: Q, U, V
Stationary: A, B, Q, U
Rubber parts: P, E, V, K, M

L1=L3+L4
L1K=L3K+L4
L1N=L3+H+L4

Operating limits:
(look at working conditions page 112)

p⩽	16 bar
t=	-35 ÷ 180°C
v⩽	15 m/s

EN 12756 (DIN 24960) **UCC UCL**

D1	D6	D7	D3	D4	L1K	L3K	L1N	L1	L3	L4	L6	L5	H	D8	L7
10	17	21	21.5	22	32.5	25.5	40	22	15	7	4	1.5	18	3	8.5
12	19	23	22.5	24	32.5	25.5	40	25	18	7	4	1.5	15	3	8.5
14	21	25	24.5	26	35	28	40	29	22	7	4	1.5	11	3	8.5
16	23	27	28.5	30+	35	28	40	30	23	7	4	1.5	10	3	8.5
18	27	33	32.5	34	37.5	27.5	45	34	24	10	5	2	11	3	9
20	29	35	32.5	36	37.5	27.5	45	35	25	10	5	2	10	3	9
22	31	37	37	38	37.5	27.5	45	35	25	10	5	2	10	3	9
24	33	39	37	40	40	30	50	37	27	10	5	2	13	3	9
25	34	40	41	41	40	30	50	37	27	10	5	2	13	3	9
28	37	43	47	48+	42.5	32.5	50	39	29	10	5	2	11	3	9
30	39	45	47	48+	42.5	32.5	50	40	30	10	5	2	10	3	9
32	42	48	47	48	42.5	32.5	55	40	30	10	5	2	15	3	9
33	42	48	48	49	42.5	32.5	55	49	39	10	5	2	6	3	9
35	44	50	57	58+	42.5	32.5	55	49	39	10	5	2	6	3	9
38	49	56	64	65+	45	32	55	55	42	13	6	2	—	4	9
40	51	58	64	65+	45	32	55	55	42	13	6	2	—	4	9
43	54	61	64	65+	45	32	60	60	47	13	6	2	—	4	9
45	56	63	69	70+	45	32	60	60	47	13	6	2	—	4	9
48	59	66	69	70+	45	32	60	60	47	13	6	2	—	4	9
50	62	70	75	76+	47.5	33.5	60	60	46	14	6	2.5	—	4	9
53	65	73	75	76+	47.5	33.5	70	70	56	14	6	2.5	—	4	9
55	67	75	75	75	47.5	33.5	70	70	56	14	6	2.5	—	4	9
58	70	78	83	83	52.5	38.5	70	70	56	14	6	2.5	—	4	9
60	72	80	83	85	52.5	38.5	70	70	56	14	6	2.5	—	4	9
63	75	83	88	88	52.5	38.5	70	70	56	14	6	2.5	—	4	9
65	77	85	88	90	52.5	38.5	80	80	66	14	6	2.5	—	4	9
68	81	90	93	93	52.5	36.5	80	80	64	16	7	2.5	—	4	9
70	83	92	93	95	60	44	80	80	64	16	7	2.5	—	4	9
75	88	97	98	104	60	44	80	80	64	16	7	2.5	—	4	9
80	95	105	104	109	60	42	90	90	72	18	7	3	—	4	9
85	100	110	110	114	60	42	90	90	72	18	7	3	—	4	9
90	105	115	116	119	65	42	90	90	72	18	7	3	—	4	9
95	110	120	123	124	65	42	90	90	72	18	7	3	—	4	9
100	115	125	127	129	65	42	90	90	72	18	7	3	—	4	9

+ This size is larger than the minimum prescribed by EN 12756
Spacer ring is not included in the delivery of the mechanical seal.

Universal seal for demanding applications
Conical spring rotating
Massive replaceable seal rings
Massive frame
Vibration practical

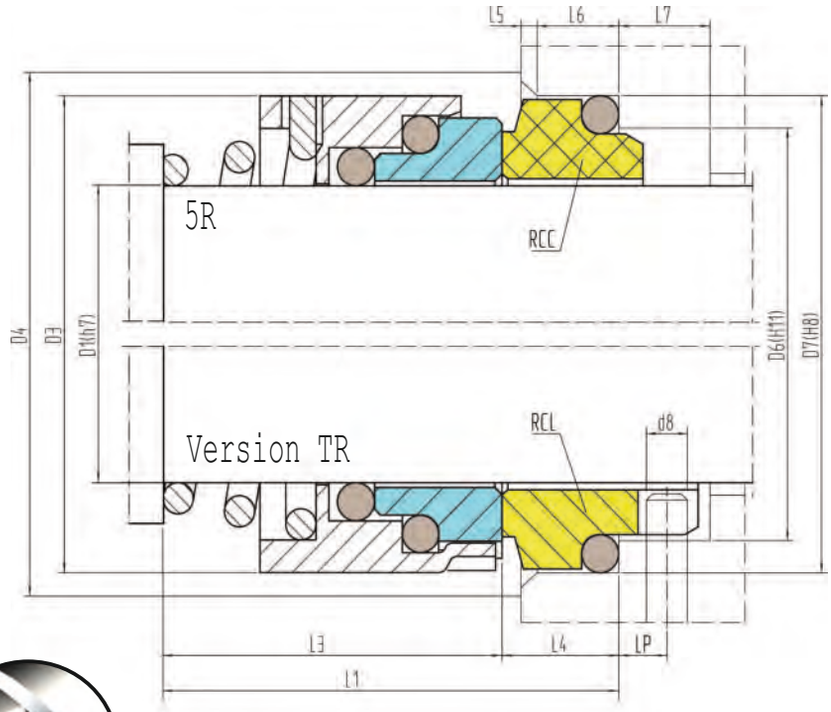

Materials:
Rotary: Q, U, V
Stationary: A, B, Q, U
Rubber parts: P, E, V, K, M

Operating limits:
(look at working conditions page 112)

p≤	16 bar
t=	-35 ÷ 180°C
v≤	15 m/s

Special fitting dimensions										RCC	RCL		5RH2 RCC RCL	
D1	**D6**	**D7**	**D3**	**D4**	**L1**	**L3**	**L4**	**L6**	**L5**	**D8**	**L7**	**Lp**	**L1**	**L3**
10	14	18.1	21.5	22	25.5	20	5.5	2.8	1.2	2	6.2	3.5	20.5	15
11	16.5	20.6	21.5	25	27.5	22	5.5	2.8	1.2	2	6.2	3.5	23.5	18
12	16.5	20.6	22.5	25	27.5	22	5.5	2.8	1.2	2	6.2	3.5	23.5	18
13	19	23.1	22.5	27	33	27	6	2.8	1.2	2	6.7	4	28	22
14	19	23.1	24.5	27	33	27	6	2.8	1.2	2	6.7	4	28	22
15	21	26.9	24.5	32	34	27	7	3.7	1.3	2.5	7.6	4	29	22
16	21	26.9	28.5	32	35	28	7	3.7	1.3	2.5	7.6	4	30	23
17	21	26.9	28.5	32	35	28	7	3.7	1.3	2.5	7.6	4	30	23
18	25	30.9	32.5	36	38	30	8	3.7	1.3	3	8.5	4.5	32	24
19÷20	25	30.9	32.5	36	38	30	8	3.7	1.3	3	8.5	4.5	33	25
21÷22	30	35.4	37	41	38	30	8	3.7	1.8	3.5	8.5	5	33	25
23÷24	30	35.4	37	41	40	32	8	3.7	1.8	3.5	8.5	5	35	27
25÷27	33	38.2	41	45	41.5	33	8.5	3.7	1.8	4	9.1	5	35.5	27
28	38	43.3	47	50	45	36	9	3.7	1.8	4	9.6	6	38	29
29÷32	38	43.3	47	50	46	37	9	3.7	1.8	4	9.6	6	39	30
33÷37	45	53.5	48	62	59.5	48	11.5	5.4	2.1	5	12	7.5	50.5	39
38÷43	52	60.5	64	70	59.5	48	11.5	5.4	2.1	5	12	7.5	50.5	39
44÷49	57	65.5	64	75	62.5	51	11.5	5.4	2.1	5	13	8.5	52.5	41
50	64	72.5	75	83	66.5	55	11.5	5.4	2.1	5	13	8.5	56.5	45
55	64	72.5	75	83	68.5	57	11.5	5.4	2.1	5	13	8.5	58.5	47
60	72	79.3	83	90	72.5	61	11.5	5.4	2.1	5	13.5	8.5	60.5	49
65	77	84.5	88	96	74.5	63	11.5	5.4	2.1	5	13.5	8.5	62.5	51
70	82	89.5	93	101	74.5	63	11.5	5.4	2.1	5	13.5	8.5	62.5	51
75	87	94.5	98	106	79.5	68	11.5	5.4	2.1	5	13.5	8.5	68.5	57
80	92	99.5	104	111	81.5	70	11.5	5.4	2.1	5	13.5	8.5	70.5	59
85	98	105.5	110	125	85.5	72	13.5	5.4	2.6	5	13.5	8.5	72.5	59
90	105	111.5	116	130	88.5	75	13.5	5.4	2.6	5	13.5	8.5	75.5	62
95	110	116.5	123	137	88.5	75	13.5	5.4	2.6	5	13.5	8.5	75.5	62
100	114	119.5	127	143	98.5	85	13.5	5.4	2.6	5	13.5	8.5	88.5	75
110	124	132.2	-	166	106.5	89	17.5	7.1	3.9	5	13.5	8.5	92.5	75
120	134	142.2	-	176	114.5	97	17.5	7.1	3.9	5	13.5	8.5	102.5	85
130	145	153.2	-	190	125.5	108	17.5	7.1	3.9	5	13.5	8.5	112.5	95
140	157	164.3	-	210	128.5	110	18.5	7.1	3.9	5	13.5	8.5	118.5	100
150	167	174.2	-	220	138.5	120	18.5	7.1	3.9	5	13.5	8.5	128.5	110

82K-82KCA

Robust norm seal
Massive seal ring frame with flushing whole for self-cleaning
Massive, brazed or shrinked seal rings

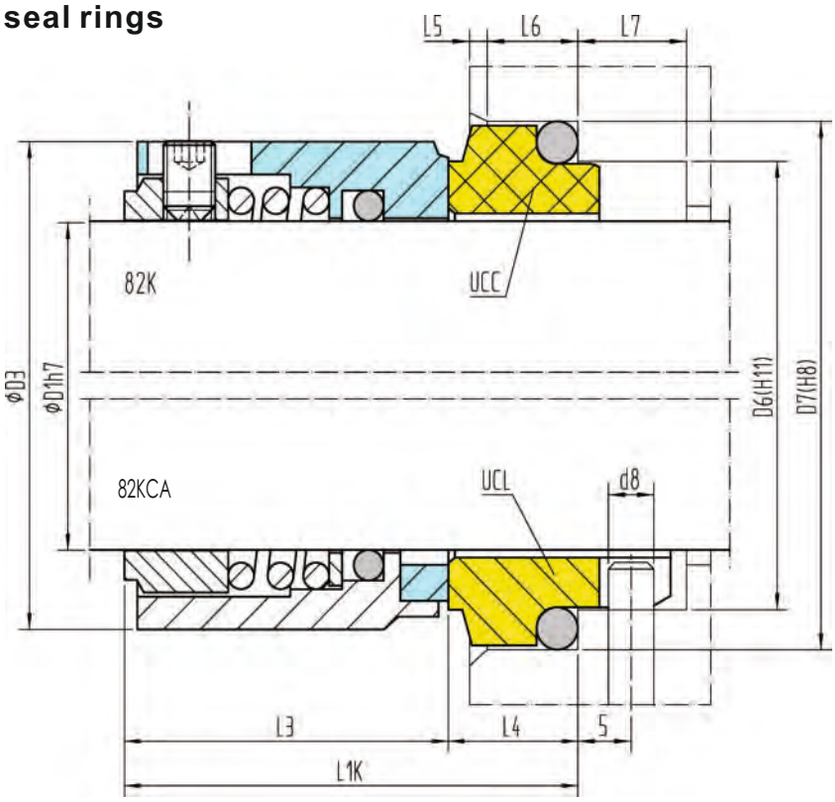

Materials:
Rotary: E, F, G, Q, U
Stationary: A, B, Q, U
Rubber parts: P, E, V, K, M

Operating limits:
(look at working conditions page 99)

82K	82KCA
p≤ 12 bar	p≤ 16 bar
t = -35 ÷ 180°C	t = -35 ÷ 140°C
v≤ 15 m/s	v≤ 15 m/s

EN 12756 (DIN 24960)									UCC	UCL
D1	**D6**	**D7**	**D3**	**L1K**	**L3**	**L4**	**L6**	**L5**	**D8**	**L7**
10	17	21	21	32.5	25.5	7	4	1.5	3	8.5
12	19	23	22	32.5	25.5	7	4	1.5	3	8.5
14	21	25	24	35	28	7	4	1.5	3	8.5
16	23	27	26	35	28	7	4	1.5	3	8.5
18	27	33	29	37.5	27.5	10	5	2	3	9
20	29	35	30	37.5	27.5	10	5	2	3	9
22	31	37	34	37.5	27.5	10	5	2	3	9
24	33	39	35	40	30	10	5	2	3	9
25	34	40	37	40	30	10	5	2	3	9
28	37	43	42	42.5	32.5	10	5	2	3	9
30	39	45	45	42.5	32.5	10	5	2	3	9
32	42	48	45	42.5	32.5	10	5	2	3	9
33	42	48	48	42.5	32.5	10	5	2	3	9
35	44	50	50	42.5	32.5	10	5	2	3	9
38	49	56	54	45	32	13	6	2	4	9
40	51	58	56	45	32	13	6	2	4	9
43	54	61	60	45	32	13	6	2	4	9
45	56	63	64	45	32	13	6	2	4	9
48	59	66	67	45	32	13	6	2	4	9
50	62	70	69	47.5	33.5	14	6	2.5	4	9
53	65	73	74	47.5	33.5	14	6	2.5	4	9
55	67	75	74	47.5	33.5	14	6	2.5	4	9
58	70	78	80	52.5	38.5	14	6	2.5	4	9
60	72	80	80	52.5	38.5	14	6	2.5	4	9
63	75	83	87	52.5	38.5	14	6	2.5	4	9
65	77	85	87	52.5	38.5	14	6	2.5	4	9
68	81	90	92	52.5	36.5	16	7	2.5	4	9
70	83	92	92	60	44	16	7	2.5	4	9
75	88	97	97	60	44	16	7	2.5	4	9
80	95	105	102	60	42	18	7	3	4	9
85	100	110	110	60	42	18	7	3	4	9
90	105	115	117	65	47	18	7	3	4	9
95	110	120	122	65	47	18	7	3	4	9
100	115	125	127	65	47	18	7	3	4	9

Robust norm seal
Massive seal ring frame with flushing whole for self-cleaning
Massive, brazed or shrinked seal rings

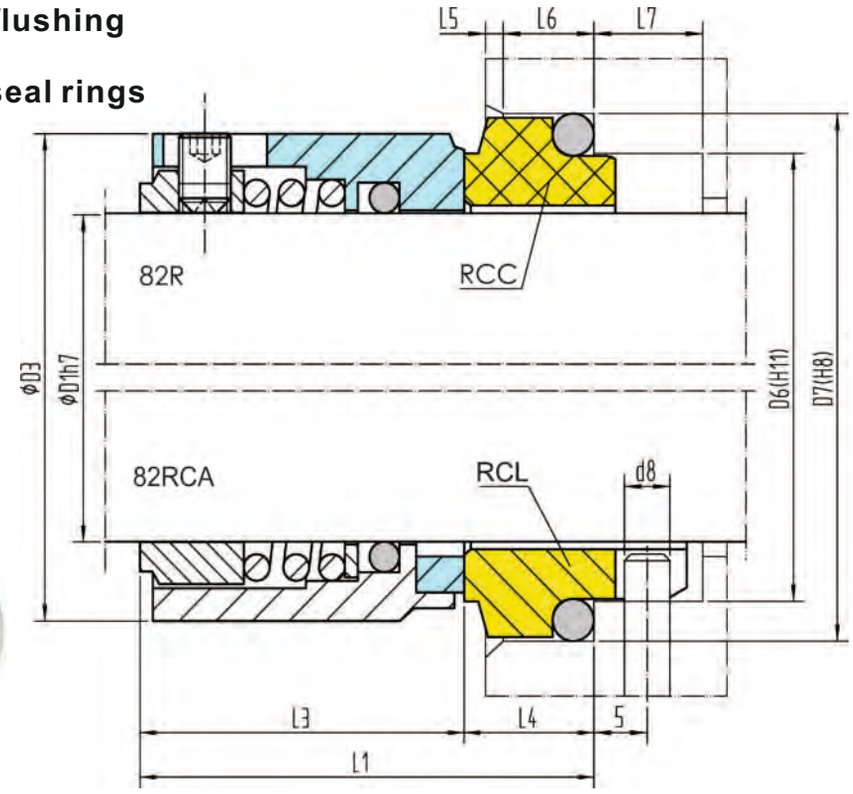

Materials:
Rotary: E, F, G, Q, U
Stationary: A, B, Q, U
Rubber parts: P, E, V, K, M

Operating limits:
(look at working conditions page 112)

82R	82RCA
p≤ 12 bar	p≤ 16 bar
t = -35 ÷ 180°C	t = -35 ÷ 140°C
v≤ 15 m/s	v≤ 15 m/s

Special fitting dimensions RCC RCL

D1	D6	D7	D3	L1	L3	L4	L6	L5	D8	L7
10	14	18.1	21	20.5	15	5.5	2.8	1.2	2	6.2
11	16.5	20.6	21	23.5	18	5.5	2.8	1.2	2	6.2
12	16.5	20.6	22	23.5	18	5.5	2.8	1.2	2	6.2
14	19	23.1	24	28	22	6	2.8	1.2	2	6.7
16	21	26.9	26	30	23	7	3.7	1.3	2.5	7.6
18	25	30.9	29	32	24	8	3.7	1.3	3	8.5
19	25	30.9	30	33	25	8	3.7	1.3	3	8.5
20	25	30.9	30	33	25	8	3.7	1.3	3	8.5
22	30	35.4	34	33	25	8	3.7	1.8	3.5	8.5
24	30	35.4	35	35	27	8	3.7	1.8	3.5	8.5
25	33	38.2	37	35.5	27	8.5	3.7	1.8	4	9.1
28	38	43.3	42	38	29	9	3.7	1.8	4	9.6
29	38	43.3	42	38	29	9	3.7	1.8	4	9.6
30	38	43.3	45	38	29	9	3.7	1.8	4	9.6
32	38	43.3	45	38	29	9	3.7	1.8	4	9.6
33	45	53.5	48	44.5	33	11.5	5.4	2.1	5	12
35	45	53.5	50	46.5	35	11.5	5.4	2.1	5	12
38	52	60.5	54	46.5	35	11.5	5.4	2.1	5	12
40	52	60.5	56	46.5	35	11.5	5.4	2.1	5	12
42	52	60.5	59	46.5	35	11.5	5.4	2.1	5	12
43	52	60.5	60	46.5	35	11.5	5.4	2.1	5	12
44	57	65.5	60	48.5	37	11.5	5.4	2.1	5	13
45	57	65.5	64	48.5	37	11.5	5.4	2.1	5	13
48	57	65.5	67	48.5	37	11.5	5.4	2.1	5	13
50	64	72.5	69	50.5	39	11.5	5.4	2.1	5	13
55	64	72.5	74	50.5	39	11.5	5.4	2.1	5	13
60	72	79.3	80	51.5	40	11.5	5.4	2.1	5	13.5
65	77	84.5	87	52,5	41	11.5	5.4	2.1	5	13.5
70	82	89.5	92	52,5	41	11.5	5.4	2.1	5	13.5
75	87	94.5	97	55.5	44	11.5	5.4	2.1	5	13.5
80	92	99.5	102	59.5	48	11.5	5.4	2.1	5	13.5
85	98	105.5	110	61.5	48	13.5	5.4	2.6	5	13.5
90	105	111.5	117	61.5	48	13.5	5.4	2.6	5	13.5
95	110	116.5	122	66.5	53	13.5	5.4	2.6	5	13.5
100	114	119.5	127	69.5	56	13.5	5.4	2.6	5	13.5
110	124	132.2	143	81.5	64	17.5	7.1	3.9	5	13.5
120	134	142.2	155	97.5	80	17.5	7.1	3.9	5	13.5
130	145	153.2	166	97.5	80	17.5	7.1	3.9	5	13.5

Universal norm seal
Massive replaceable seal rings
Super-sinus-spring or multiple springs

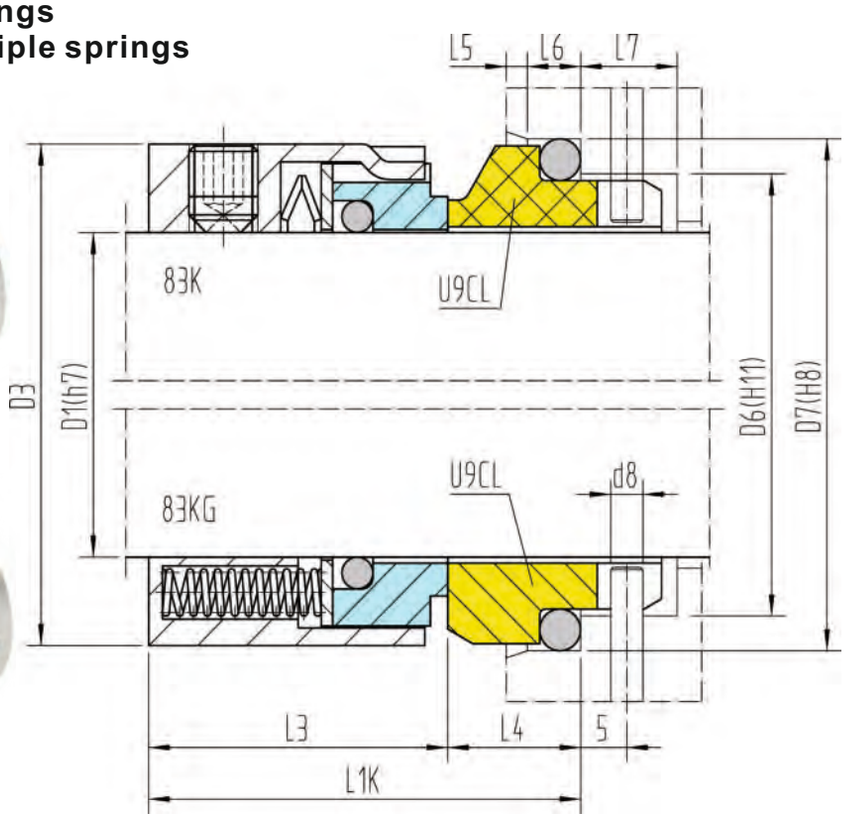

Materials:
Rotary: E, F, G, Q, U
Stationary: A, B, Q, U
Rubber parts: P, E, V, K, M

Operating limits:
(look at working conditions page 112)

p≤	25 bar
t=	-35 ÷ 200°C
v≤	15 m/s

EN 12756 (DIN 24960)										U9CL
D1	**D6**	**D7**	**D3**	**L1K**	**L3**	**L4**	**L6**	**L5**	**D8**	**L7**
14	21	25	25	35	25	10	4	1.5	3	8.5
16	23	27	27	35	25	10	4	1.5	3	8.5
18	27	33	33	37.5	26	11.5	5	2	3	9
20	29	35	35	37.5	26	11.5	5	2	3	9
22	31	37	37	37.5	26	11.5	5	2	3	9
24	33	39	39	40	28.5	11.5	5	2	3	9
25	34	40	40	40	28.5	11.5	5	2	3	9
28	37	43	43	42.5	31	11.5	5	2	3	9
30	39	45	45	42.5	31	11.5	5	2	3	9
32	42	48	47	42.5	31	11.5	5	2	3	9
33	42	48	48	42.5	31	11.5	5	2	3	9
35	44	50	50	42.5	31	11.5	5	2	3	9
38	49	56	55	45	31	14	6	2	4	9
40	51	58	57	45	31	14	6	2	4	9
43	54	61	60	45	31	14	6	2	4	9
45	56	63	62	45	31	14	6	2	4	9
48	59	66	65	45	31	14	6	2	4	9
50	62	70	67	47.5	32.5	15	6	2.5	4	9
53	65	73	70	47.5	32.5	15	6	2.5	4	9
55	67	75	72	47.5	32.5	15	6	2.5	4	9
58	70	78	79	52.5	37.5	15	6	2.5	4	9
60	72	80	81	52.5	37.5	15	6	2.5	4	9
63	75	83	84	52.5	37.5	15	6	2.5	4	9
65	77	85	86	52.5	37.5	15	6	2.5	4	9
68	81	90	89	52.5	34.5	18	7	2.5	4	9
70	83	92	91	60	42	18	7	2.5	4	9
75	88	97	99	60	42	18	7	2.5	4	9
80	95	105	104	60	41.8	18.2	7	3	4	9
85	100	110	109	60	41.8	18.2	7	3	4	9
90	105	115	114	65	46.8	18.2	7	3	4	9
95	110	120	119	65	47.8	17.2	7	3	4	9
100	115	125	124	65	47.8	17.2	7	3	4	9

Universal norm seal with pumping screw
Massive replaceable seal rings
Super-sinus-spring or
Multiple springs

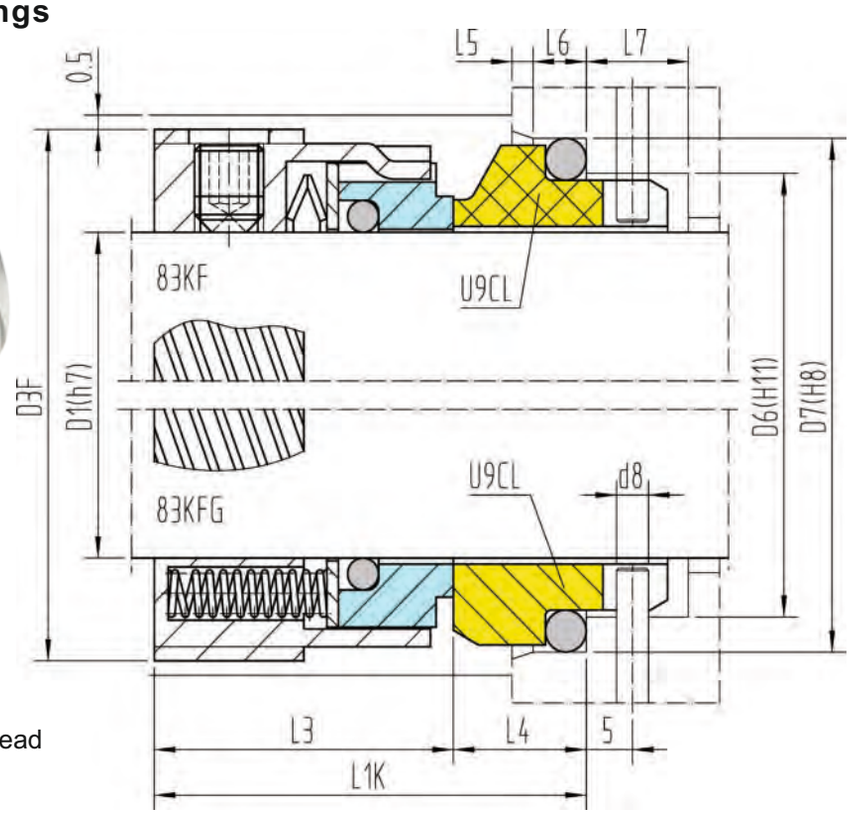

Note the direction of rotation of the thread
page 121

Materials:
Rotary: E, F, G, Q, U
Stationary: A, B, Q, U
Rubber parts: P, E, V, K, M

Operating limits:
(look at working conditions page 112)

p≤	25 bar
t=	-35 ÷ 200°C
v≤	15 m/s

EN 12756 (DIN 24960)										U9CL
D1	**D6**	**D7**	**D3F**	**L1K**	**L3**	**L4**	**L6**	**L5**	**D8**	**L7**
14	21	25	34	35	25	10	4	1.5	3	8.5
16	23	27	36	35	25	10	4	1.5	3	8.5
18	27	33	38	37.5	26	11.5	5	2	3	9
20	29	35	40	37.5	26	11.5	5	2	3	9
22	31	37	42	37.5	26	11.5	5	2	3	9
24	33	39	44	40	28.5	11.5	5	2	3	9
25	34	40	45	40	28.5	11.5	5	2	3	9
28	37	43	47	42.5	31	11.5	5	2	3	9
30	39	45	49	42.5	31	11.5	5	2	3	9
32	42	48	51	42.5	31	11.5	5	2	3	9
33	42	48	51	42.5	31	11.5	5	2	3	9
35	44	50	54	42.5	31	11.5	5	2	3	9
38	49	56	59	45	31	14	6	2	4	9
40	51	58	61	45	31	14	6	2	4	9
43	54	61	65	45	31	14	6	2	4	9
45	56	63	66	45	31	14	6	2	4	9
48	59	66	69	45	31	14	6	2	4	9
50	62	70	71	47.5	32.5	15	6	2.5	4	9
53	65	73	75	47.5	32.5	15	6	2.5	4	9
55	67	75	76	47.5	32.5	15	6	2.5	4	9
58	70	78	83	52.5	37.5	15	6	2.5	4	9
60	72	80	85	52.5	37.5	15	6	2.5	4	9
63	75	83	88	52.5	37.5	15	6	2.5	4	9
65	77	85	95	52.5	37.5	15	6	2.5	4	9
68	81	90	93	52.5	34.5	18	7	2.5	4	9
70	83	92	95	60	42	18	7	2.5	4	9
75	88	97	105	60	42	18	7	2.5	4	9
80	95	105	109	60	41.8	18.2	7	3	4	9
85	100	110	114	60	41.8	18.2	7	3	4	9
90	105	115	119	65	46.8	18.2	7	3	4	9
95	110	120	124	65	47.8	17.2	7	3	4	9
100	115	125	129	65	47.8	17.2	7	3	4	9

Universal seal
Massive replaceable seal rings
Super-sinus-spring

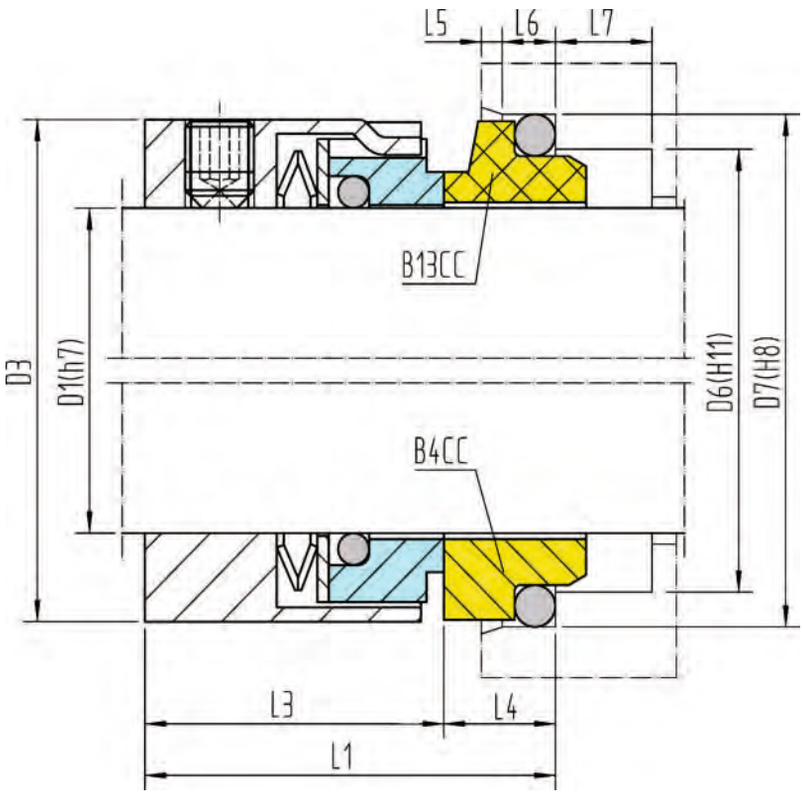

Materials:
Rotary: E, F, G, Q, U
Stationary: A, B, Q, U
Rubber parts: P, E, V, K, M

Operating limits:
(look at working conditions page 112)

p⩽	25 bar
t=	-35 ÷ 200°C
v⩽	15 m/s

Special fitting dimensions									B13CC		
								B4CC			
D1	D6	D7	D3	L1	L3	L4	L6	L5	L1	L3	L4
14	20.5	24.6	25.0	30.6	25.0	5.6	4.0	1.5	32.6	25.0	7.6
16	22.0	28.0	27.0	32.5	25.0	7.5	4.0	1.5	34.0	25.0	9.0
18	24.0	30.0	33.0	34.0	26.0	8.0	5.0	2.0	36.0	26.0	10.0
20	29.5	35.0	35.0	33.5	26.0	7.5	5.0	2.0	35.5	26.0	9.5
22	29.5	35.0	37.0	33.5	26.0	7.5	5.0	2.0	35.5	26.0	9.5
24	32.0	38.0	39.0	36.0	28.5	7.5	5.0	2.0	38.0	28.5	9.5
25	32.0	38.0	40.0	36.0	28.5	7.5	5.0	2.0	38.0	28.5	9.5
28	36.0	42.0	43.0	40.0	31.0	9.0	5.0	2.0	42.0	31.0	11.0
30	39.2	45.0	45.0	41.5	31.0	10.5	5.0	2.0	42.0	31.0	11.0
32	42.5	48.0	47.0	41.5	31.0	10.5	5.0	2.0	42.0	31.0	11.0
33	44.2	50.0	48.0	41.5	31.0	10.5	5.0	2.0	42.5	31.0	11.5
35	46.2	52.0	50.0	42.0	31.0	11.0	5.0	2.0	42.5	31.0	11.5
38	49.2	55.0	55.0	41.3	31.0	10.3	5.0	2.0	42.5	31.0	11.5
40	52.2	58.0	57.0	41.8	31.0	10.8	5.0	2.0	42.5	31.0	11.5
43	53.3	62.0	60.0	43.0	31.0	12.0	6.0	2.0	45.3	31.0	14.3
45	55.3	64.0	62.0	42.6	31.0	11.6	6.0	2.0	45.3	31.0	14.3
48	59.7	68.4	65.0	42.6	31.0	11.6	6.0	2.0	45.3	31.0	14.3
50	60.8	69.3	67.0	44.1	32.5	11.6	6.0	2.5	46.8	32.5	14.3
53	63.8	72.3	70.0	44.8	32.5	12.3	6.0	2.5	46.8	32.5	14.3
55	66.5	75.4	72.0	45.8	32.5	13.3	6.0	2.5	47.8	32.5	15.3
58	69.5	78.4	79.0	50.8	37.5	13.3	6.0	2.5	52.8	37.5	15.3
60	71.5	80.4	81.0	50.8	37.5	13.3	6.0	2.5	52.8	37.5	15.3
63	74.5	83.4	84.0	50.8	37.5	13.3	6.0	2.5	52.8	37.5	15.3
65	76.5	85.4	86.0	50.5	37.5	13.0	6.0	2.5	52.8	37.5	15.3
68	82.7	91.5	89.0	48.2	34.5	13.7	7.0	2.5	50.5	34.5	16.0
70	83.0	92.0	91.0	55.0	42.0	13.0	7.0	2.5	57.3	42.0	15.3
75	90.2	99.0	99.0	56.0	42.0	14.0	7.0	2.5	57.3	42.0	15.3
80	95.2	104.0	104.0	56.8	41.8	15.0	7.0	3.0	58.1	41.8	16.3
85	100.2	109.0	109.0	56.6	41.8	14.8	7.0	3.0	58.1	41.8	16.3
90	105.2	114.0	114.0	61.6	46.8	14.8	7.0	3.0	63.1	46.8	16.3
95	111.6	120.3	119.0	63.6	47.8	15.8	7.0	3.0	65.1	47.8	17.3
100	114.5	123.3	124.0	63.6	47.8	15.8	7.0	3.0	65.1	47.8	17.3

Shorter norm seal
Massive replaceable seal rings
Super-sinus-spring
Shorter fitting length
Optionally available with delivery thread

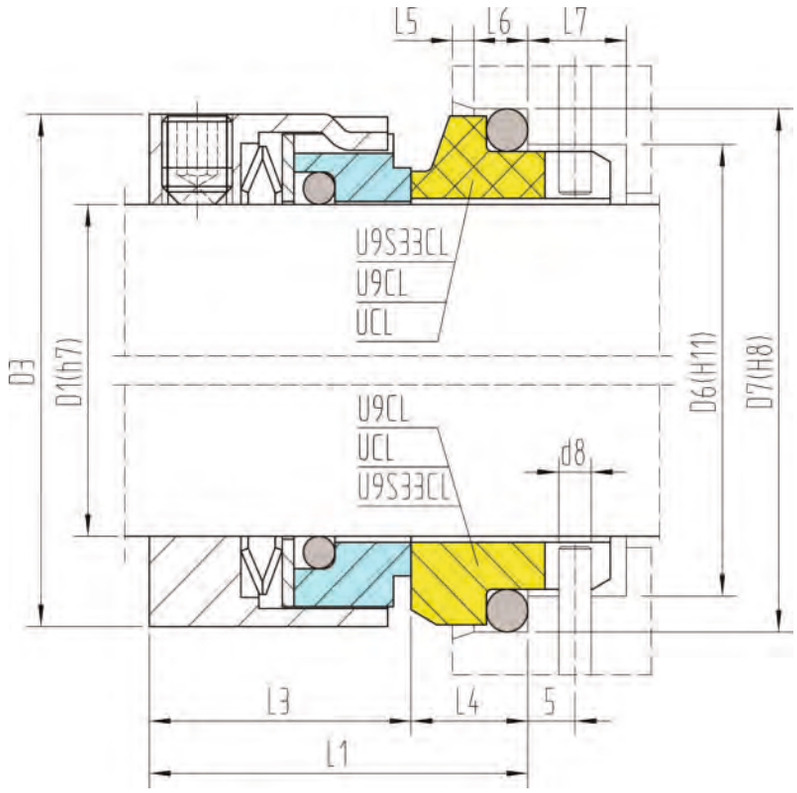

Materials:
Rotary: E, F, G, Q, U
Stationary: A, B, Q, U
Rubber parts: P, E, V, K, M

Operating limits:
(look at working conditions page 112)

p⩽	16 bar
t=	-35 ÷ 200°C
v⩽	15 m/s

EN 12756 (DIN24960)

D1	D6	D7	D3	L1	L3	L4	L6	L5	D8	L7	Typ
14	21	25	25	28	21	7	4	1.5	3	8.5	UCL
16	23	27	28	28	21	7	4	1.5	3	8.5	UCL
18	27	33	33	30.5	20.5	10	5	2	3	9	UCL
20	29	35	35	30.5	20.5	10	5	2	3	9	UCL
22	31	37	37	30.5	20.5	10	5	2	3	9	UCL
24	33	39	39	32.5	22.5	10	5	2	3	9	UCL
25	34	40	40	33.5	22	11.5	5	2	3	9	U9CL
28	37	43	43	33.5	22	11.5	5	2	3	9	U9CL
30	39	45	45	34.5	23	11.5	5	2	3	9	U9CL
32	42	48	47	34.5	23	11.5	5	2	3	9	U9CL
33	42	48	48	34.5	23	11.5	5	2	3	9	U9CL
35	44	50	50	34.5	23	11.5	5	2	3	9	U9CL
38	49	56	55	38	24	14	6	2	4	9	U9CL
40	51	58	57	39	25	14	6	2	4	9	U9CL
43	54	61	60	39	28	11	6	2	4	9	U9S33CL
45	56	63	62	39	28	11	6	2	4	9	U9S33CL
48	59	66	65	39	25	14	6	2	4	9	U9CL
50	62	70	67	40	28	12	6	2.5	4	9	U9S33CL
53	65	73	70	40	26	14	6	2.5	4	9	UCL
55	67	75	72	40	25	15	6	2.5	4	9	U9CL
58	70	78	79	42	31	11	6	2.5	4	9	U9S33CL
60	72	80	81	42	31	11	6	2.5	4	9	U9S33CL
63	75	83	84	45	30	15	6	2.5	4	9	U9CL
65	77	85	86	45	32	13	6	2.5	4	9	U9S33CL
70	83	92	91	47	34	13	7	2.5	4	9	U9S33CL
75	88	97	99	47	31	16	7	2.5	4	9	UCL
80	95	105	104	48	32	16	7	3	4	9	U9S33CL
85	100	110	109	48	32	16	7	3	4	9	U9S33CL
90	105	115	114	54	35.8	18.2	7	3	4	9	U9CL
95	110	120	119	54	36.8	17.2	7	3	4	9	U9CL
100	115	125	124	54	36.8	17.2	7	3	4	9	U9CL

Robust norm seal
Massive replaceable seal rings
Super-sinus-spring
Optionally available with delivery thread

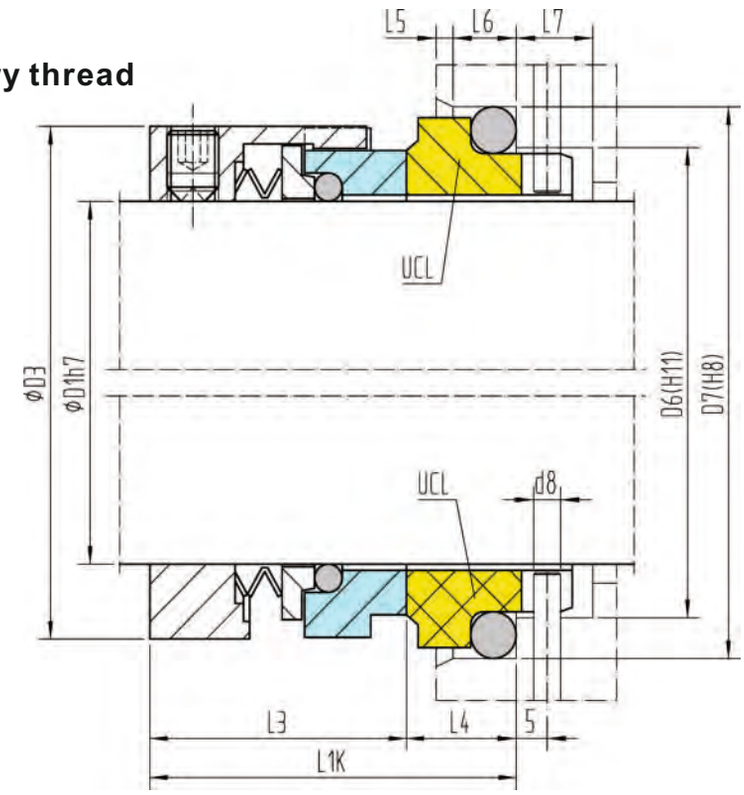

Materials:
Rotary: E, F, G, Q, U
Stationary: A, B, Q, U
Rubber parts: P, E, V, K, M

Operating limits:
(look at working conditions page 112)

p⩽	16 bar
t=	-35 ÷ 200°C
v⩽	15 m/s

EN 12756 (DIN 24960)										UCL
D1	**D6**	**D7**	**D3**	**L1K**	**L3**	**L4**	**L6**	**L5**	**D8**	**L7**
14	21	25	25	35	28	7	4	1.5	3	8.5
16	23	27	27	35	28	7	4	1.5	3	8.5
18	27	33	31	37.5	27.5	10	5	2	3	9
20	29	35	33	37.5	27.5	10	5	2	3	9
22	31	37	37	37.5	27.5	10	5	2	3	9
24	33	39	39	40	30	10	5	2	3	9
25	34	40	40	40	30	10	5	2	3	9
28	37	43	43	42.5	32.5	10	5	2	3	9
30	39	45	45	42.5	32.5	10	5	2	3	9
32	42	48	47	42.5	32.5	10	5	2	3	9
33	42	48	48	42.5	32.5	10	5	2	3	9
35	44	50	50	42.5	32.5	10	5	2	3	9
38	49	56	55	45	32	13	6	2	4	9
40	51	58	57	45	32	13	6	2	4	9
43	54	61	60	45	32	13	6	2	4	9
45	56	63	62	45	32	13	6	2	4	9
48	59	66	66	45	32	13	6	2	4	9
50	62	70	68	47.5	33.5	14	6	2.5	4	9
53	65	73	71	47.5	33.5	14	6	2.5	4	9
55	67	75	74	47.5	33.5	14	6	2.5	4	9
58	70	78	79	52.5	38.5	14	6	2.5	4	9
60	72	80	82	52.5	38.5	14	6	2.5	4	9
63	75	83	85	52.5	38.5	14	6	2.5	4	9
65	77	85	87	52.5	38.5	14	6	2.5	4	9
68	81	90	92	52.5	36.5	16	7	2.5	4	9
70	83	92	92	60	44	16	7	2.5	4	9
75	88	97	99	60	44	16	7	2.5	4	9
80	95	105	105	60	42	18	7	3	4	9
85	100	110	110	60	42	18	7	3	4	9
90	105	115	116	65	47	18	7	3	4	9
95	110	120	121	65	47	18	7	3	4	9
100	115	125	126	65	47	18	7	3	4	9

Universal norm seal
Massive seal rings
Multiple springs
Vibration practica

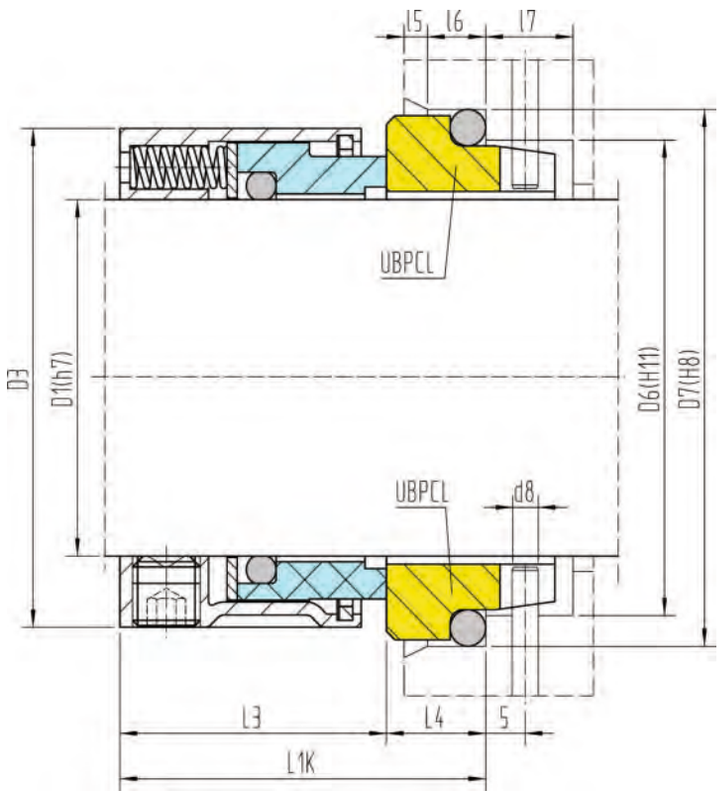

Materials:
Rotary: A, B, Q, U
Stationary: Q, U, V
Rubber parts: P, E, V, K, M

Operating limits:
(look at working conditions page 112)

p⩽	16 bar
t=	-35 ÷ 200°C
v⩽	15 m/s

EN 12756 (DIN 24960) **UBPCL**

D1	D6	D7	D3	L1K	L3	L4	L6	L5	D8	L7
14	21	25	24	35	23	12	4	1.5	3	8.5
16	23	27	26	35	23	12	4	1.5	3	8.5
18	27	33	32	37.5	24	13.5	5	2	3	9
20	29	35	34	37.5	24	13.5	5	2	3	9
22	31	37	36	37.5	24	13.5	5	2	3	9
24	33	39	38	40	26.5	13.5	5	2	3	9
25	34	40	39	40	27	13	5	2	3	9
28	37	43	42	42.5	30	12.5	5	2	3	9
30	39	45	44	42.5	30.5	12	5	2	3	9
32	42	48	46	42.5	30.5	12	5	2	3	9
33	42	48	47	42.5	30.5	12	5	2	3	9
35	44	50	49	42.5	30.5	12	5	2	3	9
38	49	56	54	45	32	13	6	2	4	9
40	51	58	56	45	32	13	6	2	4	9
43	54	61	59	45	32	13	6	2	4	9
45	56	63	61	45	32	13	6	2	4	9
48	59	66	64	45	32	13	6	2	4	9
50	62	70	66	47.5	34	13.5	6	2.5	4	9
53	65	73	69	47.5	34	13.5	6	2.5	4	9
55	67	75	71	47.5	34	13.5	6	2.5	4	9
58	70	78	78	52.5	39	13.5	6	2.5	4	9
60	72	80	80	52.5	39	13.5	6	2.5	4	9
63	75	83	83	52.5	39	13.5	6	2.5	4	9
65	77	85	85	52.5	39	13.5	6	2.5	4	9
68	81	90	88	52.5	39	13.5	7	2.5	4	9
70	83	92	90	60	45.5	14.5	7	2.5	4	9
75	88	97	95	60	45.5	14.5	7	2.5	4	9
80	95	105	104	60	45	15	7	3	4	9
85	100	110	109	60	45	15	7	3	4	9
90	105	115	114	65	50	15	7	3	4	9
95	110	120	119	65	50	15	7	3	4	9
100	115	125	124	65	50	15	7	3	4	9

Universal allround seal for high pressure applications
Stepped shaft/shaft sleeve
Conical spring rotating
Massive, brazed or shrinked seal rings

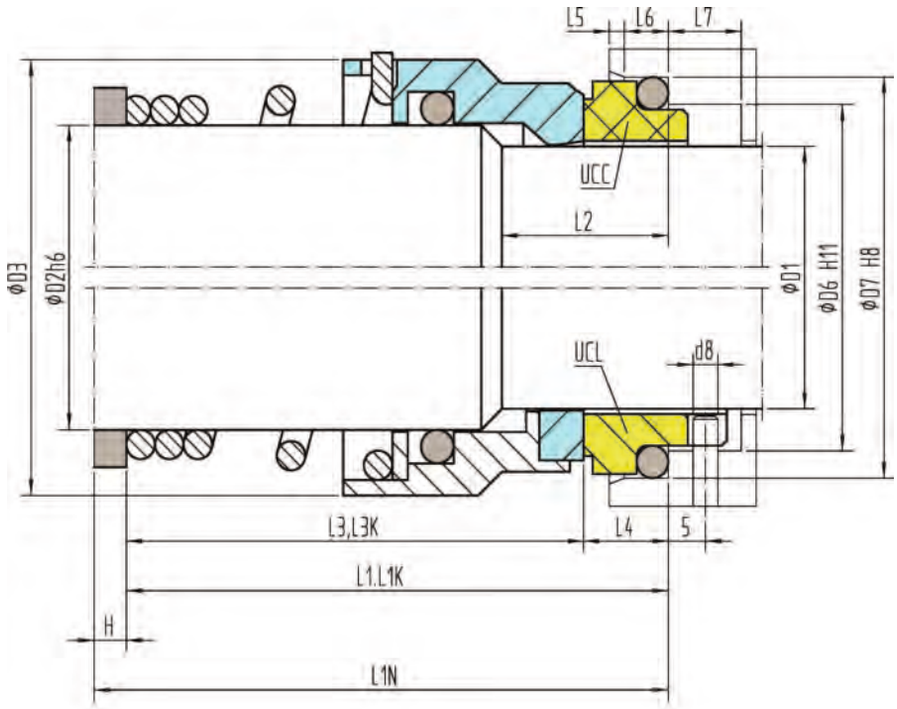

L1=L3+L4
L1K=L3K+L4
L1N=L3+H+L4

Operating limits:
(look at working conditions page 112)

E-EK-EN-ECA-EKCA-ENCA
p⩽ 25 bar
t = -35 ÷ 140°C (180°C)
v⩽ 15 m/s

Materials:
Rotary: A, B, E, F, G, Q, U
Stationary: A, B, Q, U
Rubber parts: P, E, V, K, M

EN 12756 (DIN 24960)														UCC	UCL	
D1	**D2**	**D6**	**D7**	**D3**	**L1K**	**L3K**	**L1N**	**L1**	**L3**	**L4**	**L2**	**L6**	**L5**	**H**	**D8**	**L7**
10	14	17	21	23	40	33	50	50	43	7	18	4	1.5	—	3	8.5
12	16	19	23	27	40	33	50	50	43	7	18	4	1.5	—	3	8.5
14	18	21	25	29	42.5	35.5	55	46	39	7	18	4	1.5	9	3	8.5
16	20	23	27	30	42.5	35.5	55	47	40	7	18	4	1.5	8	3	8.5
18	22	27	33	34	45	35	55	51	41	10	20	5	2	4	3	9
20	24	29	35	35	45	35	60	53	43	10	20	5	2	7	3	9
22	26	31	37	38	45	35	60	53	43	10	20	5	2	7	3	9
24	28	33	39	42	47.5	37.5	60	60	50	10	20	5	2	—	3	9
25	30	34	40	45	47.5	37.5	60	60	50	10	20	5	2	—	3	9
28	33	37	43	48	50	40	65	65	55	10	20	5	2	—	3	9
30	35	39	45	50	50	40	65	65	55	10	20	5	2	—	3	9
32	38	42	48	54	50	40	65	65	55	10	20	5	2	—	3	9
33	38	42	48	54	50	40	65	65	55	10	20	5	2	—	3	9
35	40	44	50	56	50	40	65	65	55	10	20	5	2	—	3	9
38	43	49	56	60	52.5	39.5	75	75	62	13	23	6	2	—	4	9
40	45	51	58	62	52.5	39.5	75	75	62	13	23	6	2	—	4	9
43	48	54	61	66	52.5	39.5	75	75	62	13	23	6	2	—	4	9
45	50	56	63	68	52.5	39.5	75	75	62	13	23	6	2	—	4	9
48	53	59	66	71	52.5	39.5	85	85	72	13	23	6	2	—	4	9
50	55	62	70	74	57.5	43.5	85	85	71	14	25	6	2.5	—	4	9
53	58	65	73	77	57.5	43.5	85	85	71	14	25	6	2.5	—	4	9
55	60	67	75	79	57.5	43.5	85	85	71	14	25	6	2.5	—	4	9
58	63	70	78	83	62.5	48.5	85	85	71	14	25	6	2.5	—	4	9
60	65	72	80	86	62.5	48.5	95	95	81	14	25	6	2.5	—	4	9
63	68	75	83	88	62.5	48.5	95	95	81	14	25	6	2.5	—	4	9
65	70	77	85	90	62.5	48.5	95	95	81	14	25	6	2.5	—	4	9
70	75	83	92	95	70	54	95	95	79	16	28	7	2.5	—	4	9
75	80	88	97	101	70	54	105	105	89	16	28	7	2.5	—	4	9
80	85	95	105	108	70	52	105	105	87	18	28	7	3	—	4	9
85	90	100	110	116	75	57	105	105	87	18	28	7	3	—	4	9
90	95	105	115	122	75	57	105	105	87	18	28	7	3	—	4	9
95	100	110	120	127	75	57	105	105	87	18	28	7	3	—	4	9
100	105	115	125	137	75	57	105	105	87	18	28	7	3	—	4	9

Spacer ring is not included in the delivery of the mechanical seal.

Universal allround seal for high pressure applications
Stepped shaft/shaft sleeve
Conical spring rotating
Massive, brazed or shrinked seal rings

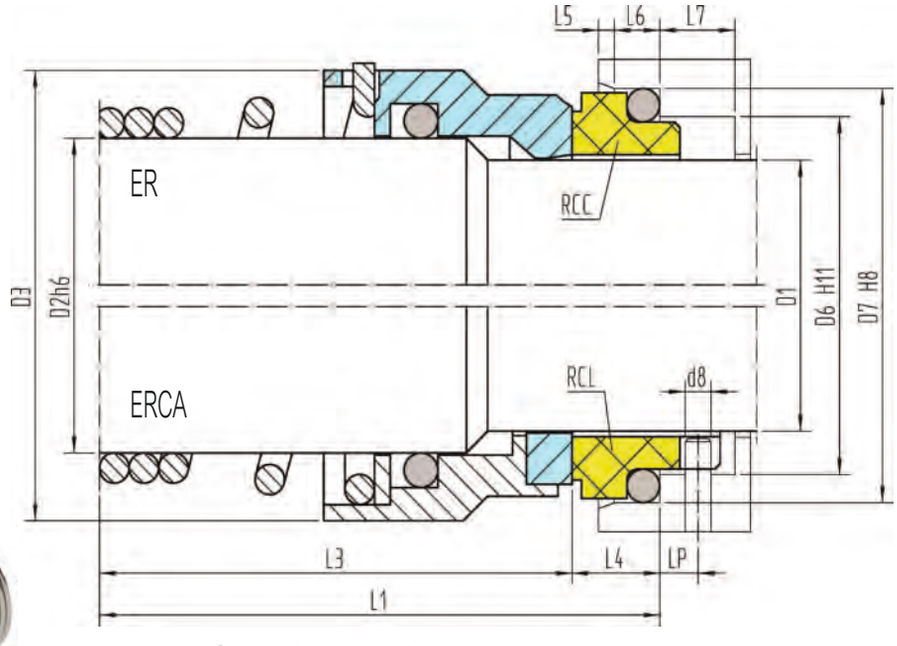

Materials:
Rotary: A, B, E, F, G, Q, U
Stationary: A, B, Q, U
Rubber parts: P, E, V, K, M

Operating limits:
(look at working conditions page 112)

ER-ERCA	
p⩽	16 bar
t=	-35 ÷ 140°C (180°C)
v⩽	15 m/s

Special fitting dimensions

D1	D2	D6	D7	D3	L1	L3	L4	L6	L5	D8	L7 RCC	Lp RCL
10	13	14	18.1	22	35.5	30	5.5	2.8	1.2	2	6.2	3.5
12	15	16.5	20.6	24	35.5	30	5.5	2.8	1.2	2	6.2	3.5
13	16	19	23.1	26	37	31	6	2.8	1.2	2	6.7	4
14	17	19	23.1	27	37	31	6	2.8	1.2	2	6.7	4
15	18	21	26.9	29	39	32	7	3.7	1.3	2.5	7.6	4
16	19	21	26.9	30	41	34	7	3.7	1.3	2.5	7.6	4
18	21	25	30.9	34	42	34	8	3.7	1.3	3	8.5	4.5
19	22	25	30.9	34	42	34	8	3.7	1.3	3	8.5	4.5
20	23	25	30.9	35	44	36	8	3.7	1.3	3	8.5	4.5
22	26	30	35.4	37.5	45	37	8	3.7	1.8	3.5	8.5	5
23	27	30	35.4	39	45	37	8	3.7	1.8	3.5	8.5	5
24	28	30	35.4	42	47	39	8	3.7	1.8	3.5	8.5	5
25	29	33	38.2	42	48.5	40	8.5	3.7	1.8	4	9.1	5
28	32	38	43.3	45	49	40	9	3.7	1.8	4	9.6	6
30	34	38	43.3	50	58	49	9	3.7	1.8	4	9.6	6
32	36	38	43.3	53	58	49	9	3.7	1.8	4	9.6	6
35	39	45	53.5	55	62.5	51	11.5	5.4	2.1	5	12	7.5
38	42	52	60.5	59	62.5	51	11.5	5.4	2.1	5	12	7.5
40	44	52	60.5	60	64.5	53	11.5	5.4	2.1	5	12	7.5
42	46	52	60.5	65	64.5	53	11.5	5.4	2.1	5	12	7.5
43	47	52	60.5	66	64.5	53	11.5	5.4	2.1	5	12	7.5
44	48	57	65.5	66	65.5	54	11.5	5.4	2.1	5	13	8.5
45	49	57	65.5	68	65.5	54	11.5	5.4	2.1	5	13	8.5
50	54	64	72.5	74	70.5	59	11.5	5.4	2.1	5	13	8.5
55	60	64	72.5	79	75.5	64	11.5	5.4	2.1	5	13	8.5
60	65	72	79.3	86	77.5	66	11.5	5.4	2.1	5	13.5	8.5
65	70	77	84.5	91	77.5	66	11.5	5.4	2.1	5	13.5	8.5
70	75	82	89.5	96	83.5	72	11.5	5.4	2.1	5	13.5	8.5
75	80	87	94.5	101	86.5	75	11.5	5.4	2.1	5	13.5	8.5
80	85	92	99.5	108	86.5	75	11.5	5.4	2.1	5	13.5	8.5
85	90	98	105.5	116	91.5	78	13.5	5.4	2.6	5	13.5	8.5
90	95	105	111.5	122	91.5	78	13.5	5.4	2.6	5	13.5	8.5
95	100	110	116.5	127	104.5	91	13.5	5.4	2.6	5	13.5	8.5
100	106	114	119.5	137	106.5	93	13.5	5.4	2.6	5	13.5	8.5
110	116	124	132.2	150	122.5	105	17.5	7.1	3.9	5	13.5	8.5
120	126	134	142.2	161	133.5	116	17.5	7.1	3.9	5	13.5	8.5
130	136	145	153.2	174	133.5	116	17.5	7.1	3.9	5	13.5	8.5
135	141	152	161.2	180	140.5	122	18.5	7.1	3.9	5	13.5	8.5
140	146	157	164.3	185	151.5	133	18.5	7.1	3.9	5	13.5	8.5
150	156	167	174.2	194	151.5	133	18.5	7.1	3.9	5	13.5	8.5
160	166	188	195	205	164	143	21	9.1	3.9	5	15.5	8.5

E1CA

Allround seal for high pressure applications
Stepped shaft/ shaft sleeve
Conical spring rotating
Shrinked seal rings

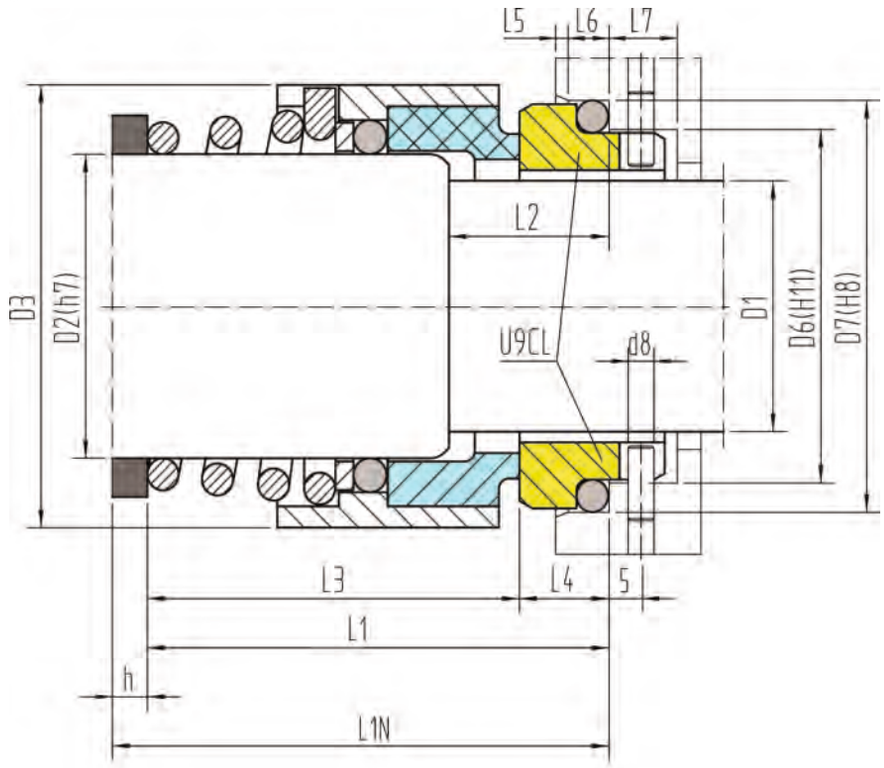

L1=L3+L4
L1N=L3+H+L4

Materials:
Rotary: A, B, Q, U
Stationary: Q, U, V
Rubber parts: P, E, V, K, M

Operating limits:
(look at working conditions page 112)

p⩽	25 bar
t=	-35 ÷ 140°C
v⩽	15 m/s

EN 12756 (DIN 24960) **U9CL**

D1	D2	D6	D7	D3	L1N	L1	L3	L4	L2	L6	L5	H	D8	L7
10	14	17	21	24	50	35.5	25.5	10	18	4	1.5	14.5	3	8.5
12	16	19	23	26	50	36.5	26.5	10	18	4	1.5	13.5	3	8.5
14	18	21	25	31	55	39.5	29.5	10	18	4	1.5	15.5	3	8.5
16	20	23	27	34	55	41	31	10	18	4	1.5	14	3	8.5
18	22	27	33	36	55	44	32.5	11.5	20	5	2	11	3	9
20	24	29	35	38	60	44	32.5	11.5	20	5	2	16	3	9
22	26	31	37	40	60	44	32.5	11.5	20	5	2	16	3	9
24	28	33	39	42	60	44	32.5	11.5	20	5	2	16	3	9
25	30	34	40	44	60	45	33.5	11.5	20	5	2	15	3	9
28	33	37	43	47	65	47	35.5	11.5	20	5	2	18	3	9
30	35	39	45	49	65	47	35.5	11.5	20	5	2	18	3	9
32	38	42	48	54	65	51	39.5	11.5	20	5	2	14	3	9
33	38	42	48	54	65	51	39.5	11.5	20	5	2	14	3	9
35	40	44	50	56	65	55	43.5	11.5	20	5	2	10	3	9
38	43	49	56	59	75	60	46	14	23	6	2	15	4	9
40	45	51	58	61	75	62	48	14	23	6	2	13	4	9
43	48	54	61	64	75	65	51	14	23	6	2	10	4	9
45	50	56	63	66	75	69	55	14	23	6	2	6	4	9
48	53	59	66	69	85	69	55	14	23	6	2	16	4	9
50	55	62	70	71	85	73	58	15	25	6	2.5	12	4	9
53	58	65	73	78	85	75	60	15	25	6	2.5	10	4	9
55	60	67	75	79	85	75	60	15	25	6	2.5	10	4	9
58	63	70	78	83	85	75	60	15	25	6	2.5	10	4	9
60	65	72	80	85	95	75	60	15	25	6	2.5	20	4	9
63	68	75	83	88	95	75	60	15	25	6	2.5	20	4	9
65	70	77	85	90	95	76	61	15	25	6	2.5	19	4	9
70	75	83	92	98	95	81	63	18	28	7	2.5	14	4	9
75	80	88	97	103	105	86	68	18	28	7	2.5	19	4	9
80	85	95	105	109	105	86	68	18.2	28	7	3	19	4	9

Spacer ring is not included in the delivery of the mechanical seal.

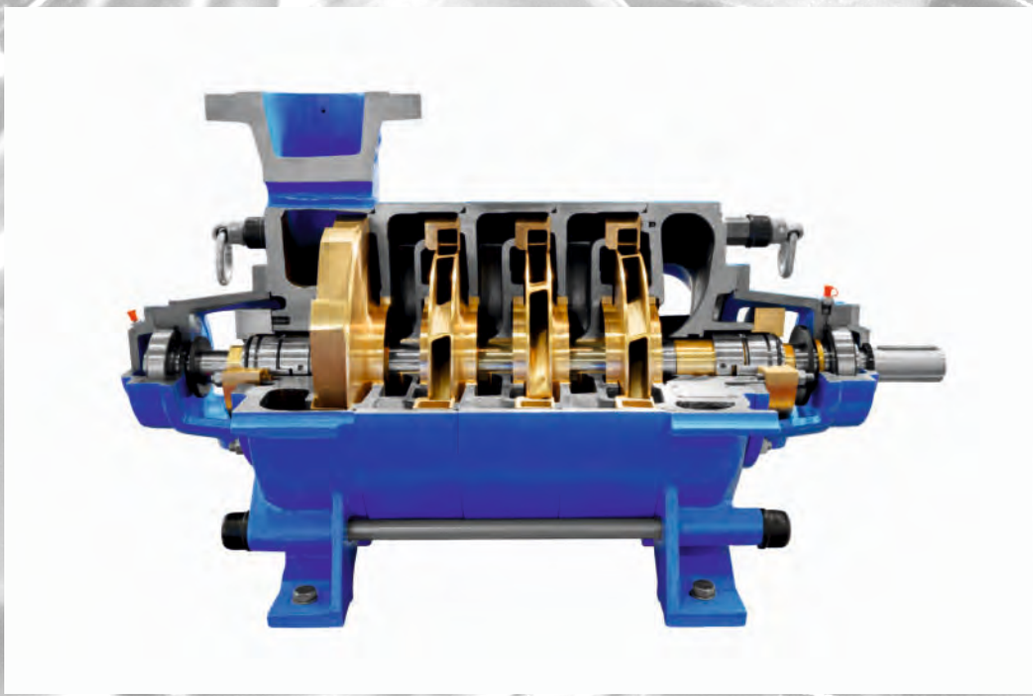

83EK-83EKG

Universal norm seal for high pressure applications
Stepped shaft/shaft sleeve
Massive replaceable seal rings
Super-sinus-spring
Multiple springs

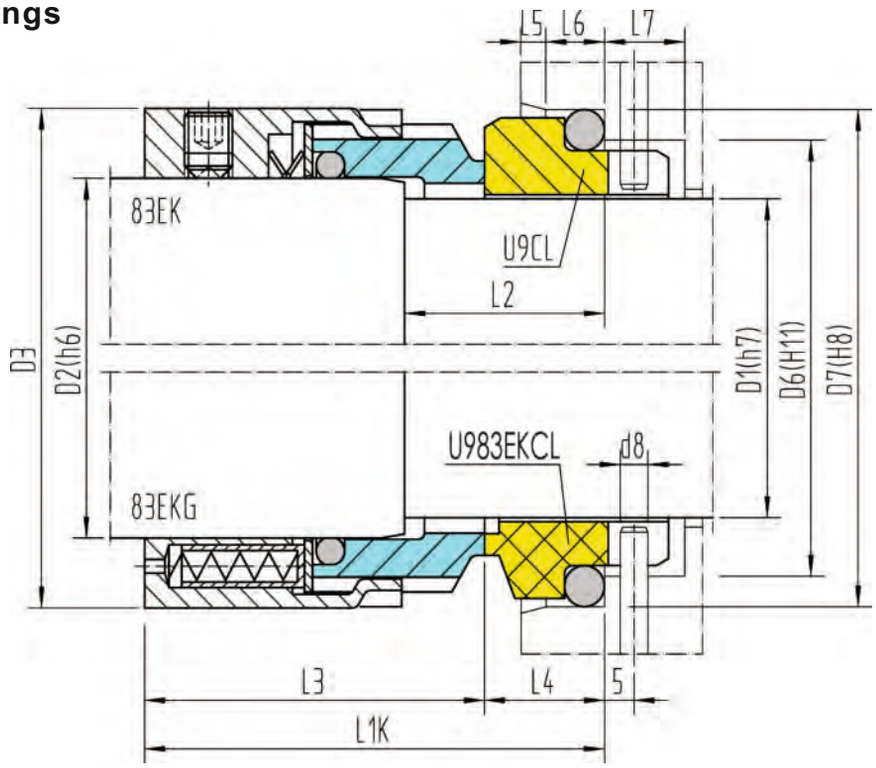

Materials:
Rotary: Q, U
Stationary: A, B, Q, U
Rubber parts: P, E, V, K, M

Operating limits:
(look at working conditions page 112)

p≤	40 bar
t=	-35 ÷ 220°C
v≤	20 m/s

EN 12756 (DIN 24960)										U983EKCL	U9CL	
D1	**D2**	**D6**	**D7**	**D3**	**L1K**	**L3**	**L4**	**L2**	**L6**	**L5**	**D8**	**L7**
14	18	21	25	33	42.5	32.5	10	18	4	1.5	3	8.5
16	20	23	27	35	42.5	32.5	10	18	4	1.5	3	8.5
18	22	27	33	37	45	33.5	11.5	20	5	2	3	9
20	24	29	35	39	45	33.5	11.5	20	5	2	3	9
22	26	31	37	41	45	33.5	11.5	20	5	2	3	9
24	28	33	39	43	47.5	36	11.5	20	5	2	3	9
25	30	34	40	45	47.5	36	11.5	20	5	2	3	9
28	33	37	43	48	50	38.5	11.5	20	5	2	3	9
30	35	39	45	50	50	38.5	11.5	20	5	2	3	9
32	38	42	48	55	50	38.5	11.5	20	5	2	3	9
33	38	42	48	55	50	38.5	11.5	20	5	2	3	9
35	40	44	50	57	50	38.5	11.5	20	5	2	3	9
38	43	49	56	60	52.5	38.5	14	23	6	2	4	9
40	45	51	58	62	52.5	38.5	14	23	6	2	4	9
43	48	54	61	65	52.5	38.5	14	23	6	2	4	9
45	50	56	63	67	52.5	38.5	14	23	6	2	4	9
48	53	59	66	70	52.5	38.5	14	23	6	2	4	9
50	55	62	70	72	57.5	42.5	15	25	6	2.5	4	9
53	58	65	73	79	57.5	42.5	15	25	6	2.5	4	9
55	60	67	75	81	57.5	42.5	15	25	6	2.5	4	9
58	63	70	78	84	62.5	47.5	15	25	6	2.5	4	9
60	65	72	80	86	62.5	47.5	15	25	6	2.5	4	9
63	68	75	83	89	62.5	47.5	15	25	6	2.5	4	9
65	70	77	85	91	62.5	47.5	15	25	6	2.5	4	9
70	75	83	92	99	70	52	18	28	7	2.5	4	9
75	80	88	97	104	70	52	18	28	7	2.5	4	9
80	85	95	105	109	70	51.8	18.2	28	7	3	4	9
85	90	100	110	114	75	56.8	18.2	28	7	3	4	9
90	95	105	115	119	75	56.8	18.2	28	7	3	4	9
95	100	110	120	124	75	57.8	17.2	28	7	3	4	9
100	105	115	125	129	75	57.8	17.2	28	7	3	4	9

Universal norm seal for high pressure applications with pumping screw
Stepped shaft/shaft sleeve
Massive replaceable seal rings
Super-sinus-spring
Multiple springs

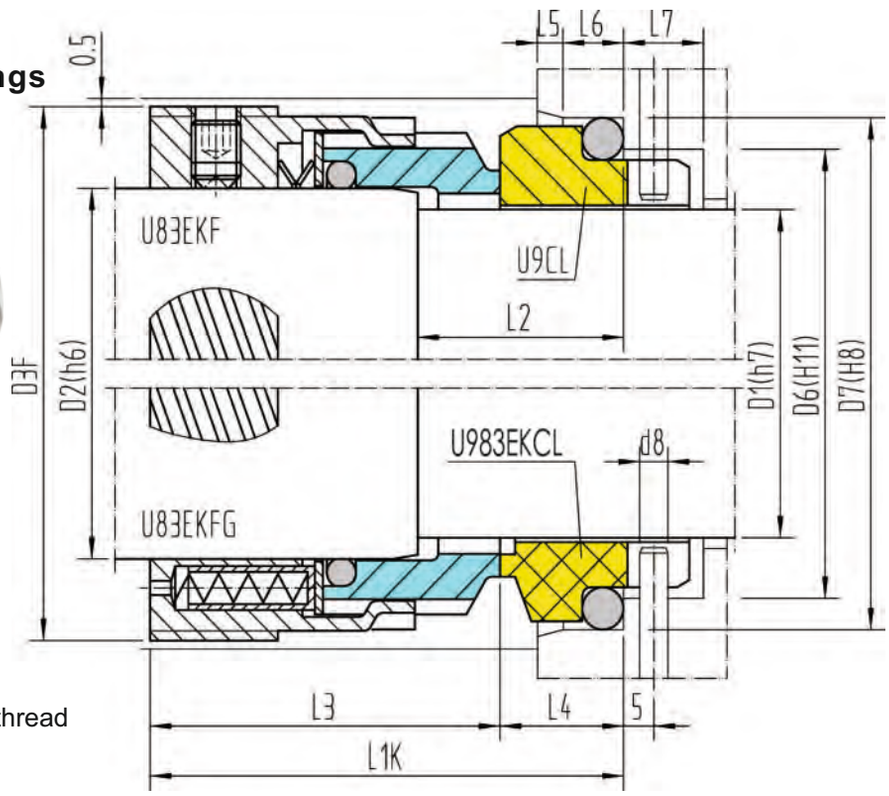

Note the direction of rotation of the thread
page 121

Materials:
Rotary: Q, U
Stationary: A, B, Q, U
Rubber parts: P, E, V, K, M

Operating limits:
(look at working conditions page 112)

p≤	40 bar
t=	-35 ÷ 220°C
v≤	20 m/s

EN 12756 (DIN 24960) **U983EKCL U9CL**

D1	D2	D6	D7	D3F	L1K	L3	L4	L2	L6	L5	D8	L7
14	18	21	25	37	42.5	32.5	10	18	4	1.5	3	8.5
16	20	23	27	30	42.5	32.5	10	18	4	1.5	3	8.5
18	22	27	33	41	45	33.5	11.5	20	5	2	3	9
20	24	29	35	43	45	33.5	11.5	20	5	2	3	9
22	26	31	37	44	45	33.5	11.5	20	5	2	3	9
24	28	33	39	46	47.5	36	11.5	20	5	2	3	9
25	30	34	40	48	47.5	36	11.5	20	5	2	3	9
28	33	37	43	50	50	38.5	11.5	20	5	2	3	9
30	35	39	45	53	50	38.5	11.5	20	5	2	3	9
32	38	42	48	58	50	38.5	11.5	20	5	2	3	9
33	38	42	48	58	50	38.5	11.5	20	5	2	3	9
35	40	44	50	60	50	38.5	11.5	20	5	2	3	9
38	43	49	56	64	52.5	38.5	14	23	6	2	4	9
40	45	51	58	65	52.5	38.5	14	23	6	2	4	9
43	48	54	61	68	52.5	38.5	14	23	6	2	4	9
45	50	56	63	70	52.5	38.5	14	23	6	2	4	9
48	53	59	66	74	52.5	38.5	14	23	6	2	4	9
50	55	62	70	75	57.5	42.5	15	25	6	2.5	4	9
53	58	65	73	82	57.5	42.5	15	25	6	2.5	4	9
55	60	67	75	84	57.5	42.5	15	25	6	2.5	4	9
58	63	70	78	87	62.5	47.5	15	25	6	2.5	4	9
60	65	72	80	94	62.5	47.5	15	25	6	2.5	4	9
63	68	75	83	92	62.5	47.5	15	25	6	2.5	4	9
65	70	77	85	94	62.5	47.5	15	25	6	2.5	4	9
70	75	83	92	104	70	52	18	28	7	2.5	4	9
75	80	88	97	108	70	52	18	28	7	2.5	4	9
80	85	95	105	113	70	51.8	18.2	28	7	3	4	9
85	90	100	110	118	75	56.8	18.2	28	7	3	4	9
90	95	105	115	123	75	56.8	18.2	28	7	3	4	9
95	100	110	120	128	75	57.8	17.2	28	7	3	4	9
100	105	115	125	133	75	57.8	17.2	28	7	3	4	9

Shorter norm seal for high pressure applications
Stepped shaft/shaft sleeve
Massive replaceable seal rings
Super-sinus-spring

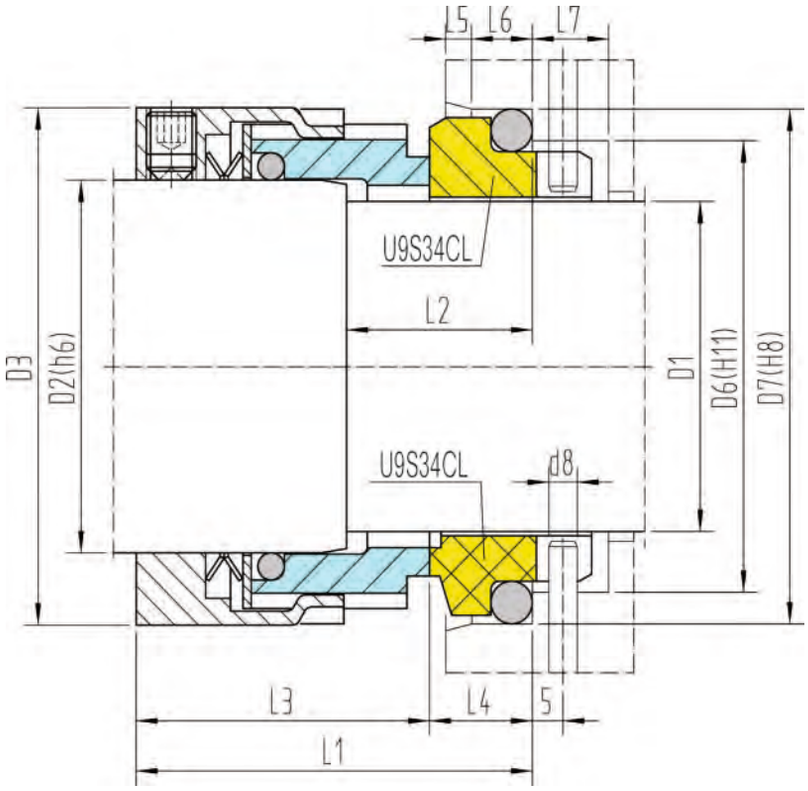

Materials:
Rotary: Q, U
Stationary: A, B, Q, U
Rubber parts: P, E, V, K, M

Operating limits:
(look at working conditions page 112)

p⩽	40 bar
t=	-35 ÷ 220°C
v⩽	20 m/s

EN 12756 (DIN 24960) **U9S34CL**

D1	D2	D6	D7	D3	L1	L3	L4	L2	L6	L5	D8	L7
14	18	21	25	33	37	28.5	8.5	18	4	1.5	3	8.5
16	20	23	27	35	37	28.5	8.5	18	4	1.5	3	8.5
18	22	27	33	37	38.5	28.5	10	20	5	2	3	9
20	24	29	35	39	41.5	31.5	10	20	5	2	3	9
22	26	31	37	41	42.5	32.5	10	20	5	2	3	9
24	28	33	39	43	42.5	32.5	10	20	5	2	3	9
25	30	34	40	45	43.5	33.5	10	20	5	2	3	9
28	33	37	43	48	43.5	33.5	10	20	5	2	3	9
30	35	39	45	50	43.5	33.5	10	20	5	2	3	9
33	38	42	48	55	44.5	34.5	10	20	5	2	3	9
35	40	44	50	57	45.5	35.5	10	20	5	2	3	9
38	43	49	56	60	49	38	11	23	6	2	4	9
40	45	51	58	62	49	38	11	23	6	2	4	9
43	48	54	61	65	49	38	11	23	6	2	4	9
45	50	56	63	67	49	38	11	23	6	2	4	9
48	53	59	66	70	49	38	11	23	6	2	4	9
50	55	62	70	72	51	38	13	25	6	2.5	4	9
53	58	65	73	79	52	39	13	25	6	2.5	4	9
55	60	67	75	81	52	39	13	25	6	2.5	4	9
58	63	70	78	84	55	42	13	25	6	2.5	4	9
60	65	72	80	86	55	44	11	25	6	2.5	4	9
63	68	75	83	89	55	42	13	25	6	2.5	4	9
65	70	77	85	91	55	42	13	25	6	2.5	4	9
70	75	83	92	99	58	44.5	13.5	28	7	2.5	4	9
75	80	88	97	104	59	44	15	28	7	2.5	4	9
80	85	95	105	109	59	44	15	28	7	3	4	9
85	90	100	110	114	66	50.5	15.5	28	7	3	4	9
90	95	105	115	119	66	50.5	15.5	28	7	3	4	9
95	100	110	120	124	66	50.5	15.5	28	7	3	4	9
100	105	115	125	129	66	50.5	15.5	28	7	3	4	9

Robust norm seal for high pressure applications
Stepped shaft/shaft sleeve
Massive replaceable seal rings
Super-sinus-spring

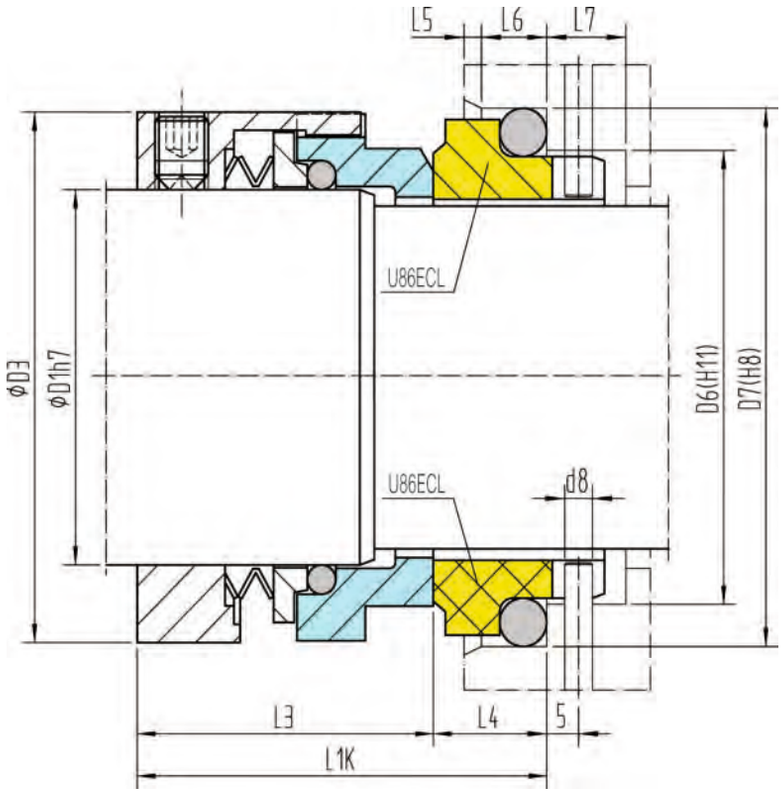

Materials:
Rotary: Q, U
Stationary: A, B, Q, U
Rubber parts: P, E, V, K, M

Operating limits:
(look at working conditions page 112)

p≤	40 bar
t=	-35 ÷ 220°C
v≤	20 m/s

EN 12756 (DIN 24960) **U86ECL**

D1	D2	D6	D7	D3	L1K	L3	L4	L2	L6	L5	D8	L7
14	18	21	25	31	42.5	32.5	10	18	4	1.5	3	8.5
16	20	23	27	33	42.5	32.5	10	18	4	1.5	3	8.5
18	22	27	33	37	45	33.5	11.5	20	5	2	3	9
20	24	29	35	39	45	33.5	11.5	20	5	2	3	9
22	26	31	37	41	45	33.5	11.5	20	5	2	3	9
24	28	33	39	43	47.5	36	11.5	20	5	2	3	9
25	30	34	40	45	47.5	36	11.5	20	5	2	3	9
28	33	37	43	48	50	38.5	11.5	20	5	2	3	9
30	35	39	45	50	50	38.5	11.5	20	5	2	3	9
32	38	42	48	55	50	38.5	11.5	20	5	2	3	9
33	38	42	48	55	50	38.5	11.5	20	5	2	3	9
35	40	44	50	57	50	38.5	11.5	20	5	2	3	9
38	43	49	56	60	52.5	39.5	13	23	6	2	4	9
40	45	51	58	62	52.5	39.5	13	23	6	2	4	9
43	48	54	61	66	52.5	39.5	13	23	6	2	4	9
45	50	56	63	68	52.5	39.5	13	23	6	2	4	9
48	53	59	66	71	52.5	39.5	13	23	6	2	4	9
50	55	62	70	74	57.5	43.5	14	25	6	2.5	4	9
53	58	65	73	79	57.5	43.5	14	25	6	2.5	4	9
55	60	67	75	82	57.5	43.5	14	25	6	2.5	4	9
58	63	70	78	85	62.5	48.5	14	25	6	2.5	4	9
60	65	72	80	87	62.5	48.5	14	25	6	2.5	4	9
63	68	75	83	90	62.5	48.5	14	25	6	2.5	4	9
65	70	77	85	92	62.5	48.5	14	25	6	2.5	4	9
70	75	83	92	100	70	54	16	28	7	2.5	4	9
75	80	88	97	105	70	54	16	28	7	2.5	4	9
80	85	95	105	110	70	54	16	28	7	3	4	9
85	90	100	110	116	75	59	16	28	7	3	4	9
90	95	105	115	121	75	59	16	28	7	3	4	9
95	100	110	120	126	75	59	16	28	7	3	4	9
100	105	115	125	131	75	59	16	28	7	3	4	9

Universal norm seal for high pressure applications
Stepped shaft/shaft sleeve
Massive replaceable seal rings
Multiple springs
Vibration practica

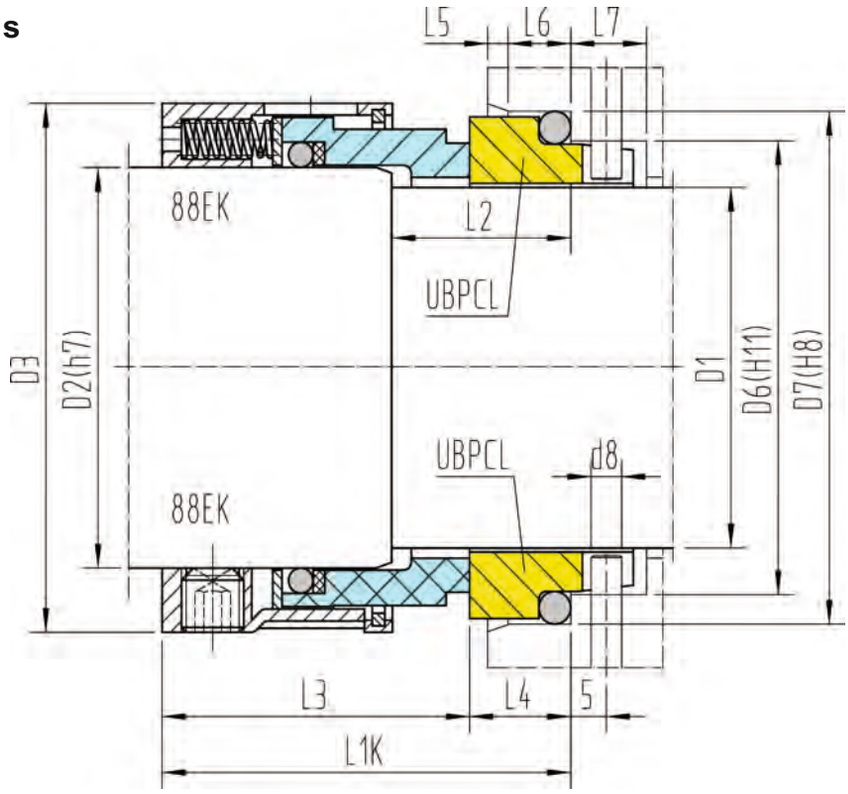

Materials:
Rotary: A, B, Q, U
Stationary: Q, U, V
Rubber parts: P, E, V, K, M

Operating limits:
(look at working conditions page 112)

p≤	40 bar
t=	-35 ÷ 220°C
v≤	20 m/s

EN 12756 (DIN 24960) **UBPCL**

D1	D2	D6	D7	D3	L1K	L3	L4	L2	L6	L5	D8	L7
14	18	21	25	32	42.5	30.5	12	18	4	1.5	3	8.5
16	20	23	27	34	42.5	30.5	12	18	4	1.5	3	8.5
18	22	27	33	36	45	31.5	13.5	20	5	2	3	9
20	24	29	35	38	45	31.5	13.5	20	5	2	3	9
22	26	31	37	40	45	31.5	13.5	20	5	2	3	9
24	28	33	39	42	47.5	34	13.5	20	5	2	3	9
25	30	34	40	44	47.5	34.5	13	20	5	2	3	9
28	33	37	43	47	50	37.5	12.5	20	5	2	3	9
30	35	39	45	49	50	38	12	20	5	2	3	9
32	38	42	48	54	50	38	12	20	5	2	3	9
33	38	42	48	54	50	38	12	20	5	2	3	9
35	40	44	50	56	50	38	12	20	5	2	3	9
38	43	49	56	59	52.5	39.5	13	23	6	2	4	9
40	45	51	58	61	52.5	39.5	13	23	6	2	4	9
43	48	54	61	64	52.5	39.5	13	23	6	2	4	9
45	50	56	63	66	52.5	39.5	13	23	6	2	4	9
48	53	59	66	69	52.5	39.5	13	23	6	2	4	9
50	55	62	70	71	57.5	44	13.5	25	6	2.5	4	9
53	58	65	73	78	57.5	44	13.5	25	6	2.5	4	9
55	60	67	75	80	57.5	44	13.5	25	6	2.5	4	9
58	63	70	78	83	62.5	49	13.5	25	6	2.5	4	9
60	65	72	80	85	62.5	49	13.5	25	6	2.5	4	9
63	68	75	83	88	62.5	49	13.5	25	6	2.5	4	9
65	70	77	85	90	62.5	49	13.5	25	6	2.5	4	9
70	75	83	92	95	70	55.5	14.5	28	7	2.5	4	9
75	80	88	97	104	70	55.5	14.5	28	7	2.5	4	9
80	85	95	105	109	70	55	15	28	7	3	4	9
85	90	100	110	114	75	60	15	28	7	3	4	9
90	95	105	115	119	75	60	15	28	7	3	4	9
95	100	110	120	124	75	60	15	28	7	3	4	9
100	105	115	125	129	75	60	15	28	7	3	4	9

Special high-pressure seal for plain shafts
Massive replaceable seal rings
Sinus-spring
Cylindrical single spring or multiple springs

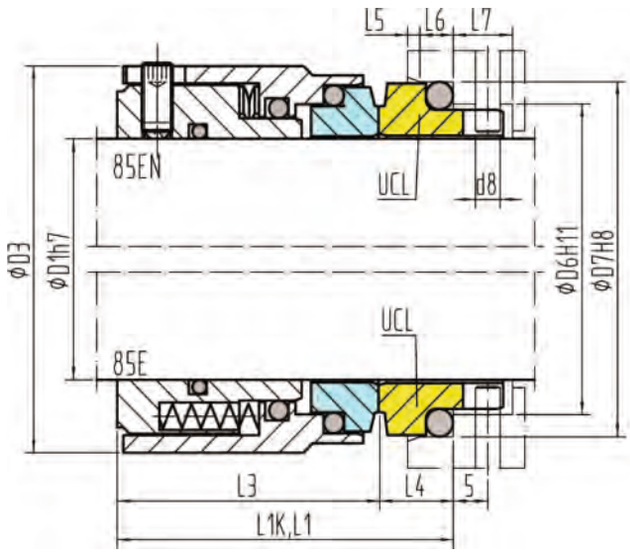

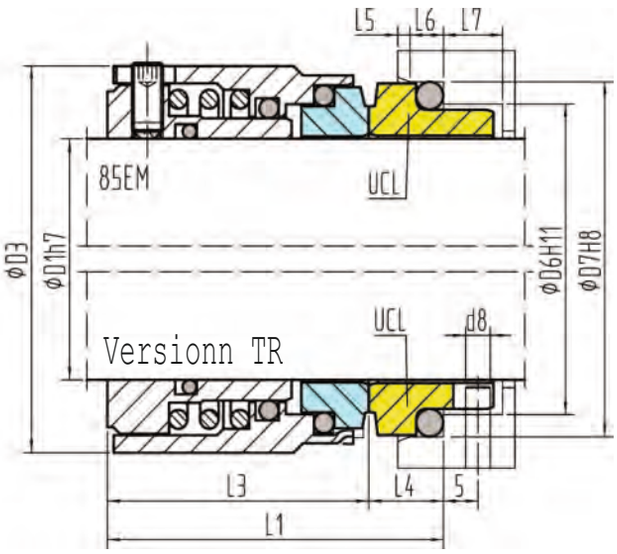

Materials:
Rotary: A, B, Q, U
Stationary: A, B, Q, U
Rubber parts: P, E, V, K, M

Operating limits:
(look at working conditions page 112)

p⩽	30 bar
t=	-35 ÷ 200°C
v⩽	15m/s

EN 12756 (DIN 24960)										UCL	85EM UCL	
D1	D6	D7	D3	L1K	L3	L4	L6	L5	D8	L7	L1	L3
20	29	35	40	37.5	27.5	10	5	2	3	9	45	35
22	31	37	43	37.5	27.5	10	5	2	3	9	45	35
24	33	39	44	40	30	10	5	2	3	9	47.5	37.5
25	34	40	47	40	30	10	5	2	3	9	47.5	37.5
28	37	43	49	42.5	32.5	10	5	2	3	9	50	40
30	39	45	54	42.5	32.5	10	5	2	3	9	50	40
32	42	48	55	42.5	32.5	10	5	2	3	9	50	40
33	42	48	55	42.5	32.5	10	5	2	3	9	50	40
35	44	50	57	42.5	32.5	10	5	2	3	9	50	40
38	49	56	60	45	32	13	6	2	4	9	52.5	39.5
40	51	58	63	45	32	13	6	2	4	9	52.5	39.5
43	54	61	70	45	32	13	6	2	4	9	52.5	39.5
45	56	63	73	45	32	13	6	2	4	9	52.5	39.5
48	59	66	77	45	32	13	6	2	4	9	52.5	39.5
50	62	70	80	47.5	33.5	14	6	2.5	4	9	57.5	43.5
53	65	73	83	47.5	33.5	14	6	2.5	4	9	57.5	43.5
55	67	75	85	47.5	33.5	14	6	2.5	4	9	57.5	43.5
58	70	78	88	52.5	38.5	14	6	2.5	4	9	62.5	48.5
60	72	80	90	52.5	38.5	14	6	2.5	4	9	62.5	48.5
63	75	83	93	52.5	38.5	14	6	2.5	4	9	62.5	48.5
65	77	85	95	52.5	38.5	14	6	2.5	4	9	62.5	48.5
70	83	92	105	60	44	16	7	2.5	4	9	70	54
75	88	97	110	60	44	16	7	2.5	4	9	70	54
80	95	105	115	60	42	18	7	3	4	9	70	52
85	100	110	120	60	42	18	7	3	4	9	75	57
90	105	115	125	65	47	18	7	3	4	9	75	57
95	110	120	132	65	47	18	7	3	4	9	75	57
100	115	125	140	65	47	18	7	3	4	9	75	57

EHSJHK-EHSJHKG

Universal high-pressure seal for plain shafts
Super-sinus spring, product protected or multiple springs
Shrinked seal rings
Food industry

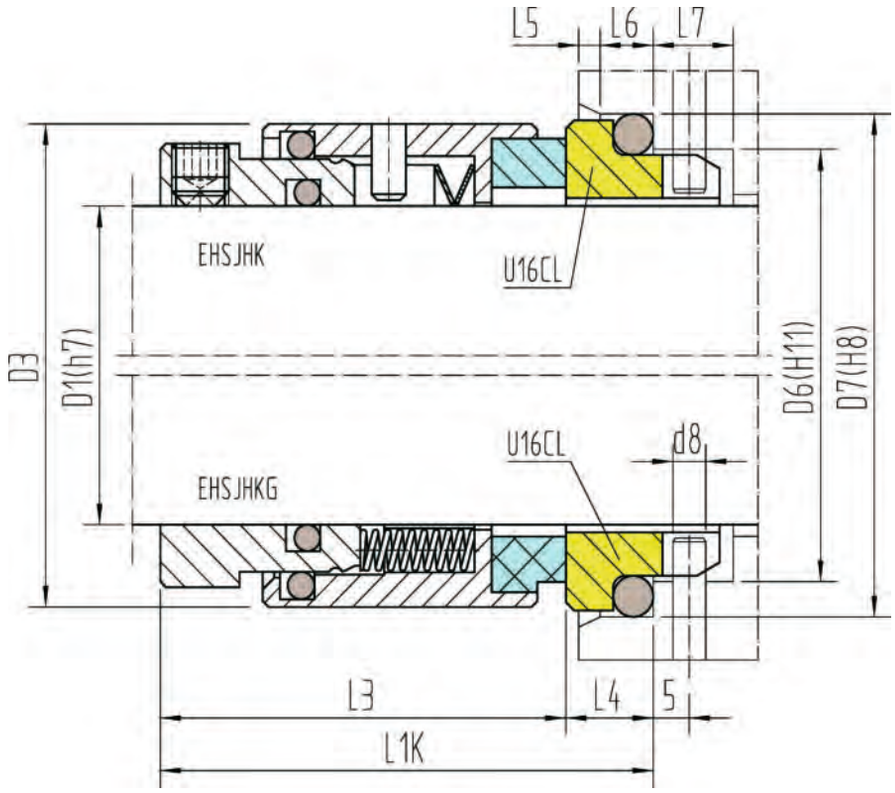

Operating limits:
(look at working conditions page 112)

p≤	25 bar
t=	-35 ÷ 140°C
v≤	15 m/s

Materials:
Rotary: A, B, Q, U
Stationary: Q, U
Rubber parts: P, E, V, K, M

EN 12756 (DIN 24960)										U16CL
D1	**D6**	**D7**	**D3**	**L1K**	**L3**	**L4**	**L6**	**L5**	**D8**	**L7**
14	21	25	25	35	29.5	5.5	4	1.5	3	8.5
16	23	27	26	35	29.5	5.5	4	1.5	3	8.5
18	27	33	32	37.5	30.5	7	5	2	3	9
20	29	35	34	37.5	30.5	7	5	2	3	9
22	31	37	36	37.5	30.5	7	5	2	3	9
24	33	39	38	40	33	7	5	2	3	9
25	34	40	39	40	33	7	5	2	3	9
28	37	43	42	42.5	35.5	7	5	2	3	9
30	39	45	44	42.5	35.5	7	5	2	3	9
32	42	48	47	42.5	35.5	7	5	2	3	9
33	42	48	47	42.5	35.5	7	5	2	3	9
35	44	50	49	42.5	35.5	7	5	2	3	9
38	49	56	54	45	37	8	6	2	4	9
40	51	58	56	45	37	8	6	2	4	9
43	54	61	59	45	37	8	6	2	4	9
45	56	63	61	45	37	8	6	2	4	9
48	59	66	64	45	37	8	6	2	4	9
50	62	70	66	47.5	38	9.5	6	2.5	4	9
53	65	73	69	47.5	38	9.5	6	2.5	4	9
55	67	75	71	47.5	38	9.5	6	2.5	4	9
58	70	78	78	52.5	42	10.5	6	2.5	4	9
60	72	80	80	52.5	42	10.5	6	2.5	4	9
63	75	83	83	52.5	42	10.5	6	2.5	4	9
65	77	85	85	52.5	42	10.5	6	2.5	4	9
68	81	90	88	52.5	41.5	11.5	7	2.5	4	9
70	83	92	90	60	48.5	11.5	7	2.5	4	9
75	88	97	99	60	48.5	11.5	7	2.5	4	9
80	95	105	104	60	48.5	11.5	7	3	4	9
85	100	110	109	60	48.5	11.5	7	3	4	9
90	105	115	114	65	52	13	7	3	4	9
95	110	120	119	65	52	13	7	3	4	9
100	115	125	124	65	52	13	7	3	4	9

Universal high-pressure seal for plain shafts
Super-sinus spring, product protected or multiple springs
Shrinked seal rings
For particularly sticky, fibrous and solid-containing media
Sewage, paint and pulp industries

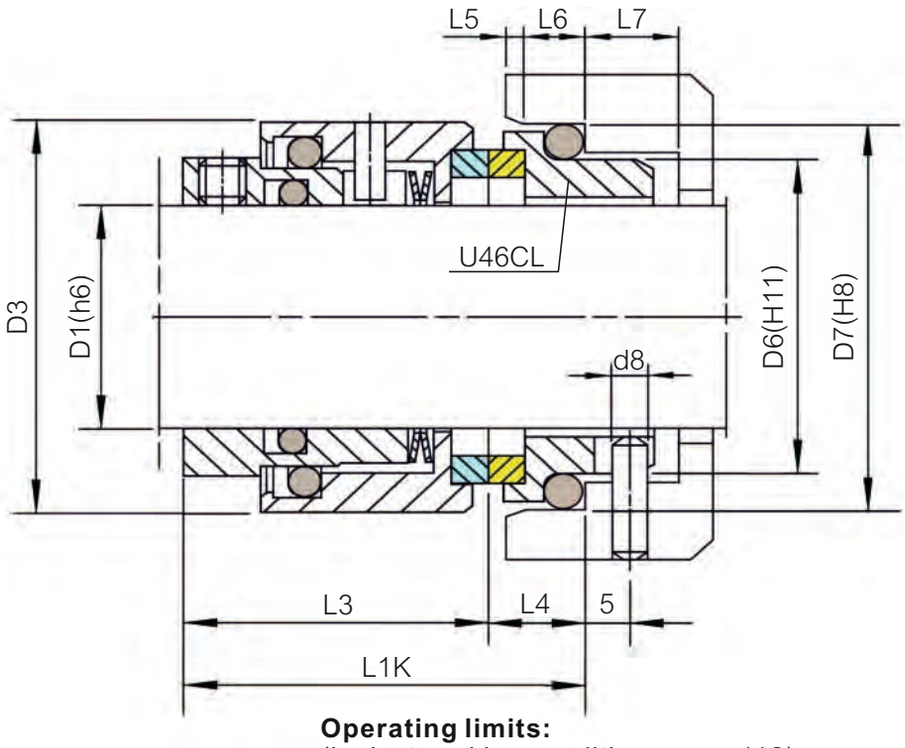

Materials:
Rotary: Q, U
Stationary: Q, U
Rubber parts: P, E, V, K, M

Operating limits:
(look at working conditions page 112)

p≤	25 bar
t=	-35 ÷ 140°C
v≤	15 m/s

EN 12756 (DIN 24960) **U46CL**

D1	D6	D7	D3	L1K	L3	L4	L6	L5	D8	L7
18	27	33	32	37.5	28.5	9	5	2	3	9
20	29	35	34	37.5	28.5	9	5	2	3	9
22	31	37	36	37.5	28.5	9	5	2	3	9
24	33	39	38	40	31	9	5	2	3	9
25	34	40	39	40	31	9	5	2	3	9
28	37	43	42	42.5	33	9.5	5	2	3	9
30	39	45	44	42.5	33	9.5	5	2	3	9
32	42	48	47	42.5	33	9.5	5	2	3	9
33	42	48	47	42.5	33	9.5	5	2	3	9
35	44	50	49	42.5	33	9.5	5	2	3	9
38	49	56	54	45	34.5	10.5	6	2	4	9
40	51	58	56	45	34.5	10.5	6	2	4	9
43	54	61	59	45	34.5	10.5	6	2	4	9
45	56	63	61	45	34.5	10.5	6	2	4	9
48	59	66	64	45	34.5	10.5	6	2	4	9
50	62	70	66	47.5	35.5	12	6	2.5	4	9
53	65	73	69	47.5	35.5	12	6	2.5	4	9
55	67	75	71	47.5	35.5	12	6	2.5	4	9
58	70	78	78	52.5	39.5	13	6	2.5	4	9
60	72	80	80	52.5	39.5	13	6	2.5	4	9
63	45	83	83	52.5	39.5	13	6	2.5	4	9
65	77	85	85	52.5	39.5	13	6	2.5	4	9
68	81	90	88	52.5	39	13.5	7	2.5	4	9
70	83	92	90	60	46	14	7	2.5	4	9
75	88	97	99	60	46	14	7	2.5	4	9
80	95	105	104	60	46	14	7	3	4	9
85	100	110	109	60	46	14	7	3	4	9
90	105	115	114	65	49.5	15.5	7	3	4	9
95	110	120	119	65	49.5	15.5	7	3	4	9
100	115	125	124	65	49.5	15.5	7	3	4	9

Universal high-pressure seal for plain shafts
Super-sinus spring, product protected
Shrinked or brazed seal rings
Food industry

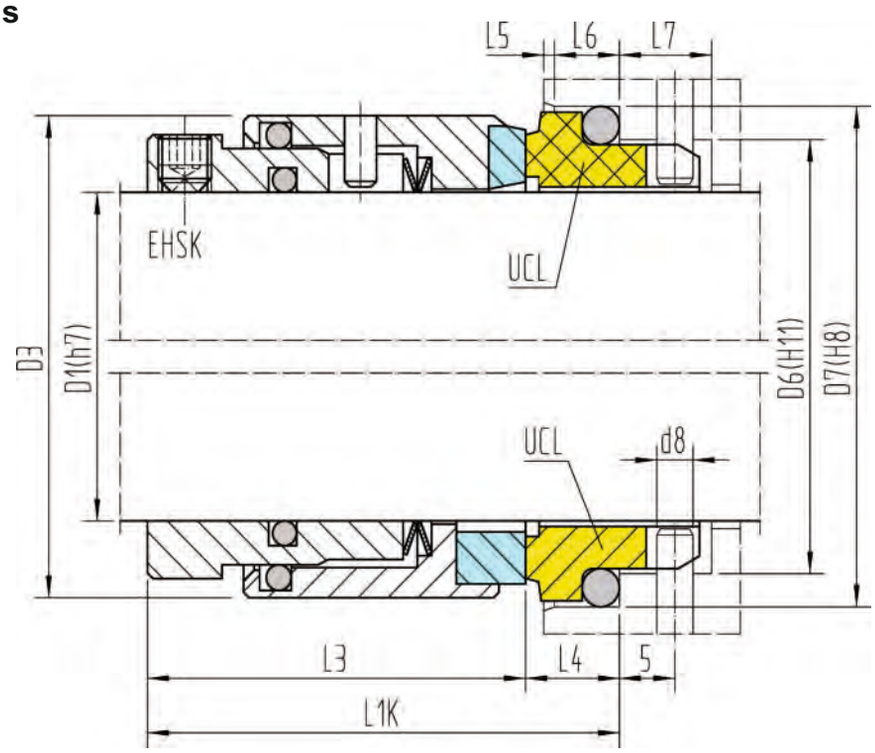

Materials:
Rotary: Q, U
Stationary: A, B, Q, U
Rubber parts: P, E, V, K, M

Operating limits:
(look at working conditions page 112)

EHSK	
p≤	25 bar
t=	-35 ÷ 140°C (220°C)
v≤	15 m/s

EN 12756 (DIN 24960)										UCL
D1	**D6**	**D7**	**D3**	**L1K**	**L3**	**L4**	**L6**	**L5**	**D8**	**L7**
14	21	25	26	35	28	7	4	1.5	3	8.5
16	23	27	31	35	28	7	4	1.5	3	8.5
18	27	33	36	37.5	27.5	10	5	2	3	9
20	29	35	38	37.5	27.5	10	5	2	3	9
22	31	37	39	37.5	27.5	10	5	2	3	9
24	33	39	40	40	30	10	5	2	3	9
25	34	40	40	40	30	10	5	2	3	9
28	37	43	44	42.5	32.5	10	5	2	3	9
30	39	45	44	42.5	32.5	10	5	2	3	9
32	42	48	47	42.5	32.5	10	5	2	3	9
33	42	48	48	42.5	32.5	10	5	2	3	9
35	44	50	50	42.5	32.5	10	5	2	3	9
38	49	56	55	45	32	13	6	2	4	9
40	51	58	58	45	32	13	6	2	4	9
43	54	61	62	45	32	13	6	2	4	9
45	56	63	64	45	32	13	6	2	4	9
48	59	66	67	45	32	13	6	2	4	9
50	62	70	70	47.5	33.5	14	6	2.5	4	9
53	65	73	74	47.5	33.5	14	6	2.5	4	9
55	67	75	78	47.5	33.5	14	6	2.5	4	9
58	70	78	80	52.5	38.5	14	6	2.5	4	9
60	72	80	82	52.5	38.5	14	6	2.5	4	9
63	75	83	87	52.5	38.5	14	6	2.5	4	9
65	77	85	89	52.5	38.5	14	6	2.5	4	9
68	81	90	92	52.5	36.5	16	7	2.5	4	9
70	83	92	94	60	44	16	7	2.5	4	9
75	88	97	103	60	44	16	7	2.5	4	9
80	95	105	108	60	42	18	7	3	4	9
85	100	110	113	60	42	18	7	3	4	9
90	105	115	118	65	47	18	7	3	4	9
95	110	120	123	65	47	18	7	3	4	9
100	115	125	128	65	47	18	7	3	4	9

Universal high-pressure seal for plain shafts
Super-sinus spring and set screws, product protected
Shrinked seal rings
Sterile applications
Food- and pharmaceutical industry

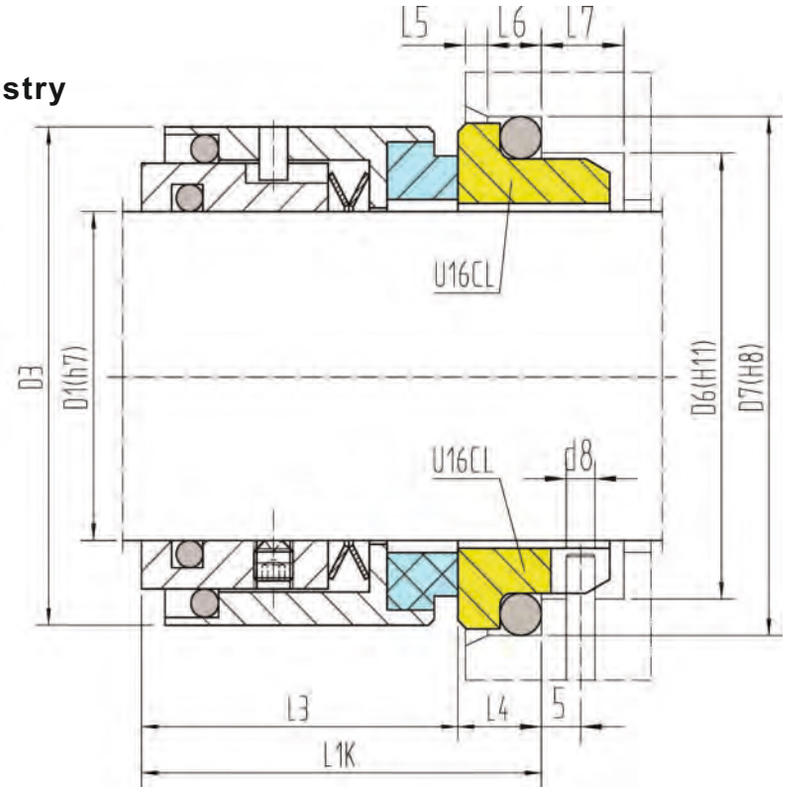

Customized special solutions possible!

Materials:
Rotary: B, Q, U
Stationary: Q, U
Rubber parts: P, E, V, K, M

Operating limits:
(look at working conditions page 112)

p≤	25 bar
t=	-35 ÷ 140°C
v≤	15 m/s

EN 12756 (DIN 24960) **U16CL**

D1	D6	D7	D3	L1K	L3	L4	L6	L5	D8	L7
14	21	25	25	35	29.5	5.5	4	1.5	3	8.5
16	23	27	30	35	29.5	5.5	4	1.5	3	8.5
18	27	33	32	37.5	30.5	7	5	2	3	9
20	29	35	34	37.5	30.5	7	5	2	3	9
22	31	37	36	37.5	30.5	7	5	2	3	9
24	33	39	38	40	33	7	5	2	3	9
25	34	40	39	40	33	7	5	2	3	9
28	37	43	42	42.5	35.5	7	5	2	3	9
30	39	45	44	42.5	35.5	7	5	2	3	9
32	42	48	47	42.5	35.5	7	5	2	3	9
33	42	48	47	42.5	35.5	7	5	2	3	9
35	44	50	49	42.5	35.5	7	5	2	3	9
38	49	56	54	45	37	8	6	2	4	9
40	51	58	56	45	37	8	6	2	4	9
43	54	61	59	45	37	8	6	2	4	9
45	56	63	61	45	37	8	6	2	4	9
48	59	66	64	45	37	8	6	2	4	9
50	62	70	66	47.5	38	9.5	6	2.5	4	9
53	65	73	69	47.5	38	9.5	6	2.5	4	9
55	67	75	71	47.5	38	9.5	6	2.5	4	9
58	70	78	78	52.5	42	10.5	6	2.5	4	9
60	72	80	80	52.5	42	10.5	6	2.5	4	9
63	75	83	83	52.5	42	10.5	6	2.5	4	9
65	77	85	85	52.5	42	10.5	6	2.5	4	9
68	81	90	-	52.5	41.5	11.5	7	2.5	4	9
70	83	92	90	60	48.5	11.5	7	2.5	4	9
75	88	97	99	60	48.5	11.5	7	2.5	4	9
80	95	105	104	60	48.5	11.5	7	3	4	9
85	100	110	109	60	48.5	11.5	7	3	4	9
90	105	115	114	65	52	13	7	3	4	9
95	110	120	119	65	52	13	7	3	4	9
100	115	125	124	65	52	13	7	3	4	9

EHSJHKZ

Universal high-pressure seal for plain shafts
Super-sinus spring product protected
Clamping sleeve, shaft protecting
Shrinked seal rings

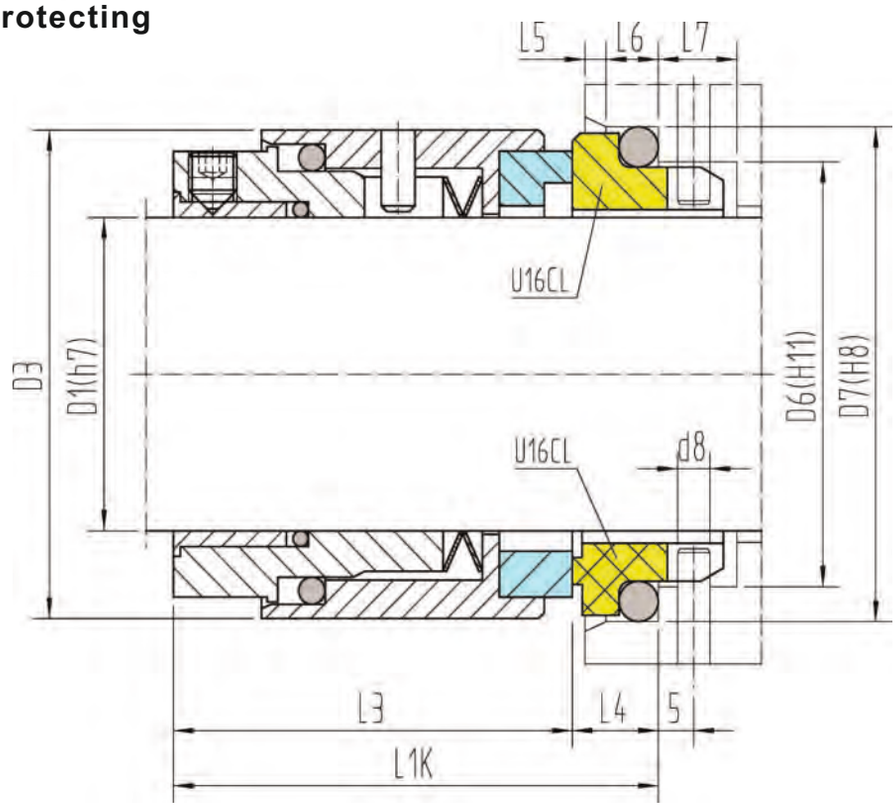

Materials:
Rotary: A, B, Q, U
Stationary: A, B, Q, U
Rubber parts: P, E, V, K, M

Operating limits:
(look at working conditions page 112)

p⩽	25 bar
t=	-35 ÷ 140°C
v⩽	15 m/s

EN 12756 (DIN 24960) **U16CL**

D1	D6	D7	D3	L1K	L3	L4	L6	L5	D8	L7
14	21	25	24	38*	32.5	5.5	4	1.5	3	8.5
16	23	27	26	40*	34.5	5.5	4	1.5	3	8.5
18	27	33	32	37.5	30.5	7	5	2	3	9
20	29	35	34	37.5	30.5	7	5	2	3	9
24	33	39	38	40	33	7	5	2	3	9
25	34	40	39	40	33	7	5	2	3	9
28	37	43	42	42.5	35.5	7	5	2	3	9
30	39	45	44	42.5	35.5	7	5	2	3	9
32	42	48	47	42.5	35.5	7	5	2	3	9
33	42	48	47	42.5	35.5	7	5	2	3	9
35	44	50	49	42.5	35.5	7	5	2	3	9
38	49	56	54	45	37	8	6	2	4	9
40	51	58	56	45	37	8	6	2	4	9
43	54	61	59	45	37	8	6	2	4	9
44	56	63	61	45	37	8	6	2	4	9
50	62	70	66	47.5	38	9.5	6	2.5	4	9
53	65	73	68.5	47.5	38	9.5	6	2.5	4	9
60	72	80	80	52.5	42	10.5	6	2.5	4	9
65	77	85	85	52.5	42	10.5	6	2.5	4	9
70	83	92	90	60	48.5	11.5	7	2.5	4	9
75	88	97	99	60	48.5	11.5	7	2.5	4	9
80	95	105	104	60	48.5	11.5	7	3	4	9
95	110	120	119	65	52	13	7	3	4	9
100	115	125	124	65	52	13	7	3	4	9

*not according to EN 12756

Solid seal
Massive replaceable sliding ring
Product-protected stationary single spring
Rotating counter ring, double elastic bearing and armored
No dynamic O-ring, gentle on the shaft

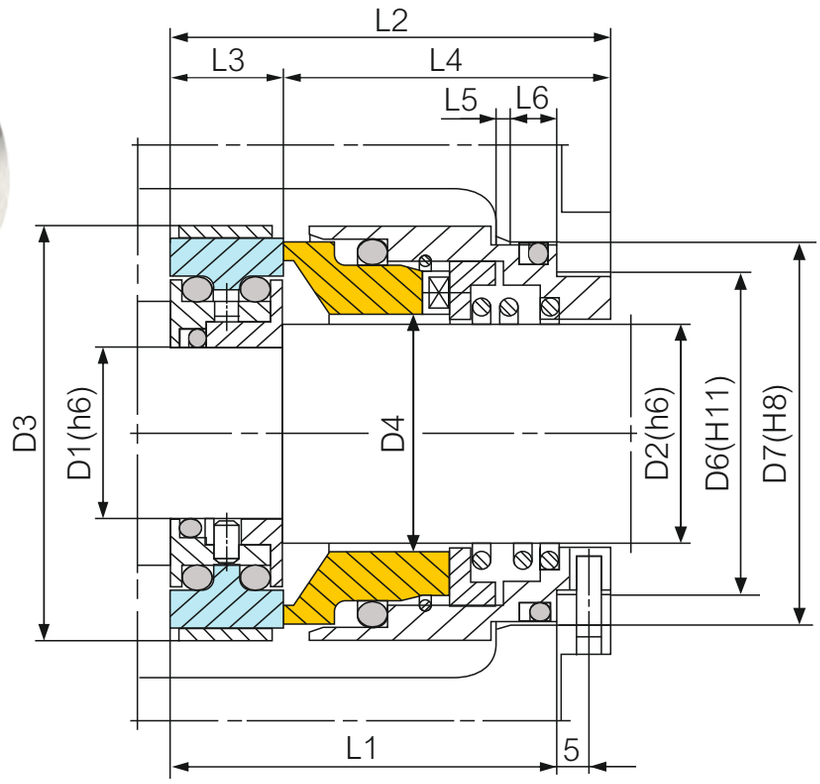

Customized special solutions possible!

Materials:
Rotary: Q, U
Stationary: Q, U
Rubber parts: P, E, V, K, M

Operating limits:
(look at working conditions page 112)

p⩽	25 bar
t=	-20 ÷ 160°C
v⩽	20 m/s

D1	D2	D6	D7	D3	D4	L1	L2	L3	L4	L5	L6
20	33	42	48	56	35	49.2	57.7	15	42.7	2	5
27	39	54	61	67	43	49.2	57.7	15	42.7	2	6
35	50	65	73	78	54	52.1	59.8	15.5	44.3	2.5	6
47	60	77	85	91	66	58	66	16.5	49.5	2.5	6
55	72	88	97	103	77	66	74.5	17.5	57	2.5	7
70	90	110	120	125	100	73	82	21	61	3	7

EHS9

Stationary norm seal
Massive replaceable seal rings
Stationary multiple springs, prodcut protected
No dynamic O-ring, shaft protecting
Counterpressure possible

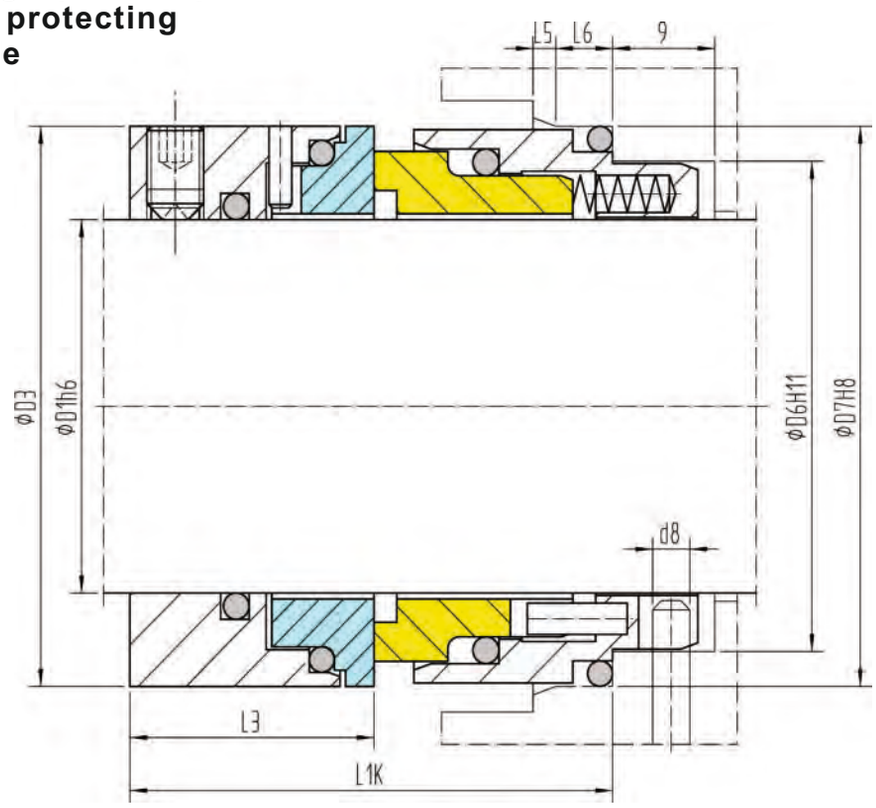

Materials:
Rotary: Q, U
Stationary: A, B, Q, U
Rubber parts: P, E, V, K, M

Operating limits:
(look at working conditions page 112)

p⩽	25 bar
t=	-35 ÷ 220°C
v⩽	20 m/s

EN 12756 (DIN 24960)

D1	D6	D7	D3	L1K	L3	L6	L5	D8
18	27	33	33	37.5	19.5	5	2	3
20	29	35	35	37.5	19.5	5	2	3
22	31	37	37	37.5	19.5	5	2	3
24	33	39	39	40	20.5	5	2	3
25	34	40	40	40	20.5	5	2	3
28	37	43	43	42.5	21.5	5	2	3
30	39	45	45	42.5	21.5	5	2	3
32	42	48	48	42.5	21.5	5	2	3
33	42	48	48	42.5	21.5	5	2	3
35	44	50	50	42.5	21.5	5	2	3
38	49	56	56	45	24	6	2	4
40	51	58	58	45	24	6	2	4
43	54	61	61	45	24	6	2	4
45	56	63	63	45	24	6	2	4
48	59	66	66	45	24	6	2	4
50	62	70	70	47.5	25	6	2.5	4
53	65	73	73	47.5	25	6	2.5	4
55	67	75	75	47.5	25	6	2.5	4
58	70	78	78	52.5	28	6	2.5	4
60	72	80	80	52.5	28	6	2.5	4
63	75	83	83	52.5	28	6	2.5	4
65	77	85	85	52.5	28	6	2.5	4
68	81	90	90	52.5	28	7	2.5	4
70	83	92	92	60	34	7	2.5	4
75	88	97	97	60	34	7	2.5	4
80	95	105	105	60	34	7	3	4
85	100	110	110	60	34	7	3	4
90	105	115	115	65	39	7	3	4
95	110	120	120	65	39	7	3	4
100	115	125	125	65	39	7	3	4

Robust solid-seal
Spring, product protected
Spring stationary

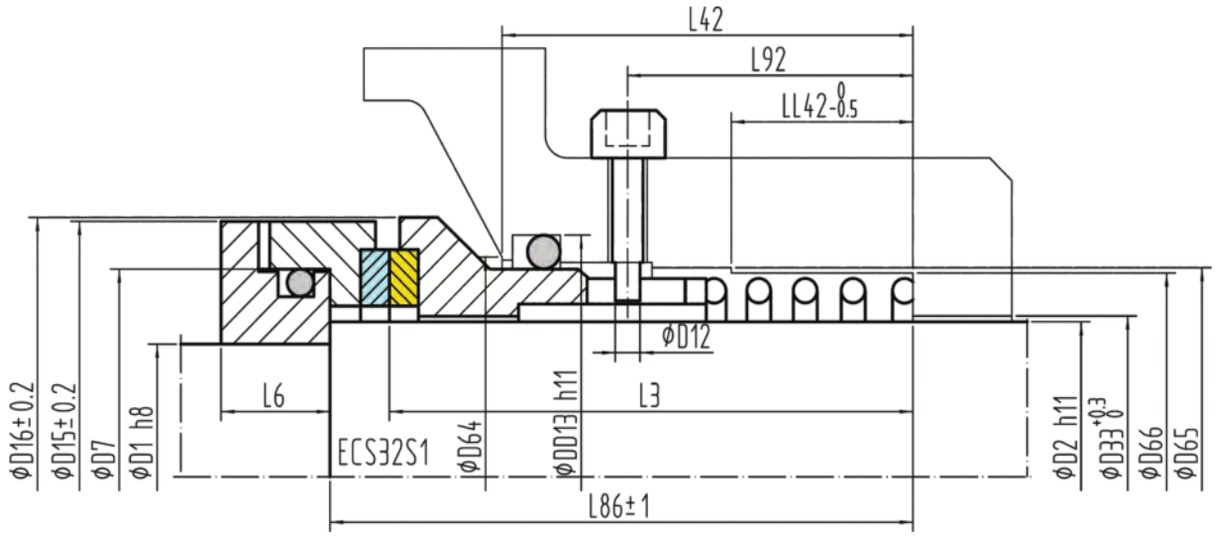

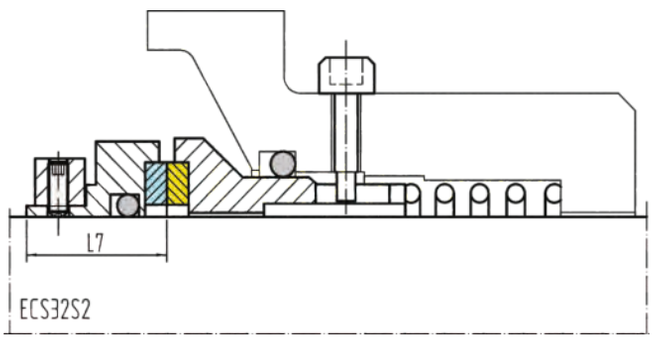

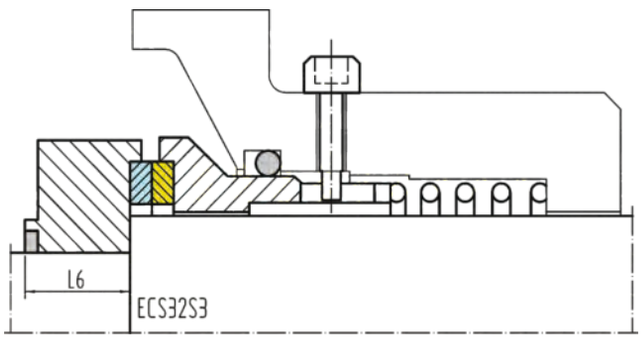

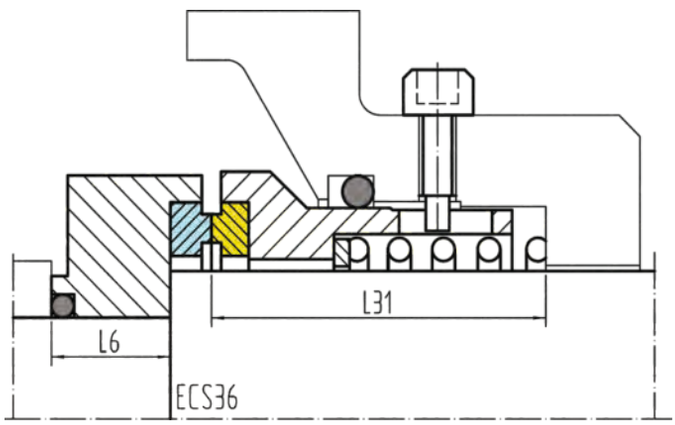

Materials:
Rotary: Q, U
Stationary: Q, U
Rubber parts: P, E, V, K, M

Operating limits:
(look at working conditions page 112)

p⩽	25 bar
t=	-35 ÷ 140°C
v⩽	15 m/s

Special fitting dimensions

D1	D2	D7	D12	D15	D16	D33	D64	D65	D66	DD13	L3	L31	L6	L7	L42	L86	L92	LL42
15	20	29.3	3	40	42	21.0	32	30.4	30.0	36.2	51.5	39.5	10	24.5	36.8	56.0	22.8	14
20	25	34.3	3	46	48	26.0	37	35.4	34.0	41.2	54.0	41.5	10	24.5	39.3	58.5	25.3	14
25	30	39.0	3	51	53	31.0	43	40.4	40.0	49.2	55.5	41.0	12	26.5	40.8	60.0	24.8	13
30	35	44.0	3	56	58	36.0	48	45.4	45.0	54.2	58.0	45.5	12	28.0	41.8	64.0	25.8	15
35	40	54.0	3	66	68	41.0	58	55.6	54.0	64.2	68.0	45.5	15	31.0	51.3	74.0	34.3	20
40	45	59.0	3	71	73	46.0	63	60.6	59.0	69.2	69.0	47.0	15	31.0	52.3	75.0	35.3	23
45	50	64.0	4	77	78	51.0	68	65.6	64.0	74.2	74.5	47.0	15	31.5	57.3	81.0	39.7	26
50	55	69.0	4	83	83	56.0	73	70.6	69.0	79.2	76.5	49.0	15	31.5	59.3	83.0	41.7	29
55	60	74.0	4	88	88	61.0	78	75.6	74.0	84.2	78.5	54.0	15	33.5	61.3	85.0	43.7	29
57	65	79.0	4	93	93	66.0	83	80.6	79.0	89.2	77.0	51.5	16	33.5	57.8	83.5	39.2	25
62	70	84.0	4	98	98	71.0	88	85.8	84.0	94.2	80.5	54.5	16	34.0	60.8	87.5	42.2	27
67	75	89.0	4	103	103	76.0	93	90.8	89.0	99.2	88.5	59.0	16	34.0	68.8	95.5	50.2	37
72	80	94.0	4	108	108	81.0	98	95.8	94.0	104.2	90.5	69.5	18	34.0	70.8	97.5	52.2	37
75	85	104.0	4	118	118	86.5	108	105.8	103.0	114.2	91.0	73.0	20	37.0	70.8	98.0	50.2	34
80	90	109.0	5	127	127	91.5	113	110.8	109.0	119.2	102.5	70.0	23	44.0	77.3	113.5	56.0	40
85	95	114.1	5	135	140	96.5	119	115.8	113.0	127.3	105.0	80.0	26	48.0	74.3	116.0	51.0	35
90	100	119.1	5	140	145	101.5	124	120.8	120.0	132.3	115.0	85.0	27	48.0	84.3	126.0	61.0	45
95	105	124.1	5	145	150	106.5	129	125.8	125.0	137.3	116.0	83.0	32	48.0	82.0	127.0	58.0	42
100	110	134.1	5	155	160	111.5	139	135.8	130.0	147.3	115.0	90.0	32	48.0	79.0	126.0	54.5	33
105	115	139.1	5	163	170	116.5	144	140.8	136.5	152.3	124.0	90.0	35	53.5	85.0	137.0	61.0	43
110	120	144.1	5	168	175	121.5	149	145.8	143.5	157.3	117.0	92.0	35	53.5	77.0	130.0	53.0	35
115	125	149.1	5	173	180	126.5	154	150.8	147.5	162.3	118.0	-	35	53.5	79.0	131.0	55.0	35
120	130	154.1	5	178	185	131.5	159	155.8	154.5	167.3	125.0	-	35	53.5	85.0	138.0	61.0	44

Universal chemistry seal
Conical spring rotating
Massive, brazed or shrinked seal rings

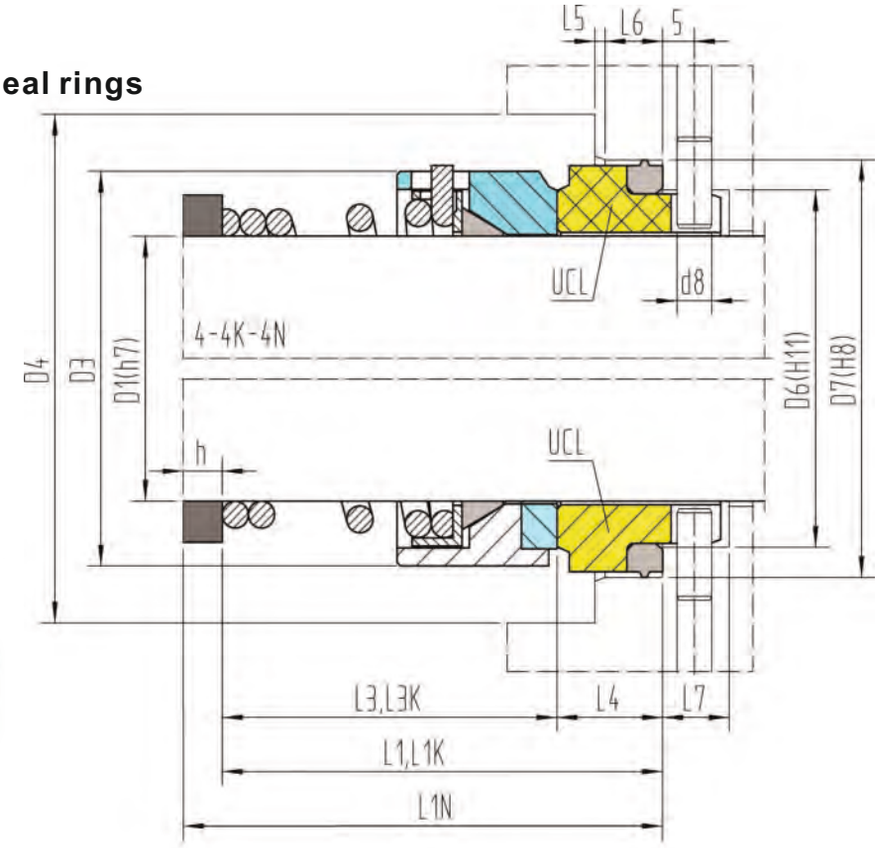

Materials:
Rotary: B, G, Q, U, M
Stationary: B, Q, U
Rubber parts: T

L1=L3+L4
L1K=L3K+L4
L1N=L3+H+L4

Operating limits:
(look at working conditions page 112)

4-4K-4N	
p≤	12 bar (16bar)
t=	-35 ÷ 140°C (180°C)
v≤	15 m/s

EN 12756 (DIN 24960) — **UCC UCL**

D1	D6	D7	D3	D4	L1K	L3K	L1N	L1	L3	L4	L6	L5	H	D8	L7
10	17	21	21	22	32.5	25.5	40	22	15	7	4	1.5	18	3	8.5
12	19	23	22	24	32.5	25.5	40	25	18	7	4	1.5	15	3	8.5
14	21	25	24	26	35	28	40	29	22	7	4	1.5	11	3	8.5
16	23	27	26	28	35	28	40	30	23	7	4	1.5	10	3	8.5
18	27	33	29	34	37.5	27.5	45	34	24	10	5	2	11	3	9
20	29	35	30	36	37.5	27.5	45	35	25	10	5	2	10	3	9
22	31	37	34	38	37.5	27.5	45	35	25	10	5	2	10	3	9
24	33	39	35	40	40	30	50	37	27	10	5	2	13	3	9
25	34	40	37	41	40	30	50	37	27	10	5	2	13	3	9
28	37	43	42	44	42.5	32.5	50	39	29	10	5	2	11	3	9
30	39	45	45	48+	42.5	32.5	50	40	30	10	5	2	10	3	9
32	42	48	45	48	42.5	32.5	55	40	30	10	5	2	15	3	9
33	42	48	48	54+	42.5	32.5	55	49	39	10	5	2	6	3	9
35	44	50	50	54+	42.5	32.5	55	49	39	10	5	2	6	3	9
38	49	56	54	58	45	32	55	55	42	13	6	2	—	4	9
40	51	58	56	60	45	32	55	55	42	13	6	2	—	4	9
43	54	61	60	63	45	32	60	60	47	13	6	2	—	4	9
45	56	63	64	65	45	32	60	60	47	13	6	2	—	4	9
48	59	66	67	73+	45	32	60	60	47	13	6	2	—	4	9
50	62	70	69	75+	47.5	33.5	60	60	46	14	6	2.5	—	4	9
53	65	73	74	73	47.5	33.5	70	70	56	14	6	2.5	—	4	9
55	67	75	74	80+	47.5	33.5	70	70	56	14	6	2.5	—	4	9
58	70	78	80	83	52.5	38.5	70	70	56	14	6	2.5	—	4	9
60	72	80	80	85	52.5	38.5	70	70	56	14	6	2.5	—	4	9
63	75	83	87	88	52.5	38.5	70	70	56	14	6	2.5	—	4	9
65	77	85	87	90	52.5	38.5	80	80	66	14	6	2.5	—	4	9
68	81	90	92	93	52.5	36.5	80	80	64	16	7	2.5	—	4	9
70	83	92	92	95	60	44	80	80	64	16	7	2.5	—	4	9
75	88	97	97	104	60	44	80	80	64	16	7	2.5	—	4	9
80	95	105	102	109	60	42	90	90	72	18	7	3	—	4	9
85	100	110	110	114	60	42	90	90	72	18	7	3	—	4	9
90	105	115	117	119	65	42	90	90	72	18	7	3	—	4	9
95	110	120	122	131+	65	42	90	90	72	18	7	3	—	4	9
100	115	125	127	137+	65	42	90	90	72	18	7	3	—	4	9

+ This size is larger than the minimum prescribed by EN 12756
Spacer ring is not included in the delivery of the mechanical seal.

Universal chemistry seal
Conical spring rotating
Massive, brazed or shrinked seal rings

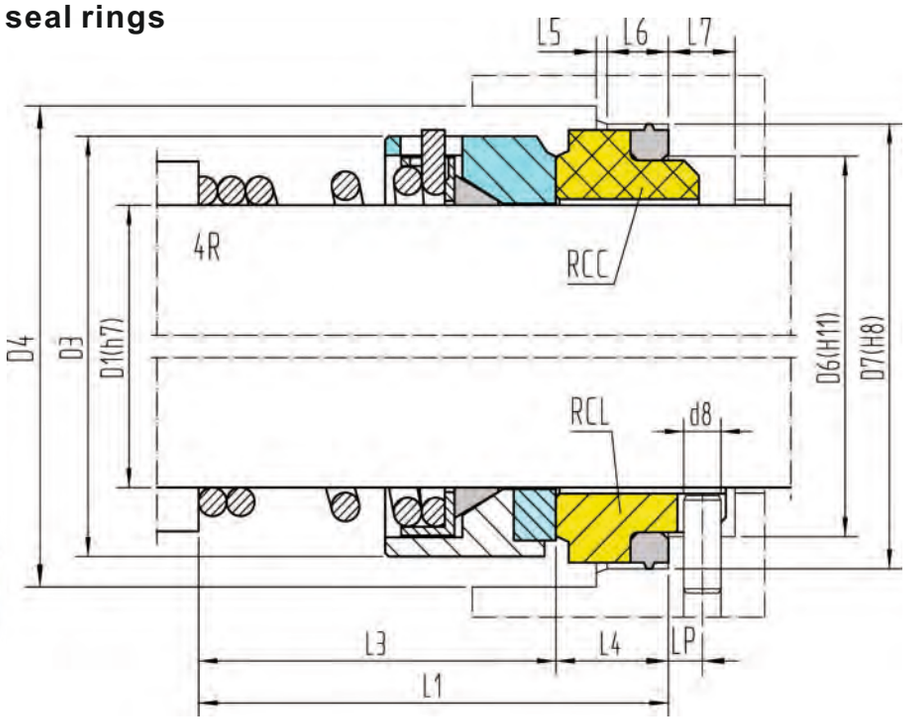

Materials:
Rotary: B, G, Q, U, M
Stationary: B, Q, U
Rubber parts: T

Operating limits:
(look at working conditions page 112)

4R	
p⩽	12 bar(16bar)
t=	-35 ÷ 140°C (180°C)
v⩽	15 m/s

Special fitting dimensions — RCC RCL

D1	D6	D7	D3	D4	L1	L3	L4	L6	L5	D8	L7	Lp
6	10.6	13.1	14	20	19.5	15	4.5	2	1.2	2	6	3.5
7÷9	13	17.1	17	23	20.5	15	5.5	2.8	1.2	2	6.2	3.5
10	14	18.1	18.4	24	20.5	15	5.5	2.8	1.2	2	6.2	3.5
11÷12	16.5	20.6	21	27	23.5	18	5.5	2.8	1.2	2	6.2	3.5
13÷14	19	23.1	24	30	28	22	6	2.8	1.2	2	6.7	4
15	21	26.9	25.4	31	29	22	7	3.7	1.3	2.5	7.6	4
16÷17	21	26.9	26	34	30	23	7	3.7	1.3	2.5	7.6	4
18	25	30.9	29	37	32	24	8	3.7	1.3	3	8.5	4.5
19÷20	25	30.9	30	39	33	25	8	3.7	1.3	3	8.5	4.5
21÷22	30	35.4	34	42	33	25	8	3.7	1.8	3.5	8.5	5
23÷24	30	35.4	35	44	35	27	8	3.7	1.8	3.5	8.5	5
25÷27	33	38.2	37	48	35.5	27	8.5	3.7	1.8	4	9.1	5
28	38	43.3	42	50	38	29	9	3.7	1.8	4	9.6	6
29÷32	38	43.3	45	53	39	30	9	3.7	1.8	4	9.6	6
33÷34	45	53.5	48	64	50.5	39	11.5	5.4	2.1	5	12	7.5
35÷37	45	53.5	50	64	50.5	39	11.5	5.4	2.1	5	12	7.5
38÷43	52	60.5	54	69	50.5	39	11.5	5.4	2.1	5	12	7.5
44÷45	57	65.5	60	76	52.5	41	11.5	5.4	2.1	5	13	8.5
46÷49	57	65.5	67	80	52.5	41	11.5	5.4	2.1	5	13	8.5
50	64	72.5	69	82	56.5	45	11.5	5.4	2.1	5	13	8.5
55	64	72.5	74	87	58.5	47	11.5	5.4	2.1	5	13	8.5
60	72	79.3	80	93	60.5	49	11.5	5.4	2.1	5	13.5	8.5
65	77	84.5	87	102	62.5	51	11.5	5.4	2.1	5	13.5	8.5
70	82	89.5	92	107	62.5	51	11.5	5.4	2.1	5	13.5	8.5
75	87	94.5	97	113	68.5	57	11.5	5.4	2.1	5	13.5	8.5
80	92	99.5	102	117	70.5	59	11.5	5.4	2.1	5	13.5	8.5
85	98	105.5	110	126	72.5	59	13.5	5.4	2.6	5	13.5	8.5
90	105	111.5	117	131	75.5	62	13.5	5.4	2.6	5	13.5	8.5
95	110	116.5	122	138	75.5	62	13.5	5.4	2.6	5	13.5	8.5
100	114	119.5	127	144	88.5	75	13.5	5.4	2.6	5	13.5	8.5
110	124	132.2	143	168	92.5	75	17.5	7.1	3.9	5	13.5	8.5
120	134	142.2	155	178	102.5	85	17.5	7.1	3.9	5	13.5	8.5
130	145	153.2	166	190	112.5	95	17.5	7.1	3.9	5	13.5	8.5
135	152	161.2	179	201	113.5	95	18.5	7.1	3.9	5	13.5	8.5
140	157	164.3	186	206	118.5	100	18.5	7.1	3.9	5	13.5	8.5
150	167	174.2	199	219	128.5	110	18.5	7.1	3.9	5	13.5	8.5
160	188	195	215	239	141	120	21	9.1	3.9	5	15.5	8.5

Chemistry norm seal
Massive seal ring frame with flushing whole for selfcleaning
Massiv, brazed or shrinked seal rings

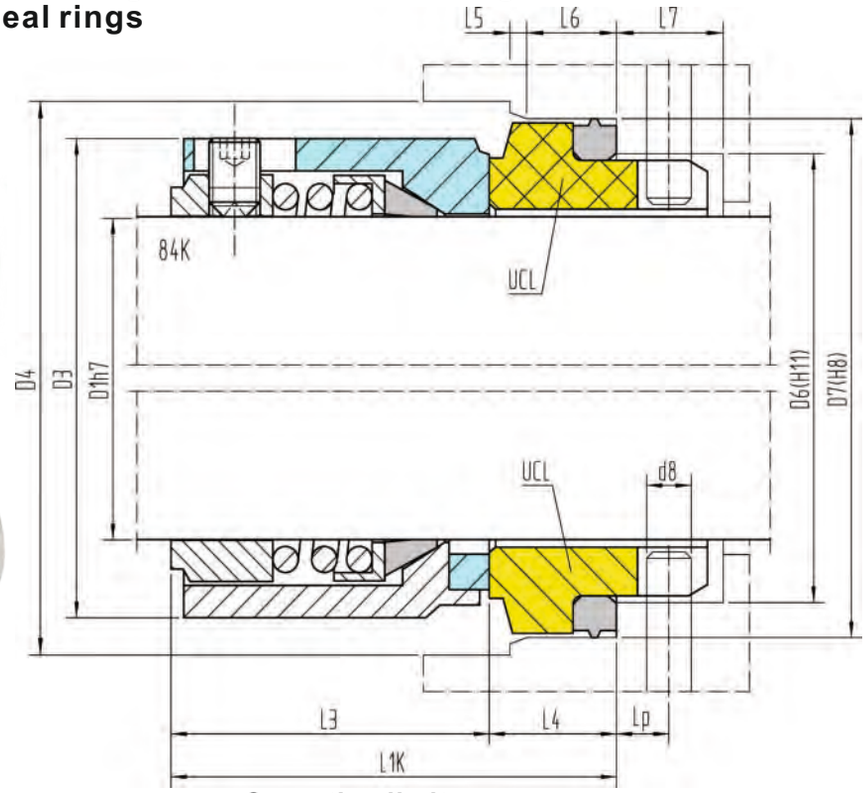

Materials:
Rotary: G, Q, U, M
Stationary: B, Q, U
Rubber parts: T

Operating limits:
(look at working conditions page 112)

84K	
p≤	12 bar
t=	-35 ÷ 140°C (180°C)
v≤	15 m/s

EN 12756 (DIN 24960)										UCC UCL	
D1	**D6**	**D7**	**D3**	**D4**	**L1K**	**L3**	**L4**	**L6**	**L5**	**D8**	**L7**
16	23	27	26	28	35	28	7	4	1.5	3	8.5
18	27	33	29	34	37.5	27.5	10	5	2	3	9
20	29	35	30	36	37.5	27.5	10	5	2	3	9
22	31	37	34	38	37.5	27.5	10	5	2	3	9
24	33	39	35	40	40	30	10	5	2	3	9
25	34	40	37	41	40	30	10	5	2	3	9
28	37	43	42	44	42.5	32.5	10	5	2	3	9
30	39	45	45	48+	42.5	32.5	10	5	2	3	9
32	42	48	45	48	42.5	32.5	10	5	2	3	9
33	42	48	48	54+	42.5	32.5	10	5	2	3	9
35	44	50	50	54+	42.5	32.5	10	5	2	3	9
38	49	56	54	58	45	32	13	6	2	4	9
40	51	58	56	60	45	32	13	6	2	4	9
43	54	61	60	63	45	32	13	6	2	4	9
45	56	63	64	65	45	32	13	6	2	4	9
48	59	66	67	73+	45	32	13	6	2	4	9
50	62	70	69	75+	47.5	33.5	14	6	2.5	4	9
53	65	73	74	73	47.5	33.5	14	6	2.5	4	9
55	67	75	74	80+	47.5	33.5	14	6	2.5	4	9
58	70	78	80	83	52.5	38.5	14	6	2.5	4	9
60	72	80	80	85	52.5	38.5	14	6	2.5	4	9
63	75	83	87	88	52.5	38.5	14	6	2.5	4	9
65	77	85	87	90	52.5	38.5	14	6	2.5	4	9
68	81	90	92	93	52.5	36.5	16	7	2.5	4	9
70	83	92	92	95	60	44	16	7	2.5	4	9
75	88	97	97	104	60	44	16	7	2.5	4	9
80	95	105	102	109	60	42	18	7	3	4	9
85	100	110	110	114	60	42	18	7	3	4	9
90	105	115	117	119	65	47	18	7	3	4	9
95	110	120	122	131+	65	47	18	7	3	4	9
100	115	125	127	137+	65	47	18	7	3	4	9

+ This size is larger than the minimum prescribed by EN 12756

Universal norm seal
Massive replaceable seal rings
Multiple springs

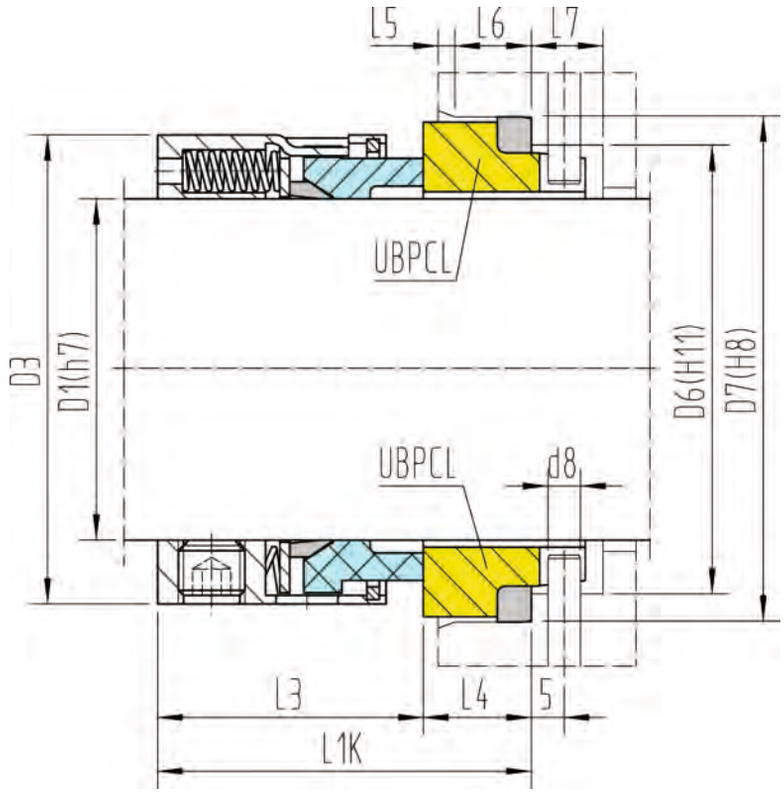

Materials:
Rotary: A, B, Q, U
Stationary: Q, U, V
Rubber parts: T

Operating limits:
(look at working conditions page 112)

p⩽	16 bar
t=	-35 ÷ 140°C (180°C)
v⩽	15 m/s

EN 12756 (DIN 24960) **UBPCL**

D1	D6	D7	D3	L1K	L3	L4	L6	L5	D8	L7
14	21	25	24	35	23	12	4	1.5	3	8.5
16	23	27	26	35	23	12	4	1.5	3	8.5
18	27	33	32	37.5	24	13.5	5	2	3	9
20	29	35	34	37.5	24	13.5	5	2	3	9
22	31	37	36	37.5	24	13.5	5	2	3	9
24	33	39	38	40	26.5	13.5	5	2	3	9
25	34	40	39	40	27	13	5	2	3	9
28	37	43	42	42.5	30	12.5	5	2	3	9
30	39	45	44	42.5	30.5	12	5	2	3	9
32	42	48	46	42.5	30.5	12	5	2	3	9
33	42	48	47	42.5	30.5	12	5	2	3	9
35	44	50	49	42.5	30.5	12	5	2	3	9
38	49	56	54	45	32	13	6	2	4	9
40	51	58	56	45	32	13	6	2	4	9
43	54	61	59	45	32	13	6	2	4	9
45	56	63	61	45	32	13	6	2	4	9
48	59	66	64	45	32	13	6	2	4	9
50	62	70	66	47.5	34	13.5	6	2.5	4	9
53	65	73	69	47.5	34	13.5	6	2.5	4	9
55	67	75	71	47.5	34	13.5	6	2.5	4	9
58	70	78	78	52.5	39	13.5	6	2.5	4	9
60	72	80	80	52.5	39	13.5	6	2.5	4	9
63	75	83	83	52.5	39	13.5	6	2.5	4	9
65	77	85	85	52.5	39	13.5	6	2.5	4	9
68	81	90	88	52.5	39	13.5	7	2.5	4	9
70	83	92	90	60	45.5	14.5	7	2.5	4	9
75	88	97	95	60	45.5	14.5	7	2.5	4	9
80	95	105	104	60	45	15	7	3	4	9
85	100	110	109	60	45	15	7	3	4	9
90	105	115	114	65	50	15	7	3	4	9
95	110	120	119	65	50	15	7	3	4	9
100	115	125	124	65	50	15	7	3	4	9

Universal chemistry norm seal for high pressure applications
Stepped shaft/shaft sleeve
Massive replaceable seal rings
Multiple springs

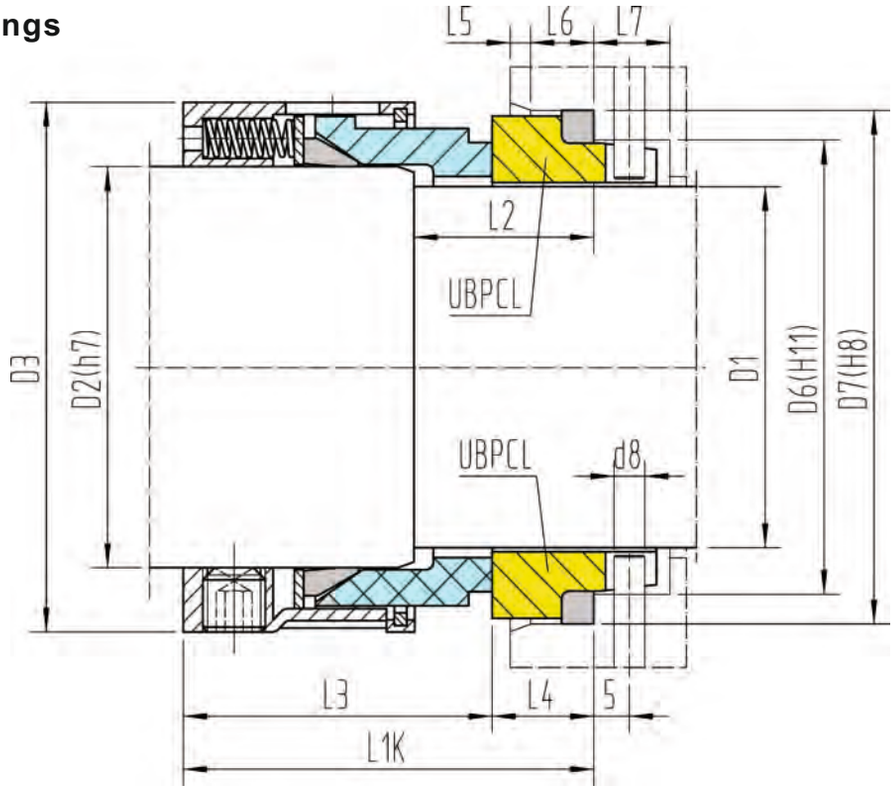

Materials:
Rotary: A, B, Q, U
Stationary: Q, U, V
Rubber parts: T

Operating limits:
(look at working conditions page 112)

p≤	25 bar
t=	-35 ÷ 140°C (180°C)
v≤	20m/s

EN 12756 (DIN 24960) **UBPCL**

D1	D2	D6	D7	D3	L1K	L3	L4	L2	L6	L5	D8	L7
14	18	21	25	32	42.5	30.5	12	18	4	1.5	3	8.5
16	20	23	27	34	42.5	30.5	12	18	4	1.5	3	8.5
18	22	27	33	36	45	31.5	13.5	20	5	2	3	9
20	24	29	35	38	45	31.5	13.5	20	5	2	3	9
22	26	31	37	40	45	31.5	13.5	20	5	2	3	9
24	28	33	39	42	47.5	34	13.5	20	5	2	3	9
25	30	34	40	44	47.5	34.5	13	20	5	2	3	9
28	33	37	43	47	50	37.5	12.5	20	5	2	3	9
30	35	39	45	49	50	38	12	20	5	2	3	9
32	38	42	48	54	50	38	12	20	5	2	3	9
33	38	42	48	54	50	38	12	20	5	2	3	9
35	40	44	50	56	50	38	12	20	5	2	3	9
38	43	49	56	59	52.5	39.5	13	23	6	2	4	9
40	45	51	58	61	52.5	39.5	13	23	6	2	4	9
43	48	54	61	64	52.5	39.5	13	23	6	2	4	9
45	50	56	63	66	52.5	39.5	13	23	6	2	4	9
48	53	59	66	69	52.5	39.5	13	23	6	2	4	9
50	55	62	70	71	57.5	44	13.5	25	6	2.5	4	9
53	58	65	73	78	57.5	44	13.5	25	6	2.5	4	9
55	60	67	75	80	57.5	44	13.5	25	6	2.5	4	9
58	63	70	78	83	62.5	49	13.5	25	6	2.5	4	9
60	65	72	80	85	62.5	49	13.5	25	6	2.5	4	9
63	68	75	83	88	62.5	49	13.5	25	6	2.5	4	9
65	70	77	85	90	62.5	49	13.5	25	6	2.5	4	9
70	75	83	92	95	70	55.5	14.5	28	7	2.5	4	9
75	80	88	97	104	70	55.5	14.5	28	7	2.5	4	9
80	85	95	105	109	70	55	15	28	7	3	4	9
85	90	100	110	114	75	60	15	28	7	3	4	9
90	95	105	115	119	75	60	15	28	7	3	4	9
95	100	110	120	124	75	60	15	28	7	3	4	9
100	105	115	125	129	75	60	15	28	7	3	4	9

Outside mounted universal seal
Counterpressure possible
Massive, brazed or shrinked seal rings

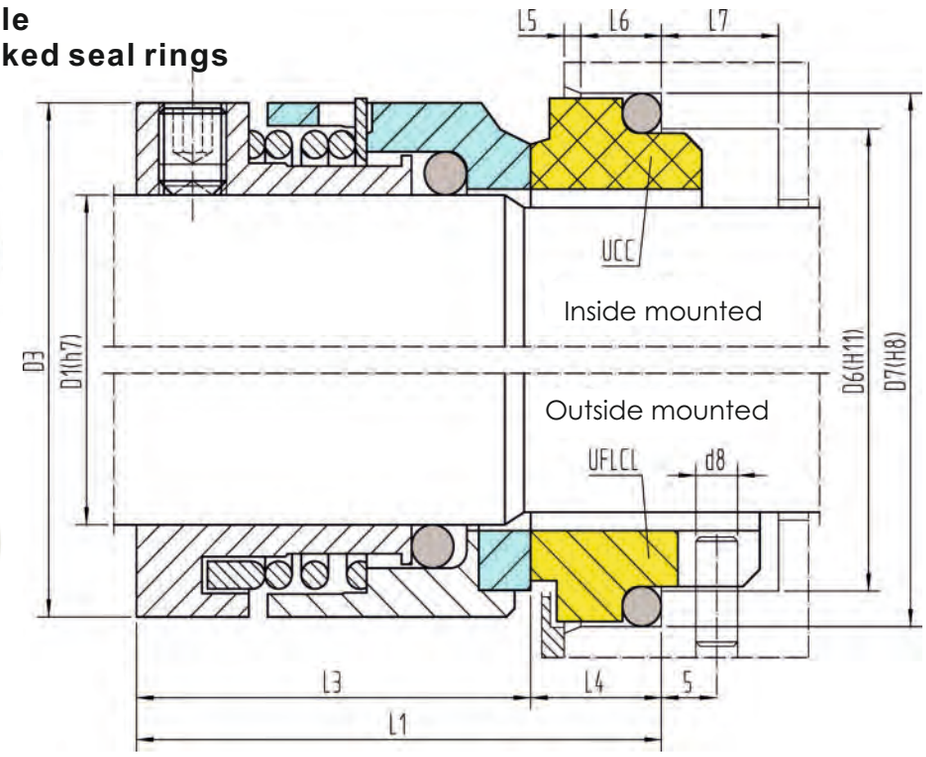

Optional as 7R with stationary RCC or RCL available.

Materials:
Rotary: E, F, G, Q, U, V
Stationary: A, B, Q, U, Y
Rubber parts: P, E, V, K, M

Operating limits:
(look at working conditions page 112)

7	
p⩽	12 bar (16bar)
t=	-35 ÷ 140°C (180°C)
v⩽	15 m/s

EN 12756 (DIN 24960) **UCC UFLCL**

D1	D6	D7	D3	L1	L3	L4	L6	L5	D8	L7
10	17	21	22	29	22	7	4	1.5	3	8.5
12	19	23	24	31	24	7	4	1.5	3	8.5
14	21	25	27	33	26	7	4	1.5	3	8.5
16	23	27	31	34	27	7	4	1.5	3	8.5
18	27	33	33	38	28	10	5	2	3	9
20	29	35	37	41	31	10	5	2	3	9
22	31	37	39	41	31	10	5	2	3	9
24	33	39	42	44	34	10	5	2	3	9
25	34	40	43	45	35	10	5	2	3	9
28	37	43	47	47	37	10	5	2	3	9
30	39	45	50	49	39	10	5	2	3	9
32	42	48	52	49	39	10	5	2	3	9
33	42	48	54	54	44	10	5	2	3	9
35	44	50	56	54	44	10	5	2	3	9
38	49	56	62	60	47	13	6	2	4	9
40	51	58	64	60	47	13	6	2	4	9
43	54	61	69	60	47	13	6	2	4	9
45	56	63	71	64	51	13	6	2	4	9
48	59	66	74	64	51	13	6	2	4	9
50	62	70	77	68	54	14	6	2.5	4	9
53	65	73	83	71	57	14	6	2.5	4	9
55	67	75	83	71	57	14	6	2.5	4	9
58	70	78	89	71	57	14	6	2.5	4	9
60	72	80	89	71	57	14	6	2.5	4	9
63	75	83	97	74	60	14	6	2.5	4	9
65	77	85	97	74	60	14	6	2.5	4	9
68	81	90	104	76	60	16	7	2.5	4	9
70	83	92	104	76	60	16	7	2.5	4	9
75	88	97	100	96	80	16	7	2.5	4	9
80	95	105	106	103	85	18	7	3	4	9
85	100	110	115	106	88	18	7	3	4	9
90	105	115	118	111	93	18	7	3	4	9
95	110	120	128	115	97	18	7	3	4	9
100	115	125	137	126	108	18	7	3	4	9

Outside mounted universal seal
Short mounting length
Counterpressure possible
Massive or brazed seal rings

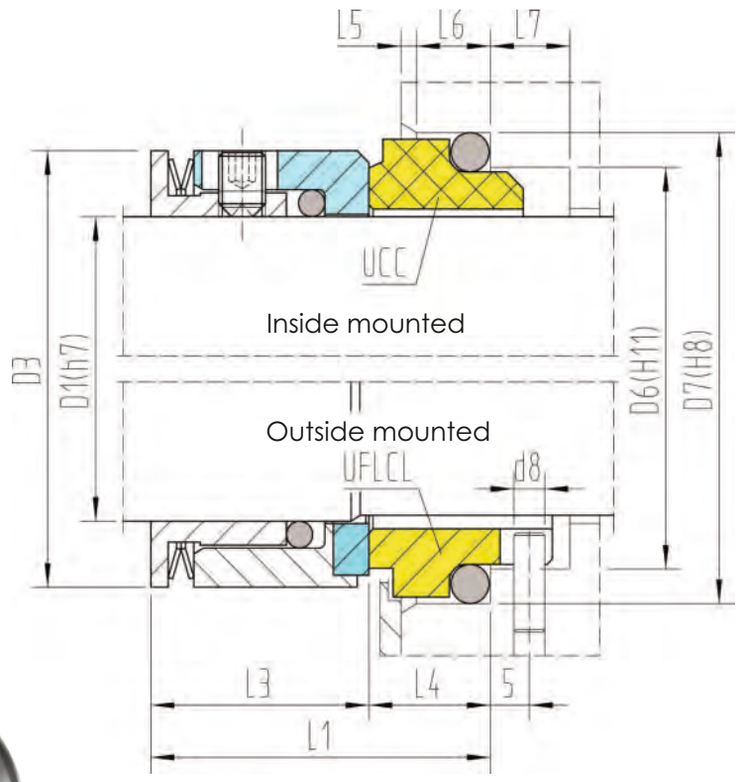

Materials:
Rotary: E, F, G, Q, U
Stationary: A, B, Q, U
Rubber parts: P, E, V, K, M

Optional with shrinked seal ring, however L1 different

Operating limits:
(look at working conditions page 112)

7K	
p≤	12 bar (16bar)
t=	-35 ÷ 140°C (180°C)
v≤	15 m/s
Axial movement	+0,5mm

EN 12756 (DIN 24960) **UCC UFLCL**

D1	D6	D7	D3	L1	L3	L4	L6	L5	D8	L7
10	17	21	21	25	18	7	4	1.5	3	8.5
12	19	23	23	25	18	7	4	1.5	3	8.5
14	21	25	25	25	18	7	4	1.5	3	8.5
16	23	27	26	26.1	19.1	7	4	1.5	3	8.5
18	27	33	29	29.1	19.1	10	5	2	3	9
20	29	35	32	29.1	19.1	10	5	2	3	9
22	31	37	35	29.1	19.1	10	5	2	3	9
24	33	39	37	29.1	19.1	10	5	2	3	9
25	34	40	37	29.1	19.1	10	5	2	3	9
28	37	43	41	29.1	19.1	10	5	2	3	9
30	39	45	43	29.1	19.1	10	5	2	3	9
32	42	48	47	29.1	19.1	10	5	2	3	9
33	42	48	48	29.1	19.1	10	5	2	3	9
35	44	50	49	29.1	19.1	10	5	2	3	9
38	49	56	53	34.1	21.1	13	6	2	4	9
40	51	58	55	34.1	21.1	13	6	2	4	9
43	54	61	60	34.1	21.1	13	6	2	4	9
45	56	63	60	34.1	21.1	13	6	2	4	9
48	59	66	65	34.1	21.1	13	6	2	4	9
50	62	70	65	35.1	21.1	14	6	2.5	4	9
53	65	73	74	36.1	22.1	14	6	2.5	4	9
55	67	75	74	36.1	22.1	14	6	2.5	4	9
58	70	78	79	39.8	25.8	14	6	2.5	4	9
60	72	80	79	39.8	25.8	14	6	2.5	4	9
63	75	83	87	39.8	25.8	14	6	2.5	4	9
65	77	85	87	39.8	25.8	14	6	2.5	4	9
68	81	90	93	41.8	25.8	16	7	2.5	4	9
70	83	92	93	41.8	25.8	16	7	2.5	4	9
75	88	97	98	41.8	25.8	16	7	2.5	4	9
80	95	105	104	43.8	25.8	18	7	3	4	9
85	100	110	108	43.8	25.8	18	7	3	4	9
90	105	115	113	43.8	25.8	18	7	3	4	9
95	110	120	118	43.8	25.8	18	7	3	4	9
100	115	125	123	43.8	25.8	18	7	3	4	9

Outside mounted universal seal
Short mounting length
Counterpressure possible
Massive or brazed seal ring

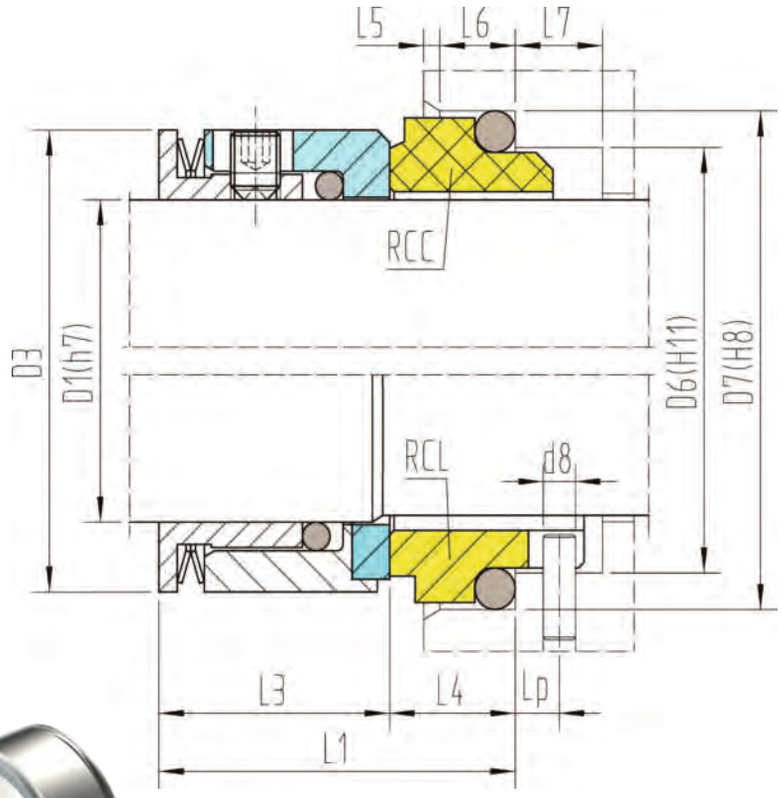

Materials:
Rotary: E, F, G, Q, U
Stationary: A, B, Q, U
Rubber parts: P, E, V, K, M

Optional with shrinked seal ring, however L1 different

Operating limits:
(look at working conditions page 112)

7KR	
p⩽	12 bar (16bar)
t=	-35 ÷ 140°C (180°C)
v⩽	15 m/s
Axial movement	+0,5mm

Special fitting dimensions — RCC RCL

D1	D6	D7	D3	L1	L3	L4	L6	L5	D8	L7	Lp
10	14	18.1	21	23.5	18	5.5	2.8	1.2	2	6.2	3.5
11÷12	16.5	20.6	23	23.5	18	5.5	2.8	1.2	2	6.2	3.5
13	19	23.1	25	24	18	6	2.8	1.2	2	6.7	4
14	19	23.1	25	24	18	6	2.8	1.2	2	6.7	4
15	21	26.9	26	26.1	19.1	7	3.7	1.3	2.5	7.6	4
16÷17	21	26.9	29	26.1	19.1	7	3.7	1.3	2.5	7.6	4
18	25	30.9	29	27.1	19.1	8	3.7	1.3	3	8.5	4.5
19	25	30.9	32	27.1	19.1	8	3.7	1.3	3	8.5	4.5
20	25	30.9	32	27.1	19.1	8	3.7	1.3	3	8.5	4.5
21÷22	30	35.4	35	27.1	19.1	8	3.7	1.8	3.5	8.5	5
23	30	35.4	37	27.1	19.1	8	3.7	1.8	3.5	8.5	5
24	30	35.4	37	27.1	19.1	8	3.7	1.8	3.5	8.5	5
25÷27	33	38.2	41	27.6	19.1	8.5	3.7	1.8	4	9.1	5
28	38	43.3	41	28.1	19.1	9	3.7	1.8	4	9.6	6
29÷32	38	43.3	47	28.1	19.1	9	3.7	1.8	4	9.6	6
33	45	53.5	48	30.6	19.1	11.5	5.4	2.1	5	12	7.5
35	45	53.5	49	30.6	19.1	11.5	5.4	2.1	5	12	7.5
38	52	60.5	53	32.6	21.1	11.5	5.4	2.1	5	12	7.5
40	52	60.5	55	32.6	21.1	11.5	5.4	2.1	5	12	7.5
43	52	60.5	60	32.6	21.1	11.5	5.4	2.1	5	12	7.5
44	57	65.5	60	32.6	21.1	11.5	5.4	2.1	5	13	8.5
45	57	65.5	60	32.6	21.1	11.5	5.4	2.1	5	13	8.5
48	57	65.5	65	32.6	21.1	11.5	5.4	2.1	5	13	8.5
50	64	72.5	65	32.6	21.1	11.5	5.4	2.1	5	13	8.5
55	64	72.5	74	33.6	22.1	11.5	5.4	2.1	5	13	8.5
60	72	79.3	79	37.3	25.8	11.5	5.4	2.1	5	13.5	8.5
65	77	84.5	87	37.3	25.8	11.5	5.4	2.1	5	13.5	8.5
70	82	89.5	93	37.3	25.8	11.5	5.4	2.1	5	13.5	8.5
75	87	94.5	98	37.3	25.8	11.5	5.4	2.1	5	13.5	8.5
80	92	99.5	104	37.3	25.8	11.5	5.4	2.1	5	13.5	8.5
85	98	105.5	108	39.3	25.8	13.5	5.4	2.6	5	13.5	8.5
90	105	111.5	113	39.3	25.8	13.5	5.4	2.6	5	13.5	8.5
95	110	116.5	118	39.3	25.8	13.5	5.4	2.6	5	13.5	8.5
100	114	119.5	123	39.3	25.8	13.5	5.4	2.6	5	13.5	8.5

Outside mounted universal seal
Counterpressure possible
Balanced at inside loading
Independent of rotation

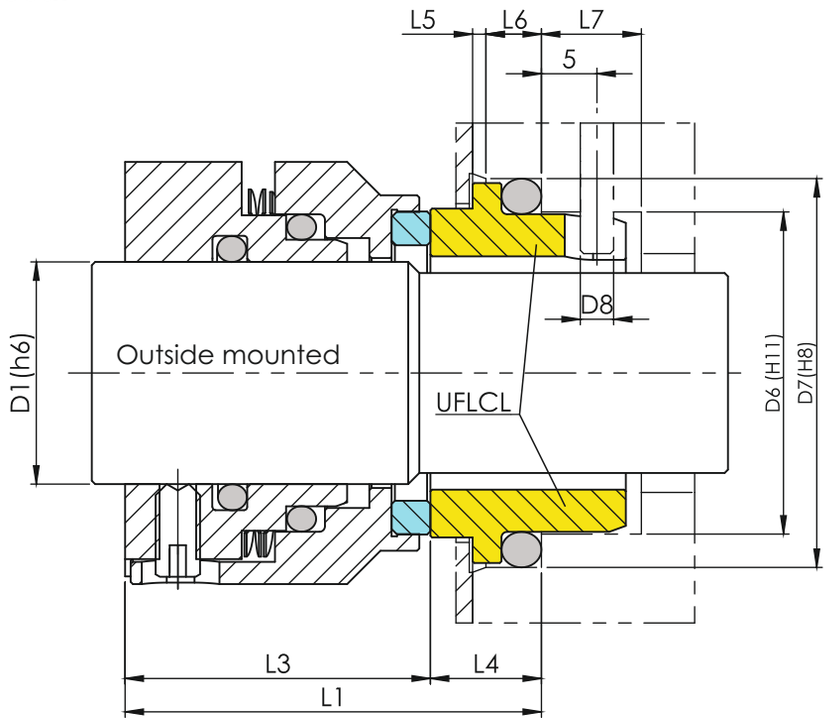

Materials:
Rotary: E, F, G, Q, U
Stationary: A, B, U, Y
Rubber parts: P, E, V, K, M

Operating limits:
(look at working conditions page 112)

7EK	
p⩽	25 bar
t=	-35 ÷ 140°C
v⩽	15 m/s

EN 12756 (DIN 24960)									UFLCL
D1	**D6**	**D7**	**L1K**	**L3**	**L4**	**L6**	**L5**	**D8**	**L7**
20	29	35	37.5	27.5	10	5	2	3	9
22	31	37	37.5	27.5	10	5	2	3	9
24	33	39	40	30	10	5	2	3	9
25	34	40	40	30	10	5	2	3	9
28	37	43	42.5	32.5	10	5	2	3	9
30	39	45	42.5	32.5	10	5	2	3	9
32	42	48	42.5	32.5	10	5	2	3	9
33	42	48	42.5	32.5	10	5	2	3	9
35	44	50	42.5	32.5	10	5	2	3	9
38	49	56	45	32	13	6	2	4	9
40	51	58	45	32	13	6	2	4	9
43	54	61	45	32	13	6	2	4	9
45	56	63	45	32	13	6	2	4	9
48	59	66	45	32	13	6	2	4	9
50	62	70	47.5	33.5	14	6	2.5	4	9
53	65	73	47.5	33.5	14	6	2.5	4	9
55	67	75	47.5	33.5	14	6	2.5	4	9
58	70	78	52.5	38.5	14	6	2.5	4	9
60	72	80	52.5	38.5	14	6	2.5	4	9
63	75	83	52.5	38.5	14	6	2.5	4	9
65	77	85	52.5	38.5	14	6	2.5	4	9
68	91	90	52.5	36.5	16	7	2.5	4	9
70	83	92	60	44	16	7	2.5	4	9
75	88	97	60	44	16	7	2.5	4	9
80	95	105	60	42	18	7	3	4	9
85	100	110	60	42	18	7	3	4	9
90	105	115	65	47	18	7	3	4	9
95	110	120	65	47	18	7	3	4	9
100	115	125	65	47	18	7	3	4	9

Special outside mounted seal
Counterpressure possible
Clamping sleeve, shaft protecting

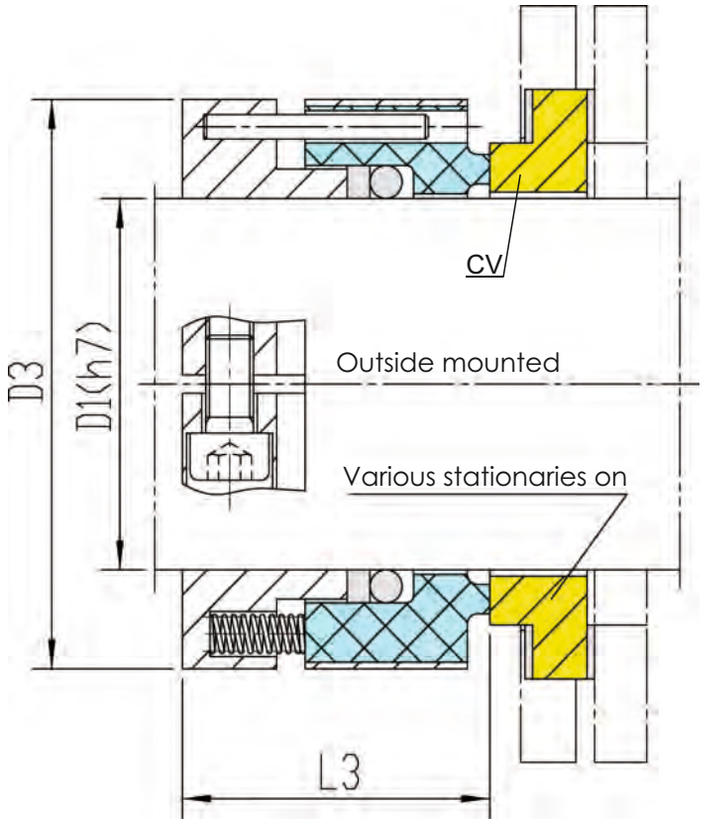

Materials:
Rotary: A, B, Q, U
Stationary: on demand
Rubber parts: P, E, V, K, M

Operating limits:
(look at working conditions page 112)

p⩽	12 bar
t=	-35 ÷ 180°C
v⩽	15m/s

Special fitting dimensions

D1	D3	L3
24	49	38
25	51	38
28	54	38
30	57	38
33	59	38
35	60	38
38	63	38
40	67	38
43	68	38
45	70	38
48	74	38
50	76	38
55	79	38
60	86	38
65	92	38
70	98	41
75	104	41
80	108	41
85	114	41
90	118	41
95	123	41
100	129	41

Special outside mounted PTFE seal
Chemistry industry
Counterpressure possible
Clamping sleeve, shaft protecting

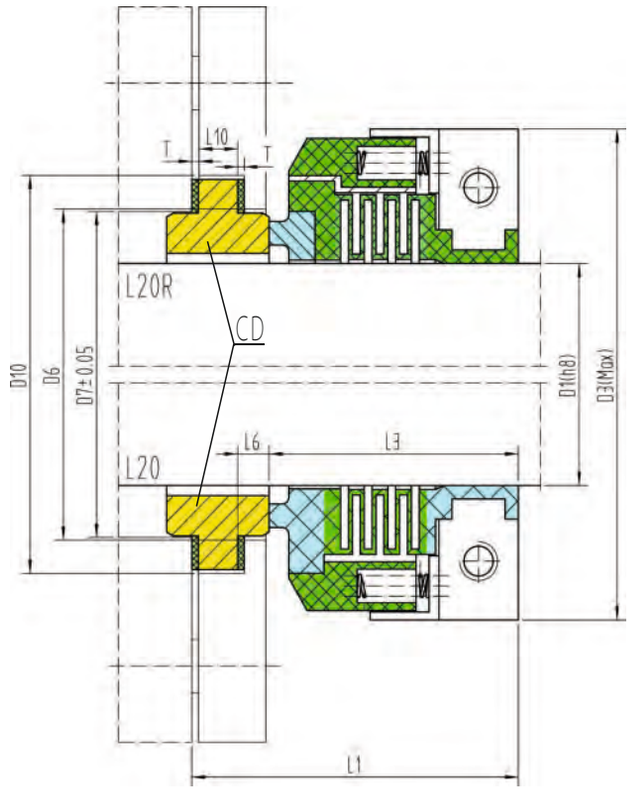

Materials:
Rotary: B, Q, Y
Stationary: V, Q, Y
Rubber parts: T

Operating limits:
(look at working conditions page 112)

p≤	10 bar
t=	-40 ÷ 120°C
v≤	15 m/s

Special fitting dimensions

D1	D1 Zoll	D3	D6	D7	D10	L1	L3	L6	L10	T
16	0,750	54	37.5	36.51	48	44.6	31	4.8	8	0.8
18	-	54	37.5	36.51	48	44.6	31	4.8	8	0.8
20	0,875	57	40.5	39.69	51	44.6	31	4.8	8	0.8
22	-	57	40.5	39.69	51	44.6	31	4.8	8	0.8
24	1,000	61	43.5	42.86	54	46.6	33	4.8	8	0.8
25	-	61	43.5	42.86	54	46.6	33	4.8	8	0.8
28	1,125	67	51.5	50.80	61	52.6	36	5.5	9.5	1.6
30	1,250	70	55.0	53.98	68	54.5	37	6.4	9.5	1.6
32	1,250	70	55.0	53.98	68	54.5	37	6.4	9.5	1.6
33	1,375	73	58.0	57.15	71	55.5	38	6.4	9.5	1.6
35	-	73	58.0	57.15	71	55.5	38	6.4	9.5	1.6
38	1,500	76	64.5	63.50	77	55.5	38	6.4	9.5	1.6
40	1,625	80	67.5	66.68	80	57.5	40	6.4	9.5	1.6
43	1,750	83	71.0	69.85	83	57.5	40	6.4	9.5	1.6
45	-	83	71.0	69.85	83	57.5	40	6.4	9.5	1.6
-	1,875	86	74.0	73.03	90	63.7	43	6.4	12.7	1.6
48	2,000	89	80.0	79.38	96	63.7	43	6.4	12.7	1.6
50	-	89	80.0	79.38	96	63.7	43	6.4	12.7	1.6
53	2,125	103	83.5	82.55	99	73.7	53	6.4	12.7	1.6
55	2,250	107	86.5	85.73	102	73.7	53	6.4	12.7	1.6
58	2,375	110	89.5	88.90	106	73.7	53	6.4	12.7	1.6
60	-	110	89.5	88.90	106	73.7	53	6.4	12.7	1.6
63	2,500	113	93.0	92.08	109	73.7	53	6.4	12.7	1.6
65	2,625	116	96.0	95.25	112	73.7	53	6.4	12.7	1.6
68	2,750	118	99.0	98.43	115	73.7	53	6.4	12.7	1.6
70	-	118	99.0	98.43	115	73.7	53	6.4	12.7	1.6
-	2,875	122	102.5	101.60	118	73.7	53	6.4	12.7	1.6
75	3,000	126	104.0	103.17	120	73.7	53	6.4	12.7	1.6
80	3.250	150	115.0	114.30	131	93.7	73	6.4	12.7	1.6
85	3.500	156	121.5	120.65	137	93.7	73	6.4	12.7	1.6
90	3.750	163	128.0	127.00	144	93.7	73	6.4	12.7	1.6
95	-	163	128.0	127.00	144	93.7	73	6.4	12.7	1.6
100	4.000	169	137.5	136.53	153	93.7	73	6.4	12.7	1.6

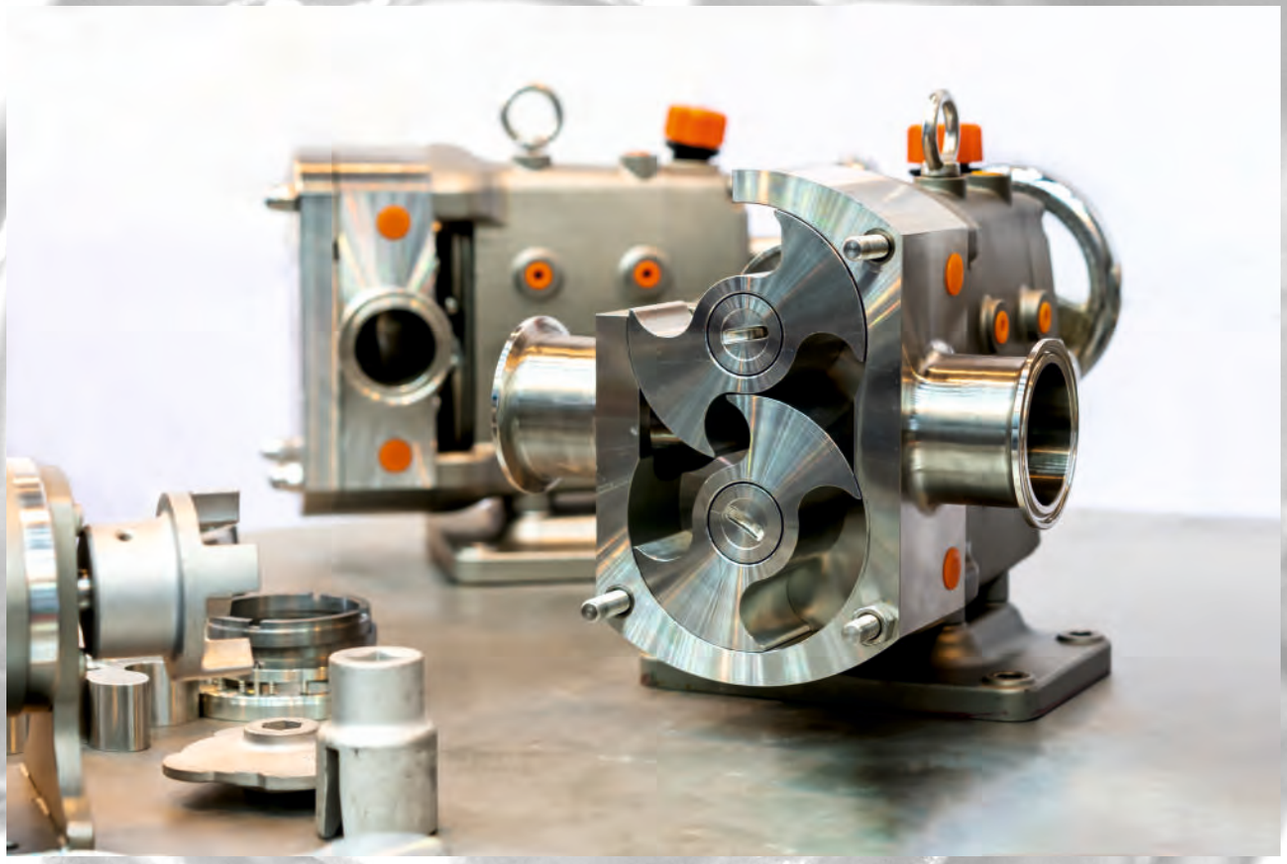

Robust single seal
Shaft protecting
Easy mounting
Independent of rotation

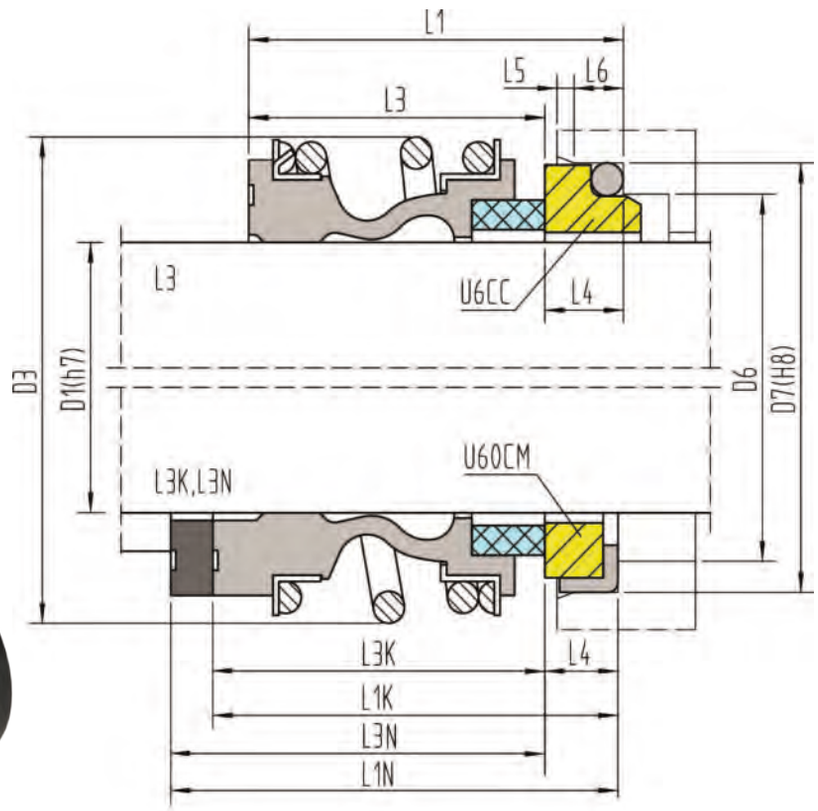

Materials:
Rotary: A, B, Q, U
Stationary: Q, U, V
Rubber parts: P, E, V, K, M

Operating limits:
(look at working conditions page 112)

p≤	12 bar
t=	-20 ÷ 120°C
v≤	10 m/s

EN 12756 (DIN 24960) **U6CC U60CM**

D1	D6	D7	D3	L1	L3	L1K	L3K	L1N	L3N	L4	L6	L5
10	17	21	22.5	21.1	14.5	32.5	25.9	40	33.4	6.6	4	1.5
12	19	23	25	21.6	15	32.5	25.9	40	33.4	6.6	4	1.5
14	21	25	28.5	23.6	17	35	28.4	40	33.4	6.6	4	1.5
15	23	27	28.5	23.6	17	—	—	—	—	6.6	—	—
16	23	27	28.5	23.6	17	35	28.4	40	33.4	6.6	4	1.5
18	27	33	32	27	19.5	37.5	30	45	37.5	7.5	5	2
20	29	35	37	29	21.5	37.5	30	45	37.5	7.5	5	2
22	31	37	37	29	21.5	37.5	30	45	37.5	7.5	5	2
24	33	39	42.5	30	22.5	40	32.5	50	42.5	7.5	5	2
25	34	40	42.5	30.5	23	40	32.5	50	42.5	7.5	5	2
28	37	43	49	34	26.5	42.5	35	50	42.5	7.5	5	2
30	39	45	49	34	26.5	42.5	35	50	42.5	7.5	5	2
32	42	48	53.5	35	27.5	42.5	35	55	47.5	7.5	5	2
33	42	48	53.5	35	27.5	42.5	35	55	47.5	7.5	5	2
35	44	50	57	36	28.5	42.5	35	55	47.5	7.5	5	2
38	49	56	59	39	30	45	36	55	46	9	6	2
40	51	58	62	39	30	45	36	55	46	9	6	2
43	54	61	65.5	39	30	45	36	60	51	9	6	2
45	56	63	68	39	30	45	36	60	51	9	6	2
48	59	66	70.5	39.5	30.5	45	36	60	51	9	6	2
50	62	70	74	40	30.5	47.5	38	60	50.5	9.5	6	2.5
53	65	73	78.5	44	33	47.5	36.5	70	59	11	6	2.5
55	67	75	81	46	35	47.5	36.5	70	59	11	6	2.5
58	70	78	85.5	48	37	52.5	41.5	70	59	11	6	2.5
60	72	80	88.5	49	38	52.5	41.5	70	59	11	6	2.5
63	75	83	92.5	51	40	52.5	41.5	70	59	11	6	2.5
65	77	85	93.5	51	40	52.5	41.5	80	69	11	6	2.5
68	81	90	96.5	51.3	40	52.5	41.2	80	68.7	11.3	7	2.5
70	83	92	99.5	51.3	40	60	48.7	80	68.7	11.3	7	2.5
75	88	97	107	51.3	40	60	48.7	80	68.7	11.3	7	2.5
80	95	105	112	52	40	60	48	90	78	12	7	3
85	100	110	120	55	41	60	46	90	76	14	7	3
90	105	115	127	59	45	65	51	90	76	14	7	3
95	110	120	132	60	46	65	51	90	76	14	7	3
100	115	125	137	61	47	65	51	90	76	14	7	3

Robust single seal
Shaft protecting
Easy mounting
Independent of rotation

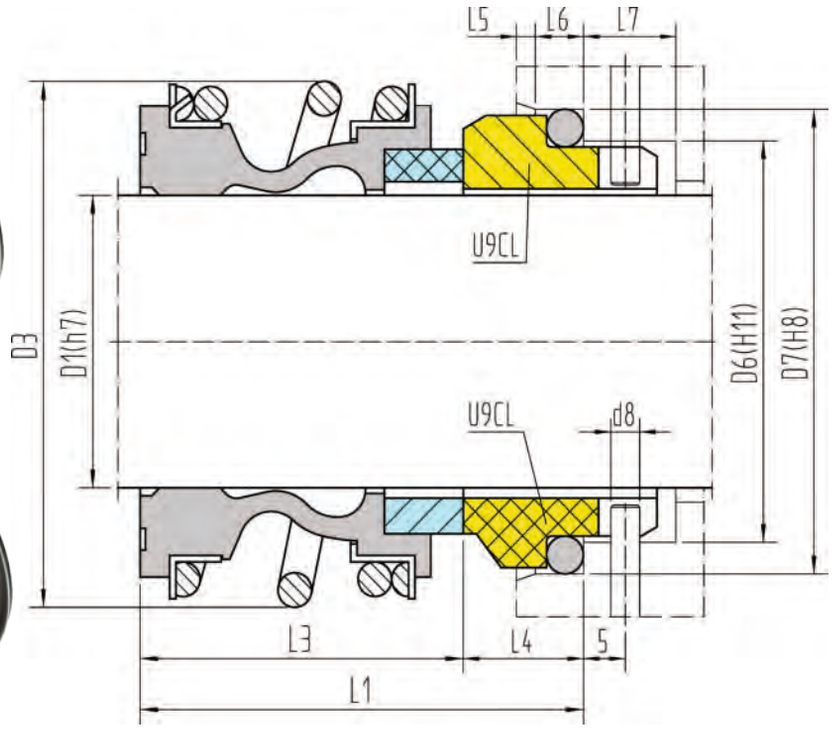

Materials:
Rotary: A, B, Q, U
Stationary: A, B, Q, U, V
Rubber parts: P, E, V

Operating limits:
(look at working conditions page 112)

p⩽	12 bar
t=	-20 ÷ 120°C
v⩽	10 m/s

EN 12756 (DIN 24960) **U9CL**

D1	D6	D7	D3	L1	L3	L4	L6	L5	L7
10	17	21	22.5	24.5	14.5	10	4	1.5	8.5
12	19	23	25	25	15	10	4	1.5	8.5
14	21	25	28.5	27	17	10	4	1.5	8.5
16	23	27	28.5	27	17	10	4	1.5	8.5
18	27	33	32	31	19.5	11.5	5	2	9
20	29	35	37	33	21.5	11.5	5	2	9
22	31	37	37	33	21.5	11.5	5	2	9
24	33	39	42.5	34	22.5	11.5	5	2	9
25	34	40	42.5	34.5	23	11.5	5	2	9
28	37	43	49	38	26.5	11.5	5	2	9
30	39	45	49	38	26.5	11.5	5	2	9
32	42	48	53.5	39	27.5	11.5	5	2	9
33	42	48	53.5	39	27.5	11.5	5	2	9
35	44	50	57	40	28.5	11.5	5	2	9
38	49	56	59	44	30	14	6	2	9
40	51	58	62	44	30	14	6	2	9
43	54	61	65.5	44	30	14	6	2	9
45	56	63	68	44	30	14	6	2	9
48	59	66	70.5	44.5	30.5	14	6	2	9
50	62	70	74	45.5	30.5	15	6	2.5	9
53	65	73	78.5	48	33	15	6	2.5	9
55	67	75	81	50	35	15	6	2.5	9
58	70	78	85.5	52	37	15	6	2.5	9
60	72	80	88.5	53	38	15	6	2.5	9
63	75	83	92.5	55	40	15	6	2.5	9
65	77	85	93.5	55	40	15	6	2.5	9
68	81	90	96.5	58	40	18	7	2.5	9
70	83	92	99.5	58	40	18	7	2.5	9
75	88	97	107	58	40	18	7	2.5	9
80	95	105	112	58.2	40	18.2	7	3	9
85	100	110	120	59.2	41	18.2	7	3	9
90	105	115	127	63.2	45	18.2	7	3	9
95	110	120	132	63.2	46	17.2	7	3	9
100	115	125	137	64.2	47	17.2	7	3	9

Robust single seal or
Economic allround seal
Shaft protecting
Independent of rotation

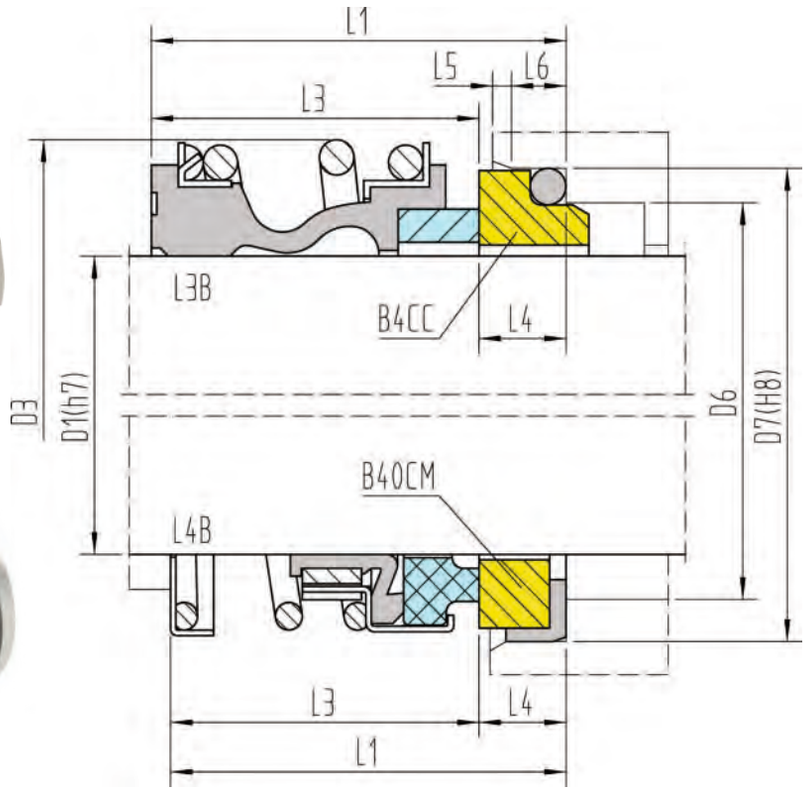

Materials:
Rotary: A, B, Q, U
Stationary: Q, U, V
Rubber parts: P, E, V

Operating limits:
(look at working conditions page 112)

p⩽	12 bar
t=	-20 ÷ 120°C
v⩽	10 m/s

Special fitting dimensions								B4CC B40CM	L4B B4CC B40CM		
D1	D6	D7	D3	L1	L3	L4	L6	L5	L1	L3	L4
10	15.5	19.2	22.5	21.1	14.5	6.6	3.8	1.2	22.6	16	6.6
12	17.5	21.6	25	20.6	15	5.6	3.8	1.2	23.1	17.5	5.6
14	20.5	24.6	28.5	22.6	17	5.6	3.8	1.2	23.1	17.5	5.6
15	20.5	24.6	28.5	23.6	17	6.6	3.8	1.2	24.1	17.5	6.6
16	22	28	28.5	24.5	17	7.5	5	1.5	26.5	19	7.5
18	24	30	32	27.5	19.5	8	5	1.5	28.5	20.5	8
19	29.5	35	37	29	21.5	7.5	5	1.5	29.5	22	7.5
20	29.5	35	37	29	21.5	7.5	5	1.5	29.5	22	7.5
22	29.5	35	37	29	21.5	7.5	5	1.5	31	23.5	7.5
24	32	38	42.5	30	22.5	7.5	5	1.5	32.5	25	7.5
25	32	38	42.5	30.5	23	7.5	5	1.5	34	26.5	7.5
28	36	42	49	35.5	26.5	9	5	1.5	35.5	26.5	9
30	39.2	45	49	37	26.5	10.5	5	1.5	35.5	25	10.5
32	42.2	48	53.5	38	27.5	10.5	5	1.5	39	28.5	10.5
33	44.5	50	53.5	38.5	27.5	11	5	1.5	39.5	28.5	11
35	46.2	52	57	39.5	28.5	11	5	1.5	39.5	28.5	11
38	49.2	55	59	40.3	30	10.3	5	1.5	42.5	32.2	10.3
40	52.2	58	62	40.8	30	10.8	5	1.5	45.5	34.7	10.8
43	53.3	62	65.5	42	30	12	6	2	49.3	37.3	12
45	55.3	64	68	41.6	30	11.6	6	2	50.8	39.2	11.6
48	59.7	68.4	70.5	42.1	30.5	11.6	6	2	56.3	44.7	11.6
50	60.8	69.3	74	42.1	30.5	11.6	6	2	57.3	45.7	11.6
53	63.8	72.3	78.5	45.3	33	12.3	6	2	60.3	48	12.3
55	66.5	75.4	81	48.3	35	13.3	6	2	62.3	49	13.3
58	69.5	78.4	85.5	50.3	37	13.3	6	2	65.3	52	13.3
60	71.5	80.4	88.5	51.3	38	13.3	6	2	66.3	53	13.3
63	74.5	83.4	92.5	53.3	40	13.3	6	2	-	-	13.3
65	76.5	85.4	93.5	53	40	13	6	2	67.3	54.3	13
68	82.7	91.5	96.5	53.7	40	13.7	6	2	69	55.3	13.7
70	83	92	99.5	53	40	13	6	2	69.3	56.3	13
75	90.2	99	107	54	40	14	6	2	70.3	56.3	14
80	95.2	104	112	55	40	15	6	2	74.3	59.3	15
85	100.2	109	120	55.8	41	14.8	6	2	-	-	-
90	105.2	114	127	59.8	45	14.8	6	2	-	-	-
95	111.6	120.3	132	61.8	46	15.8	6	2	-	-	-
100	114.5	123.3	137	62.8	47	15.8	6	2	-	-	-

Robust single seal
Shaft protecting
Easy mounting
Independent of rotation

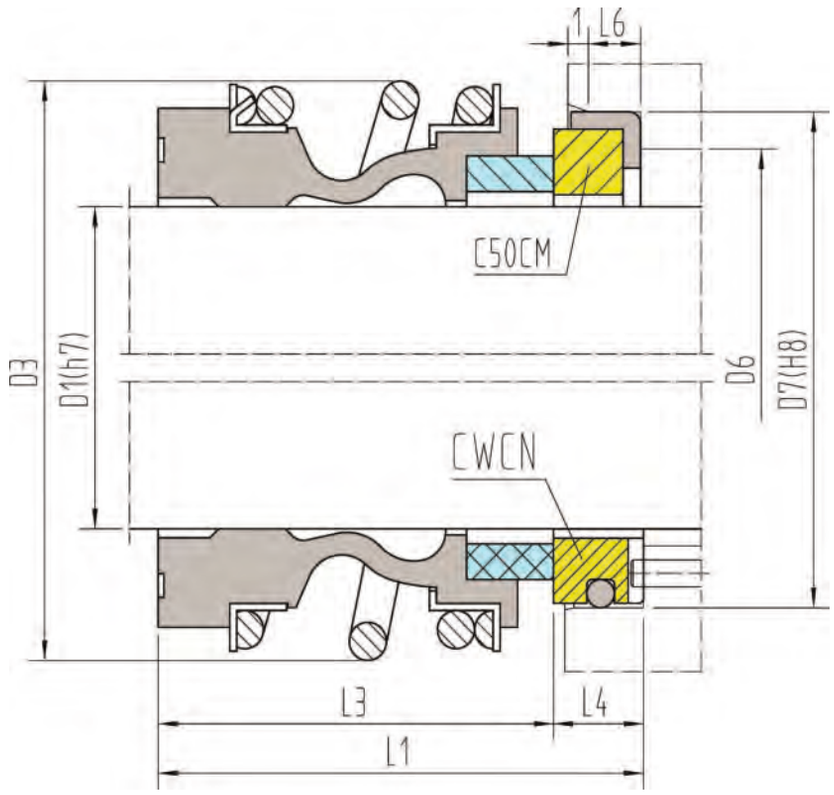

Materials:
Rotary: A, B, Q, U
Stationary: Q, U, V
Rubber parts: P, E, V

Operating limits:
(look at working conditions page 112)

p⩽	12 bar
t=	-20 ÷ 120°C
v⩽	10 m/s

European standards							C50CM	CWCN
D1	**D1 Zoll**	**D6**	**D7**	**D3**	**L1**	**L3**	**L4**	**L6**
10	0,375	11	24.6	22.5	34	25	9	7.5
12	0,500	13.5	27.8	25	34	25	9	7.5
14	-	17	30.95	28.5	35.5	25	10.5	9
15	-	17	30.95	28.5	35.5	25	10.5	9
16	0,625	17	30.95	28.5	35.5	25	10.5	9
18	0,750	20	34.15	32	35.5	25	10.5	9
20	-	21.5	35.7	37	35.5	25	10.5	9
22	0,875	23	37.3	37	35.5	25	10.5	9
24	-	26.5	40.5	42.5	35.5	25	10.5	9
25	1,000	26.5	40.5	42.5	35.5	25	10.5	9
28	1,125	29.5	47.65	49	45	33	12	10.5
30	-	32.5	50.8	49	45	33	12	10.5
32	1,250	32.5	50.8	53.5	45	33	12	10.5
33	-	36.5	54	53.5	45	33	12	10.5
35	1,375	36.5	54	57	45	33	12	10.5
38	1,500	39.5	57.15	59	45	33	12	10.5
40	1,625	42.5	60.35	62	45	33	12	10.5
42	-	46	63.5	65.5	53	41	12	10.5
43	1,750	46	63.5	65.5	53	41	12	10.5
45	-	46	63.5	68	53	41	12	10.5
48	1,875	49	66.7	70.5	53	41	12	10.5
50	2,000	52	69.85	74	54.5	41	13.5	12
53	2,125	55.5	73.05	78.5	54.5	41	13.5	12
55	2,250	58.5	76.2	81	54.5	41	13.5	12
58	-	61.5	79.4	85.5	54.5	41	13.5	12
60	2,375	61.5	79.4	88.5	54.5	41	13.5	12
	2,500	65	82.55	92.5	54.5	41	13.5	12
65	2,625	68	92.1	93.5	65	49	16	14.5
68	-	71	95.25	96.5	65	49	16	14.5
70	2,750	71	95.25	99.5	65	49	16	14.5
	2,875	74.5	98.45	-	68	52	16	14.5
75	3,000	77.5	101.6	107	68	52	16	14.5
	3,125	80.5	111.15	-	76	56	20	14.5
80	3,250	84	114.3	112	76	56	20	18.5
85	3,375	87	117.5	120	76	56	20	18.5
	3,500	90.5	120.65	-	76	56	20	18.5
90	3,625	93.5	123.85	127	79	59	20	18.5
95	3,750	96.5	127	132	79	59	20	18.5
	3,875	100	130.2		82	62	20	18.5
100	4,000	103	133.35	137	82	62	20	18.5

Robust single seal
Shaft protecting
Easy mounting
Torque transmission over claw system
Independent of rotation

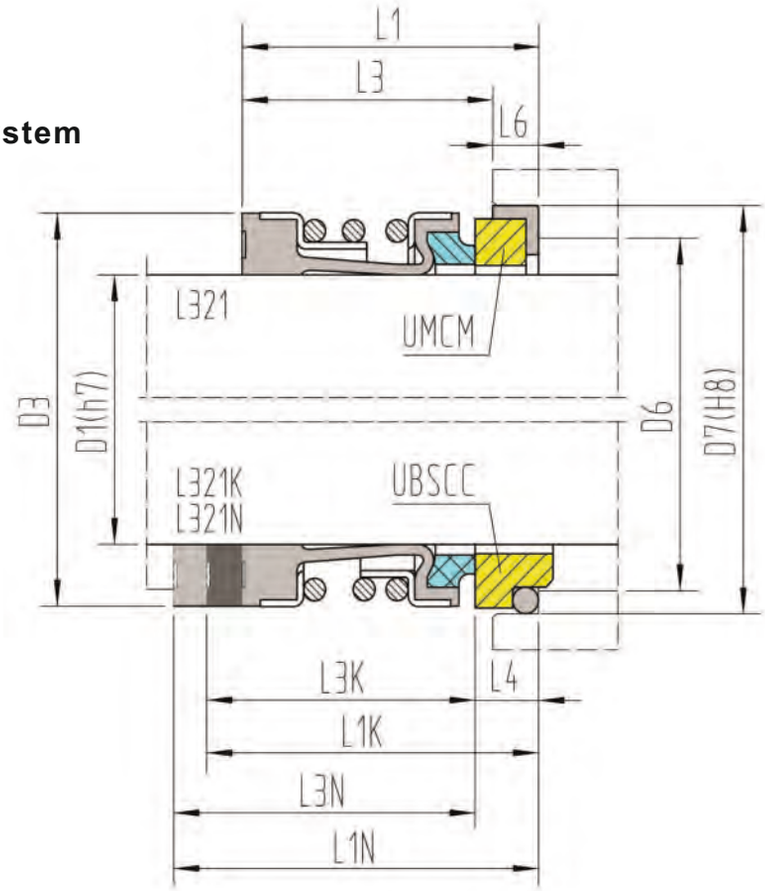

Materials:
Rotary: A, B, Q
Stationary: Q, V
Rubber parts: P, E, V

Operating limits:
(look at working conditions page 112)

p⩽	12 bar
t=	-20 ÷ 120°C
v⩽	10m/s

EN 12756 (DIN 24960) **UBSCC UMCM**

D1	D6	D7	D3	L1	L3	L1K	L3K	L1N	L3N	L4	L6
10	17	21	20	20	15	32.5	27.5	40	35	5	4
12	19	23	22	21	15	32.5	26.5	40	34	6	4
14	21	25	24	21	15	35	29	40	34	6	4
15	23	27	25	21	15	—	—	—	—	6	4
16	23	27	26	21	15	35	29	40	34	6	4
18	27	33	32	26	20	37.5	31.5	45	39	6	5
20	29	35	34	26	20	37.5	31.5	45	39	6	5
22	31	37	36	26	20	37.5	31.5	45	39	6	5
24	33	39	38	26	20	40	34	50	44	6	5
25	34	40	39	26	20	40	34	50	44	6	5
28	37	43	42	32	26	42.5	36.5	50	44	6	5
30	39	45	44	33	26	42.5	35.5	50	43	7	5
32	42	48	46	33	26	42.5	35.5	55	48	7	5
33	42	48	47	33	26	42.5	35.5	55	48	7	5
35	44	50	49	34	26	42.5	34.5	55	47	8	5
38	49	56	54	38	30	45	37	55	47	8	6
40	51	58	56	38	30	45	37	55	47	8	6
43	54	61	59	38	30	45	37	60	52	8	6
45	56	63	61	38	30	45	37	60	52	8	6
48	59	66	64	40	30	45	35	60	50	10	6
50	62	70	66	40	30	47.5	37.5	60	50	10	6
53	65	73	69	40	30	47.5	37.5	70	60	10	6
55	67	75	71	40	30	47.5	37.5	70	60	10	6
58	70	78	78	43	33	52.5	42.5	70	60	10	6
60	72	80	80	45	33	52.5	40.5	70	58	12	6
63	75	83	83	45	33	52.5	40.5	70	58	12	6
65	77	85	85	45	33	52.5	40.5	80	68	12	6
68	81	90	88	45	33	52.5	40.5	80	68	12	7
70	83	92	90	45	33	60	48	80	68	12	7
75	88	97	99	52	40	60	48	80	68	12	7
80	95	105	104	52.5	40	60	47.5	90	77.5	12.5	7
85	100	110	109	52.5	40	60	47.5	90	77.5	12.5	7
90	105	115	114	52.5	40	65	52.5	90	77.5	12.5	7
95	110	120	119	52.5	40	65	52.5	90	77.5	12.5	7
100	115	125	124	52.5	40	65	52.5	90	77.5	12.5	7

L352K

Robust single seal
Shaft protecting
Massive frame
Torque transmission over frame
Independent of rotation

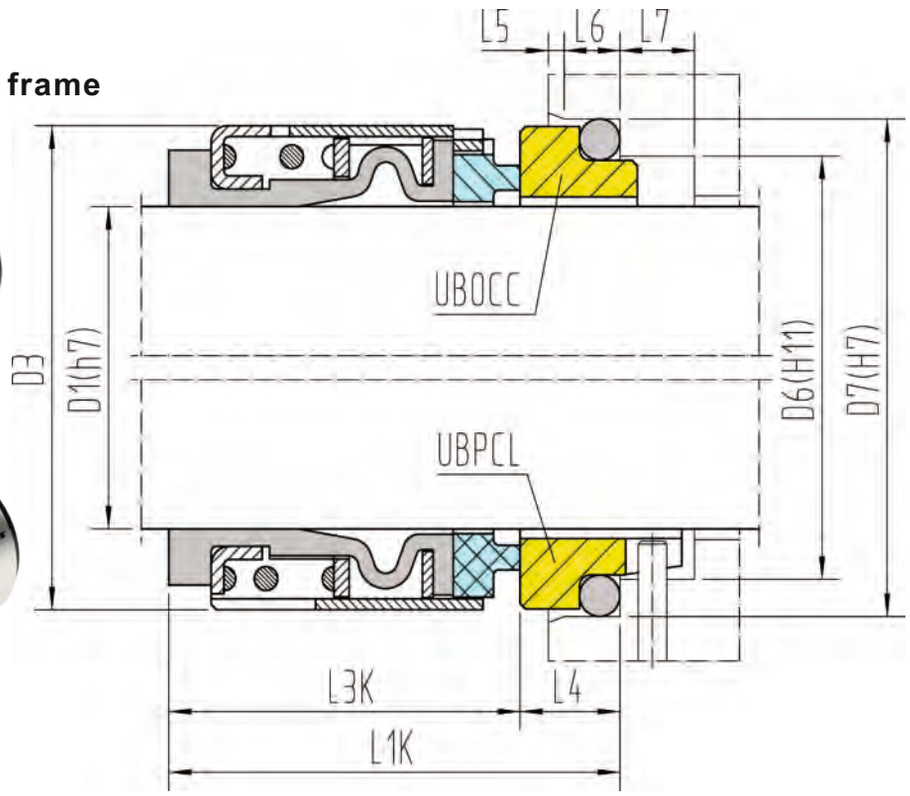

Materials:
Rotary: A, B, Q
Stationary: Q, U, V
Rubber parts: P, E, V

Operating limits:
(look at working conditions page 112)

p⩽	12 bar
t=	-20 ÷ 120°C
v⩽	10 m/s

EN 12756 (DIN 24960)								UBOCC	UBPCL
D1	**D6**	**D7**	**D3**	**L1K**	**L3K**	**L4**	**L7**	**L6**	**L5**
14	21	25	24	35	23	12	8.5	4	1.5
16	23	27	26	35	23	12	8.5	4	1.5
18	27	33	32	37.5	24	13.5	9	5	2
20	29	35	34	37.5	24	13.5	9	5	2
22	31	37	36	37.5	24	13.5	9	5	2
24	33	39	38	40	26.5	13.5	9	5	2
25	34	40	39	40	27	13	9	5	2
28	37	43	42	42.5	30	12.5	9	5	2
30	39	45	44	42.5	30.5	12	9	5	2
32	42	48	46	42.5	30.5	12	9	5	2
33	42	48	47	42.5	30.5	12	9	5	2
35	44	50	49	42.5	30.5	12	9	5	2
38	49	56	54	45	32	13	9	6	2
40	51	58	56	45	32	13	9	6	2
43	54	61	59	45	32	13	9	6	2
45	56	63	61	45	32	13	9	6	2
48	59	66	64	45	32	13	9	6	2
50	62	70	66	47.5	34	13.5	9	6	2.5
53	65	73	69	47.5	34	13.5	9	6	2.5
55	67	75	71	47.5	34	13.5	9	6	2.5
58	70	78	78	52.5	39	13.5	9	6	2.5
60	72	80	80	52.5	39	13.5	9	6	2.5
63	75	83	83	52.5	39	13.5	9	6	2.5
65	77	85	85	52.5	39	13.5	9	6	2.5
68	81	90	88	52.5	39	13.5	9	7	2.5
70	83	92	89	60	45.5	14.5	9	7	2.5
75	88	97	96	60	45.5	14.5	9	7	2.5
80	95	105	104	60	45	15	9	7	3
85	100	110	108	60	45	15	9	7	3
90	105	115	114	65	50	15	9	7	3
95	110	120	118	65	50	15	9	7	3
100	115	125	124	65	50	15	9	7	3

Special allround seal
Shaft protecting
Independent of rotation

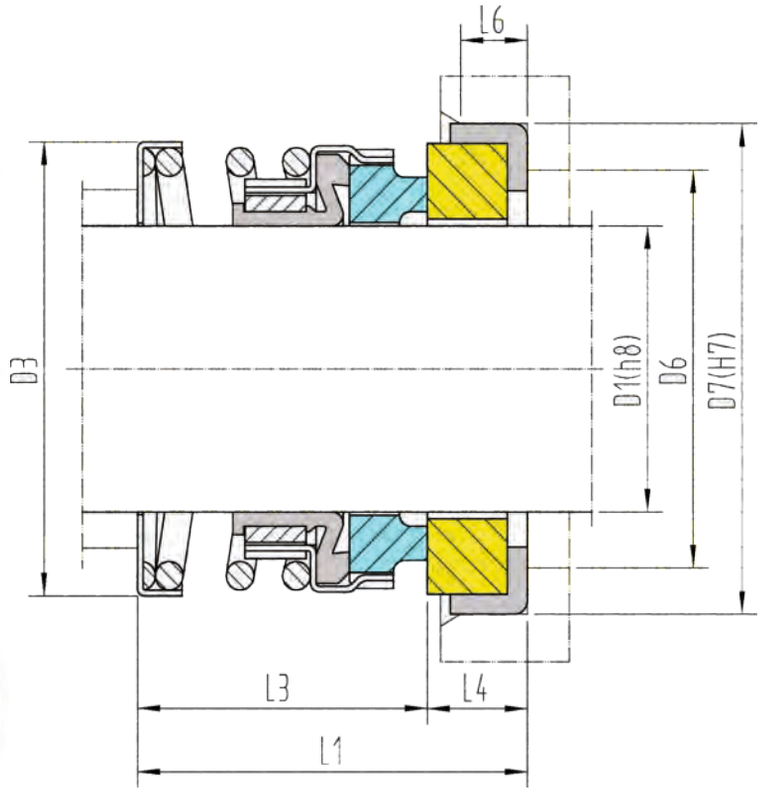

Materials:
Rotary: A, B, Q, U
Stationary: Q, U, V
Rubber parts: P, E, V

Operating limits:
(look at working conditions page 112)

p≤	12 bar
t=	-20 ÷ 120°C
v≤	10 m/s

Special fitting dimensions

D1	D3	D6	D7	L1	L3	L4	L6
8	18	13	21	18	13	5	7
9	21	16	24	23	16.5	6.5	7
10	21	16	24	23	16.5	6.5	7
11	22	16	24	23	16.5	6.5	7
12	22	17	26	24	17.5	6.5	7
13	25	17	26	24	17.5	6.5	7
14	25	21	28	25	18.5	6.5	7
15	27	21	28	25	18.5	6.5	7
16	27	22	32	27	20	7	8
17	31	22	32	27	20	7	8
18	31	25	35	26	18.5	7.5	8
19	32	25	35	26	18.5	7.5	8
20	32	27	38	28	20	8	8
22	34	29	40	28	19.5	8.5	8
25	39	32	44	29	20.5	8.5	9
28	43	34	46	30	21.5	8.5	9
30	44	38	50	31	21.5	9.5	9
32	46	40	54	33	23.5	9.5	9
35	50	44	58	36	25.5	10.5	10
38	53	46	60	37	26.5	10.5	10
40	56	48	64	38	27	11	10
45	62	52	66	40	29	11	10
50	68	58	72	42	31	11	10

Economic allround seal
Shaft protecting
Independent of rotation

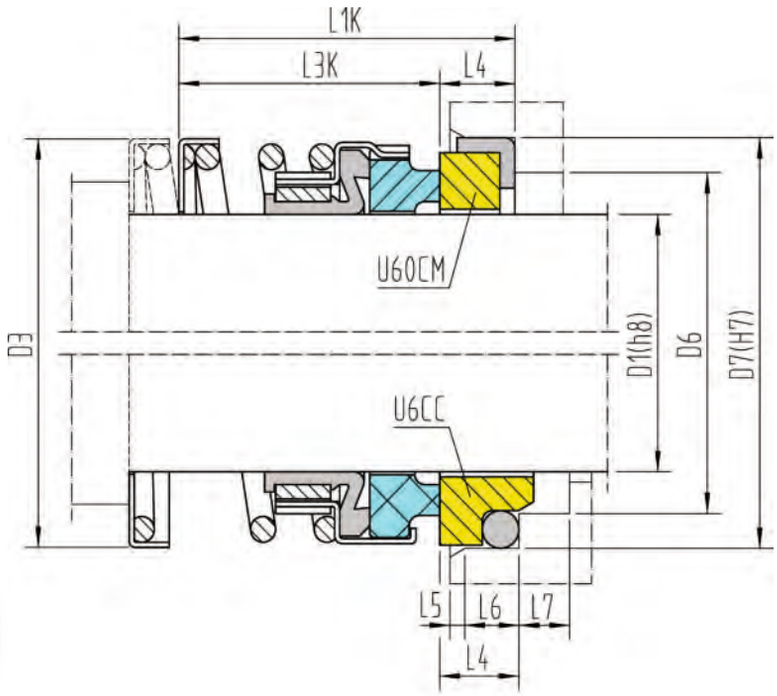

Materials:
Rotary: A, B, Q, U
Stationary: Q, U, V
Rubber parts: P, E, V

Operating limits:
(look at working conditions page 112)

p⩽	12 bar
t=	-20 ÷ 120°C
v⩽	10 m/s

EN 12756 (DIN 24960)									U60CM U6CC
D1	**D6**	**D7**	**D3**	**L1K**	**L3K**	**L4**	**L6**	**L5**	**L7**
10	17	21	21	32.5	25.9	6.6	4	1.5	8.5
12	19	23	22	32.5	25.9	6.6	4	1.5	8.5
14	21	25	25	35	28.4	6.6	4	1.5	8.5
16	23	27	27	35	28.4	6.6	4	1.5	8.5
18	27	33	31	37.5	30	7.5	5	2	9
20	29	35	32	37.5	30	7.5	5	2	9
22	31	37	34	37.5	30	7.5	5	2	9
24	33	39	39	40	32.5	7.5	5	2	9
25	34	40	39	40	32.5	7.5	5	2	9
28	37	43	43	42.5	35	7.5	5	2	9
30	39	45	44	42.5	35	7.5	5	2	9
32	42	48	46	42.5	35	7.5	5	2	9
33	42	48	47	42.5	35	7.5	5	2	9
35	44	50	50	42.5	35	7.5	5	2	9
38	49	56	53	45	36	9	6	2	9
40	51	58	56	45	36	9	6	2	9
43	54	61	59	45	36	9	6	2	9
45	56	63	62	45	36	9	6	2	9
48	59	66	65	45	36	9	6	2	9
50	62	70	68	47.5	38	9.5	6	2	9
53	65	73	71	47.5	36.5	11	6	2	9
55	67	75	72	47.5	36.5	11	6	2	9
58	70	78	79	52.5	41.5	11	6	2	9
60	72	80	79	52.5	41.5	11	6	2	9
63	75	83	82	52.5	41.5	11	6	2	9
65	77	85	85	52.5	41.5	11	6	2	9
68	81	90	90	52.5	41.2	11.3	7	2	9
70	83	92	90	60	48.7	11.3	7	2	9
75	88	97	97	60	48.7	11.3	7	2	9
80	95	105	104	60	48	12	7	2	9
85	100	110	108	60	46	14	7	2	9
90	105	115	112	65	51	14	7	2	9
95	110	120	120	65	51	14	7	2	9
100	115	125	124	65	51	14	7	2	9

Economic allround seal
Shaft protecting
Independent of rotation

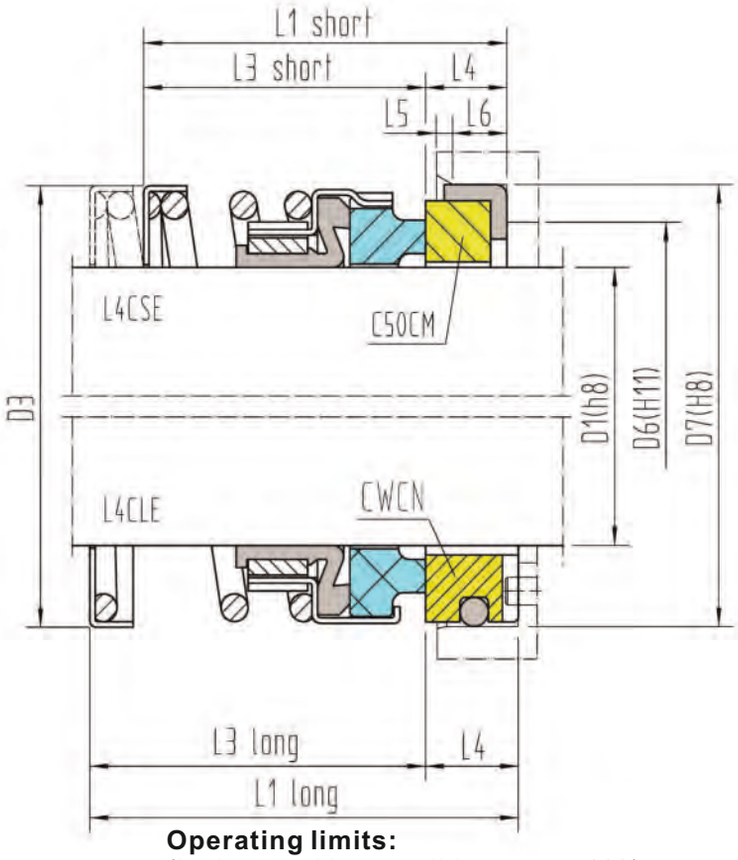

Materials:
Rotary: A, B, Q, U
Stationary: Q, U, V
Rubber parts: P, E, V

Operating limits:
(look at working conditions page 112)

p⩽	12 bar
t=	-20 ÷ 120°C
v⩽	10 m/s

European standards

C50CM CWCN

D1	D1 Zoll	D6	D7	D3	L1 short	L3 short	L1 long	L3 long	L4	L6
10	0,375	11	24.6	21	34	25	53	44	9	7.5
12	0,500	13.5	27.8	22	34	25	53	44	9	7.5
14	-	17	30.95	25	35.5	25	54.5	44	10.5	9
15	-	17	30.95	25	35.5	25	54.5	44	10.5	9
16	0,625	17	30.95	27	35.5	25	54.5	44	10.5	9
18	0,750	20	34.15	31	35.5	25	54.5	44	10.5	9
20	-	21.5	35.7	32	35.5	25	54.5	44	10.5	9
22	0,875	23	37.3	34	35.5	25	54.5	44	10.5	9
24	-	26.5	40.5	39	35.5	25	54.5	44	10.5	9
25	1,000	26.5	40.5	39	35.5	25	54.5	44	10.5	9
28	1,125	29.5	47.65	43	45	33	72	60	12	10.5
30	-	32.5	50.8	44	45	33	72	60	12	10.5
32	1,250	32.5	50.8	46	45	33	72	60	12	10.5
33	-	36.5	54	47	45	33	72	60	12	10.5
35	1,375	36.5	54	50	45	33	72	60	12	10.5
38	1,500	39.5	57.15	53	45	33	72	60	12	10.5
40	1,625	42.5	60.35	56	45	33	72	60	12	10.5
42	-	46	63.5	61	53	41	83	71	12	10.5
43	1,750	46	63.5	61	53	41	83	71	12	10.5
45	-	46	63.5	62	53	41	83	71	12	10.5
48	1,875	49	66.7	65	53	41	83	71	12	10.5
50	2,000	52	69.85	68	54.5	41	84.5	71	13.5	12
53	2,125	55.5	73.05	71	54.5	41	84.5	71	13.5	12
55	2,250	58.5	76.2	72	54.5	41	84.5	71	13.5	12
58	-	61.5	79.4	79	54.5	41	84.5	71	13.5	12
60	2,375	61.5	79.4	79	54.5	41	84.5	71	13.5	12
	2,500	65	82.55	82	54.5	41	84.5	71	13.5	12
65	2,625	68	92.1	85	65	49	86	70	16	14.5
68	-	71	95.25	90	65	49	86	70	16	14.5
70	2,750	71	95.25	90	65	49	86	70	16	14.5
	2,875	74.5	98.45	-	68	52	89	73	16	14.5
75	3,000	77.5	101.6	97	68	52	89	73	16	14.5
	3,125	80.5	111.15	-	76	56	99	79	20	14.5
80	3,250	84	114.3	104	76	56	99	79	20	18.5
85	3,375	87	117.5	108	76	56	99	79	20	18.5
	3,500	90.5	120.65	-	76	56	99	79	20	18.5
90	3,625	93.5	123.85	112	79	59	103	83	20	18.5
95	3,750	96.5	127	120	79	59	103	83	20	18.5
	3,875	100	130.2	-	82	62	106	86	20	18.5
100	4,000	103	133.35	124	82	62	106	86	20	18.5

Economic allround seal
Shaft protecting
Independent of rotation

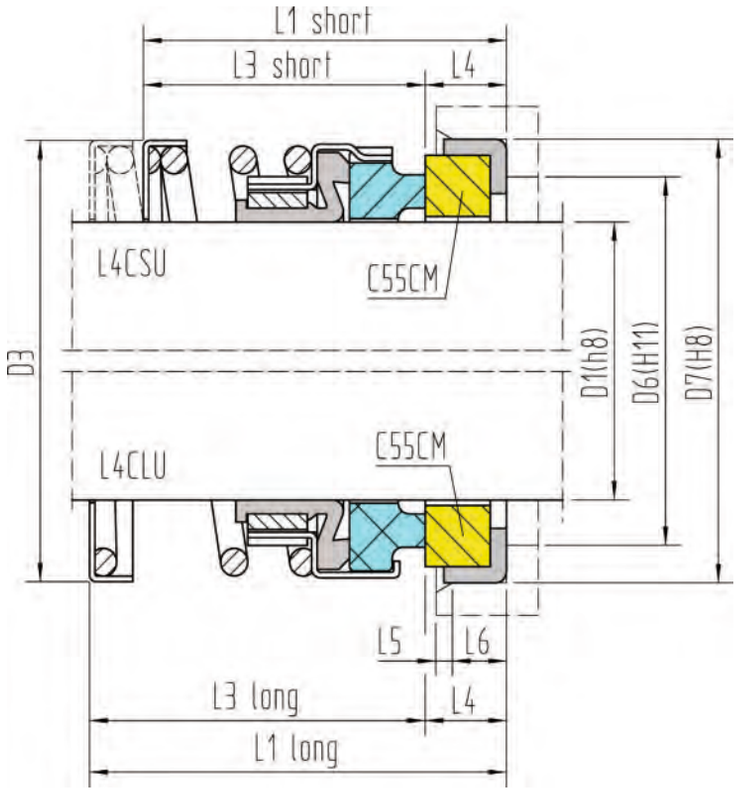

Materials:
Rotary: A, B, Q, U
Stationary: Q, U, V
Rubber parts: P, E, V

Operating limits:
(look at working conditions page 112)

p⩽	12 bar
t=	-20 ÷ 120°C
v⩽	10 m/s

US standards										C55CM
D1 Zoll	**D6**	**D7**	**D3**	**L1 short**	**L3 short**	**L1 long**	**L3 long**	**L4**	**L6**	**L5**
0,375	0.625	0.875	0.850	1,125	0.812	1,500	1,187	0.313	0.250	0.050
0,500	0.750	1,000	0.945	1,125	0.812	1,500	1,187	0.313	0.250	0.050
0,625	0.937	1,250	1.063	1,281	0.875	1,718	1,312	0.406	0.344	0.050
0,750	1.062	1.375	1.259	1,281	0.875	1,718	1,312	0.406	0.344	0.050
0,875	1.187	1,500	1.339	1,343	0.937	1,781	1,375	0.406	0.344	0.050
1,000	1.312	1.625	1.575	1,437	1,000	2,000	1,563	0.437	0.375	0.050
1,125	1.437	1,750	1.693	1,500	1,063	2,062	1,625	0.437	0.375	0.050
1,250	1.563	1.875	1.889	1,500	1,063	2,062	1,625	0.437	0.375	0.050
1,375	1.687	2,000	2.008	1,562	1,125	2,124	1,687	0.437	0.375	0.050
1,500	1.813	2.125	2.166	1,562	1,125	2,124	1,687	0.437	0.375	0.050
1,625	2,000	2.375	2.363	1,875	1,375	2,500	2,000	0.500	0.437	0.050
1,750	2.125	2,500	2.599	1,875	1,375	2,500	2,000	0.500	0.437	0.050
1,875	2,250	2.625	2.678	2,000	1,500	2,625	2,125	0.500	0.437	0.050
2,000	2.375	2,750	2.914	2,000	1,500	2,625	2,125	0.500	0.437	0.050
2,125	2.375	3,000	2.953	2,249	1,687	2,937	2,375	0.562	0.500	0.050
2,250	2.437	3.125	3.111	2,249	2,249	2,937	2,375	0.562	0.500	0.050
2,375	2.563	3,250	3.268	2,375	1,813	3,062	2,500	0.562	0.500	0.050
2,500	2.687	3.375	3.347	2,375	1,813	3,062	2,500	0.562	0.500	0.050
2,625	2.812	3.375	3.504	2,562	1,937	3,375	2,750	0.625	0.562	0.100
2,750	2.937	3,500	3.662	2,562	1,937	3,375	2,750	0.625	0.562	0.100
2,875	3.062	3,750	3.898	2,687	2,062	3,500	2,875	0.625	0.562	0.100
3,000	3.187	3.875	3.937	2,687	2,062	3,500	2,875	0.625	0.562	0.100
3,125	3.312	4,000	4.174	2,968	2,187	3,906	3,125	0.781	0.656	0.100
3,250	3.437	4.125	4.134	2,968	2,187	3,906	3,125	0.781	0.656	0.100
3,375	3.562	4,250	4.370	2,968	2,187	3,906	3,125	0.781	0.656	0.100
3,500	3.687	4.375	4.528	2,968	2,187	3,906	3,125	0.781	0.656	0.100
3,625	3.812	4,500	4.764	3,093	2,312	4,031	3,250	0.781	0.656	0.100
3,750	3.937	4.625	4.804	3,093	2,312	4,031	3,250	0.781	0.656	0.100
3,875	4.062	4,750	5.079	3,218	2,437	4,156	3,375	0.781	0.656	0.100
4,000	4.187	4.875	5.079	3,218	2,437	4,156	3,375	0.781	0.656	0.100

L41ACLE-L42CSE

Robust single seal
Shaft protecting
No torque on the bellow because of frame system
Independent of rotation

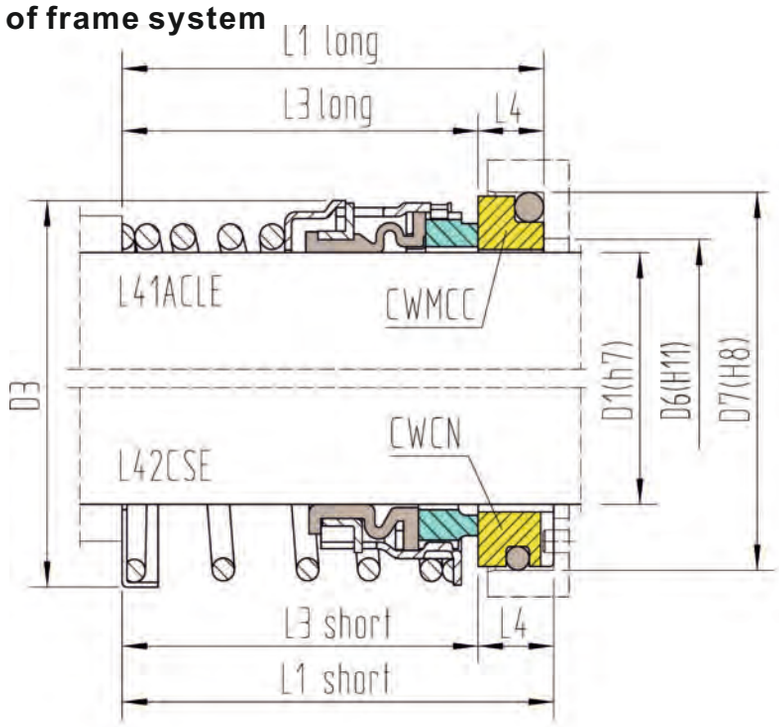

Materials:
Rotary: A, B, Q
Stationary: Q, V
Rubber parts: P, E, V

Operating limits:
(look at working conditions page 112)

p⩽	15bar
t=	-20 ÷ 120°C
v⩽	12 m/s

Elastomere bellows seals

European standards										CWMCC CWCN
D1	D1 Zoll	D6	D7	D3 L41A	L1 L41A	L3 L41A	D3 L42	L1 L42	L3 L42	L4
12	0,500	13.5	27.8	27	53	44	32	34	25	9
14	-	17	30.95	29	54.5	44	35	35.5	25	10.5
15	-	17	30.95	29	54.5	44	35	35.5	25	10.5
16	0,625	17	30.95	29	54.5	44	35	35.5	25	10.5
18	0,750	20	34.15	32	54.5	44	40	35.5	25	10.5
20	-	21.5	35.7	33	54.5	44	41	35.5	25	10.5
22	0,875	23	37.3	35	54.5	44	43	35.5	25	10.5
24	-	26.5	40.5	38	54.5	44	47	35.5	25	10.5
25	1,000	26.5	40.5	38	54.5	44	47	35.5	25	10.5
28	1,125	29.5	47.65	46	72	60	56	45	33	12
30	-	32.5	50.8	49	72	60	59	45	33	12
32	1,250	32.5	50.8	49	72	60	59	45	33	12
35	1,375	36.5	54	52	72	60	63	45	33	12
38	1,500	39.5	57.15	56	72	60	67	45	33	12
40	1,625	42.5	60.35	59	72	60	71	45	33	12
43	1,750	46	63.5	62	83	71	74	53	41	12
45	-	46	63.5	62	83	71	74	53	41	12
48	1,875	49	66.7	65	83	71	77	53	41	12
50	2,000	52	69.85	68	84.5	71	81	54.5	41	13.5
53	2,125	55.5	73.05	75	84.5	71	88	54.5	41	13.5
55	2,250	58.5	76.2	75	84.5	71	88	54.5	41	13.5
60	2,375	61.5	79.4	78	84.5	71	91	54.5	41	13.5
63	2,500	65	82.55	86	84.5	71	100	54.5	41	13.5
65	2,625	68	92.1	86	86	70	100	65	49	16
68	-	71	95.25	89	86	70	103	65	49	16
70	2,750	71	95.25	89	86	70	103	65	49	16
	2,875	74.5	98.45	92	89	73	108	68	52	16
75	3,000	77.5	101.6	95	89	73	111	68	52	16
	3,125	80.5	111.15	102	99	79	118	76	56	20
80	3,250	84	114.3	105	99	79	121	76	56	20
85	3,375	87	117.5	108	99	79	125	76	56	20
	3,500	90.5	120.65	111	99	79	128	76	56	20
90	3,625	93.5	123.85	114	103	83	131	79	59	20
95	3,750	96.5	127	118	103	83	134	79	59	20
	3,875	100	130.2	121	106	86	139	82	62	20
100	4,000	103	133.35	124	106	86	142	82	62	20

Robust single seal
Shaft protecting
No torque on the bellow because of frame system
Independent of rotation

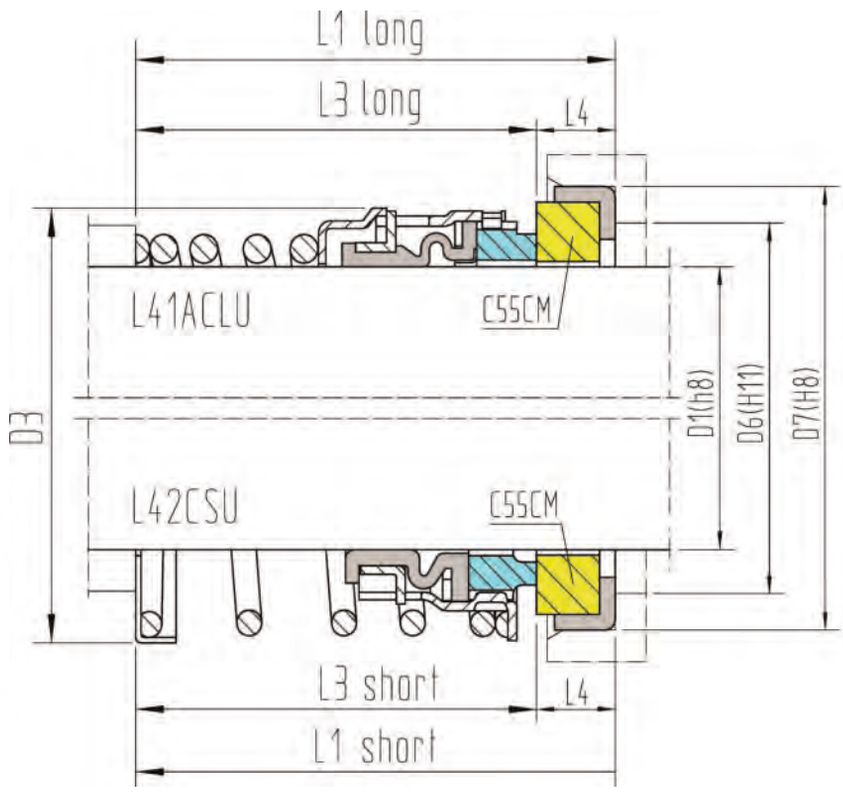

Materials:
Rotary: A, B, Q
Stationary: Q, V
Rubber parts: P, E, V

Operating limits:
(look at working conditions page 112)

p⩽	15 bar
t=	-20 ÷ 120°C
v⩽	12 m/s

US standards						C55CM			
D1 Zoll	**D6**	**D7**	**D3 L41A**	**L1 L41A**	**L3 L41A**	**D3 L42**	**L1 L42**	**L3 L42**	**L4**
0,375	0.625	0.875	0.878	1,500	1,187	1,125	1,125	0.812	0.313
0,500	0.750	1,000	1,043	1,500	1,187	2,600	1,125	0.812	0.313
0,625	0.937	1,250	1,161	1,718	1,312	1,782	1,281	0.875	0.406
0,750	1.062	1.375	1,299	1,718	1,312	1,578	1,281	0.875	0.406
0,875	1.187	1,500	1,634	1,781	1,375	1,700	1,343	0.937	0.406
1,000	1.312	1.625	1,500	2,000	1,563	1,850	1,437	1,000	0.437
1,125	1.437	1,750	1,890	2,062	1,625	2,250	1,500	1,063	0.437
1,250	1.563	1.875	2,067	2,062	1,625	2,350	1,500	1,063	0.437
1,375	1.687	2,000	2,244	2,124	1,687	2,500	1,562	1,125	0.437
1,500	1.813	2.125	2,382	2,124	1,687	2,640	1,562	1,125	0.437
1,625	2,000	2.375	2,413	2,500	2,000	2,795	1,875	1,375	0.500
1,750	2.125	2,500	2,500	2,500	2,000	2,925	1,875	1,375	0.500
1,875	2,250	2.625	2,795	2,625	2,125	3,032	2,000	1,500	0.500
2,000	2.375	2,750	2,700	2,625	2,125	3,250	2,000	1,500	0.500
2,125	2.375	3,000	2,878	2,937	2,375	3,350	2,249	1,687	0.562
2,250	2.437	3.125	3,000	2,937	2,375	3,500	2,249	2,249	0.562
2,375	2.563	3,250	3,123	3,062	2,500	3,600	2,375	1,813	0.562
2,500	2.687	3.375	3,250	3,062	2,500	3,700	2,375	1,813	0.562
2,625	2.812	3.375	3,390	3,375	2,750	3,950	2,562	1,937	0.625
2,750	2.937	3,500	3,500	3,375	2,750	4,125	2,562	1,937	0.625
2,875	3.062	3,750	3,675	3,500	2,875	4,250	2,687	2,062	0.625
3,000	3.187	3.875	3,740	3,500	2,875	4,370	2,687	2,062	0.625
3,125	3.312	4,000	4,025	3,906	3,125	4,750	2,968	2,187	0.781
3,250	3.437	4.125	4,156	3,906	3,125	4,760	2,968	2,187	0.781
3,375	3.562	4,250	4,251	3,906	3,125	5,000	2,968	2,187	0.781
3,500	3.687	4.375	4,375	3,906	3,125	5,125	2,968	2,187	0.781
3,625	3.812	4,500	4,500	4,031	3,250	5,250	3,093	2,312	0.781
3,750	3.937	4.625	4,625	4,031	3,250	5,275	3,093	2,312	0.781
3,875	4.062	4,750	4,782	4,156	3,375	5,480	3,218	2,437	0.781
4,000	4.187	4.875	4,875	4,156	3,375	5,600	3,218	2,437	0.781

Very simple mass-produced seal
Short fitting length
Low pressure range
Independent of rotation

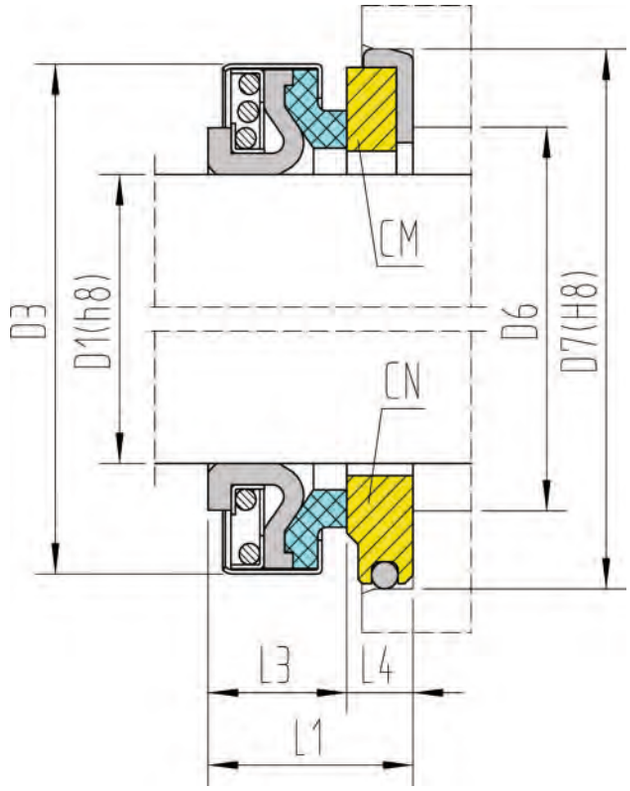

Materials:
Rotary: A, B, Q, U
Stationary: H,Q, U, V
Rubber parts: P, E, V

Operating limits:
(look at working conditions page 112)

p≤	5 bar
t=	-20 ÷ 100°C
v≤	10 m/s

Special fitting dimensions CM CN

D1	D3	D6	D7	L1	L3	L4
6	18	8	22	12	8	4
8	20/24	10	22/26	16.5	11	5.5
10	24	12	26	19	11	8
11	24	13	26	19	11	8
12	24	14	26	19/16,5	11	8/5,5
12	24	14	26	21/18,5	13	8/5,5
13	24	15	26	21	13	8
14	32	16	29,5/38	21	13	8
15	32/35	17	29,5/38	21	13	8
16	32/35	18	29,5/38	21	13	8
17	39	19	42	21	13	8
18	39	20	42	21	13	8
19	39	21	42	21	13	8
20	39/42	22	42/45	21/23	13	8/10.
22	42	24	45	23	13	10
23	47	25	50	24	14	10
24	47	26	50	24	14	10
25	42/47	27	50	24	14	10
28	54	31	57	25	15	10
30	54	33	57	25	15	10
32	54	35	57	25	15	10
35	60	38	63	26	16	10
38	65	41	68	30	18	12
40	65	43	68	30	18	12
45	70	48	73	32	20	12
50	85	53	88	38/39.5	23/24.5	15
55	85	53	88	39	24	15
60	105	65	110	45	30	15
65	105	70	110	45	30	15
70	105	75	110	47	32	15

L5EPR

Simple single seal
Short fitting length
Low pressure range
No torque on the bellow
Independent of rotation

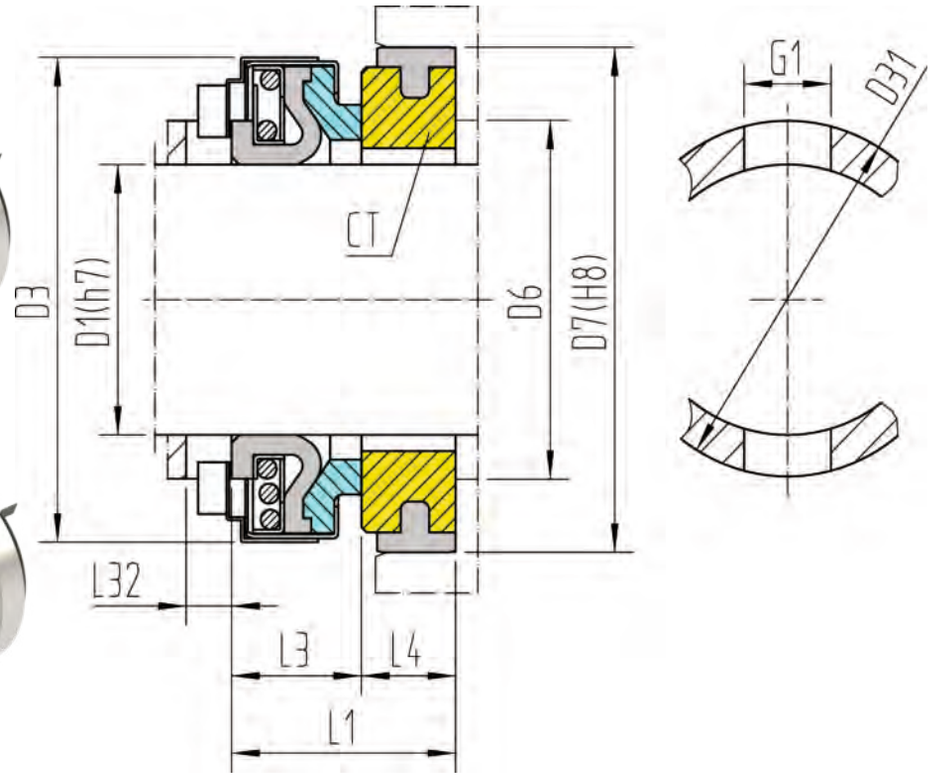

Materials:
Rotary: A, B, Q, U
Stationary: H, Q, U, V
Rubber parts: P, E, V

Operating limits:
(look at working conditions page 112)

p⩽	5 bar
t=	-20 ÷ 100°C
v⩽	10 m/s

Special fitting dimensions — **CT**

D1	D3	D6	D7	L32	L1	L3	L4	D31	G1
8	24	10	22/26	3.5	16.5	11	5.5	18	6
10	24	12	26	4	19.8	11.8	8	20	7.5
12	24	14	26	4	20,8/18,3	12.8	8/5,5	24	8
14	32	16	29,5/38	4	20.8	12.8	8	28	10
15	35	17	29,5/38	4	20.8	12.8	8	28	10
16	35	18	29,5/38	4	20.8	12.8	8	28	10
17	39	19	42	4	20.8	12.8	8	32	10
18	39	20	42	4	20.8	12.8	8	32	10
19	39	21	42	4	20.8	12.8	8	34	12
20	42	22	42/45	4	20,8/22,8	12.8	8/10.	34	12
22	42	24	45	4	22.8	12.8	10	34	12
23	47	25	50	6	23.5	13.5	10	40	12
24	47	26	50	6	23.5	13.5	10	40	12
25	47	27	50	6	23.5	13.5	10	40	12
28	54	31	57	6	25	15	10	45	12
30	54	33	57	6	25	15	10	45	12
32	54	35	57	6	25	15	10	47	12
35	60	38	63	7	26	16	10	52	12
38	65	41	68	9	30	18	12	53	14
40	65	43	68	9	30	18	12	53	14
45	70	48	73	9	32	20	12	58	14
50	85	53	88	11	39.5	24.5	15	68	16
55	85	53	88	11	39.5	24.5	15	68	16
60	105	65	110	12	45	30	15	87	20
65	105	70	110	13	45	30	15	87	20
70	105	75	110	13	45	30	15	90	20

Simple single seal
Conical spring rotating
Shaft protecting
Easy mounting
Independent of rotation

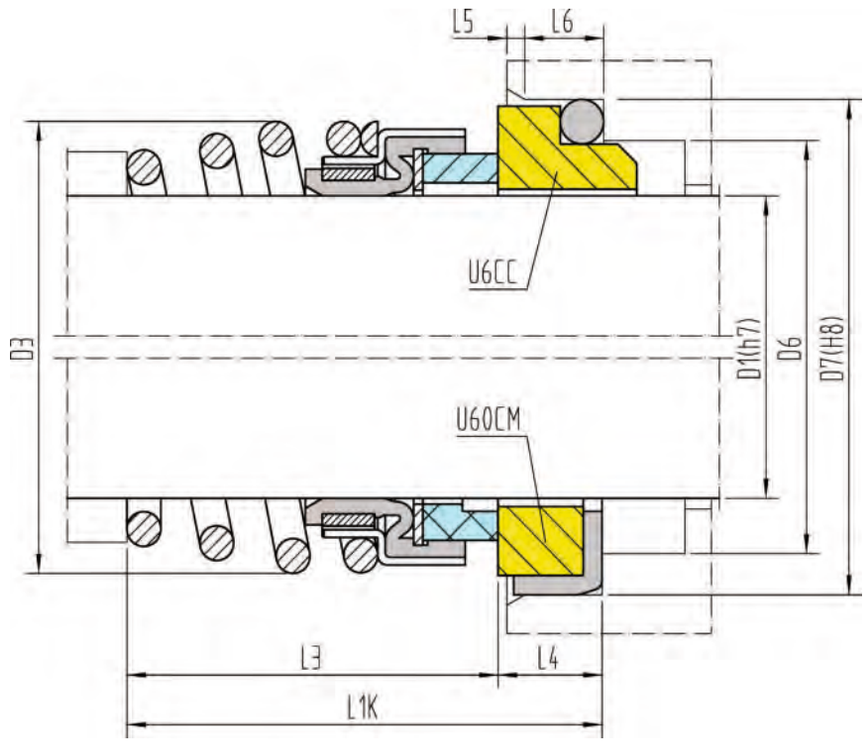

Materials:
Rotary: A, B, Q, U
Stationary: Q, U, V
Rubber parts: P, E, V

Operating limits:
(look at working conditions page 112)

p⩽	12 bar
t=	-20 ÷ 120°C
v⩽	10 m/s

EN 12756 (DIN 24960) **U6CC U60CM**

D1	D6	D7	D3	L1K	L3	L4	L6	L5
10	17	21	19.6	32.5	825.9	6.6	4	1.5
12	19	23	21.6	32.5	25.9	6.6	4	1.5
14	21	25	24	35	28.4	6.6	4	1.5
16	23	27	26.5	35	28.4	6.6	4	1.5
18	27	33	29	37.5	30	7.5	5	2
20	29	35	31.5	37.5	30	7.5	5	2
22	31	37	33	37.5	30	7.5	5	2
24	33	39	37	40	32.5	7.5	5	2
25	34	40	38	40	32.5	7.5	5	2
28	37	43	41	42.5	35	7.5	5	2
30	39	45	43	42.5	35	7.5	5	2
32	42	48	45	42.5	35	7.5	5	2
33	42	48	46	42.5	35	7.5	5	2
35	44	50	48	42.5	35	7.5	5	2
38	49	56	52.5	45	36	9	6	2
40	51	58	55.5	45	36	9	6	2
43	54	61	58.5	45	36	9	6	2
45	56	63	60.5	45	36	9	6	2
48	59	66	64	45	36	9	6	2
50	62	70	66	47.5	38	9.5	6	2.5
53	65	73	69	47.5	36.5	11	6	2.5
55	67	75	71	47.5	36.5	11	6	2.5
58	70	78	76	52.5	41.5	11	6	2.5
60	72	80	78	52.5	41.5	11	6	2.5
63	75	83	82	52.5	41.5	11	6	2.5
65	77	85	84	52.5	41.5	11	6	2.5
68	81	90	87	52.5	41.2	11.3	7	2.5
70	83	92	89	60	48.7	11.3	7	2.5
75	88	97	95	60	48.7	11.3	7	2.5
80	95	105	101.5	60	48	12	7	3
85	100	110	108	60	46	14	7	3
90	105	115	111.5	65	46	14	7	3
95	110	120	118	65	46	14	7	3
100	115	125	122.5	65	46	14	7	3

L71-L72

Large quantites seal

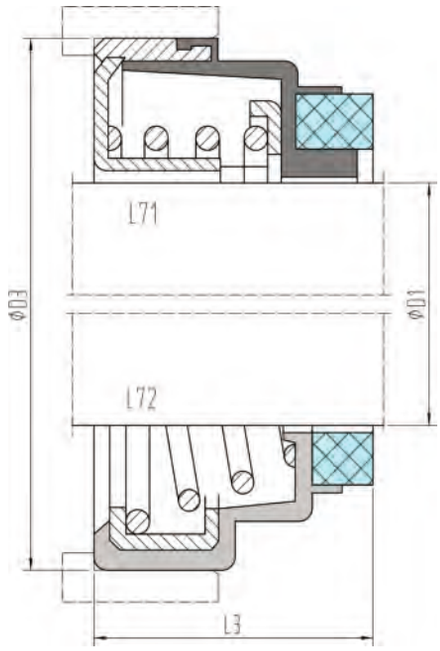

L71		
D1	**D3**	**L3**
13	30	15
17	35	16
21	40	17
22	42	18
27	47	19
32.5	52	20
37	60	20
42	65	24

L72		
D1	**D3**	**L3**
7	20	8
10	24	10
10.6	30	15
13	30	15
13	32/34	12
17.5	35	16

L8

L8		
D1	**D3**	**L3**
6	18	10
10	24	16
12	26	16
14	28	16
15	30	16
16	33	18
18	36	18
20	38	18
22	40	20
24	43	20
25	44	20
28	47	22
30	50	22
32	53	26
35	56.5	26
38	59	26
40	61	26
45	73	26
50	78	26
65	95	30
70	100	30

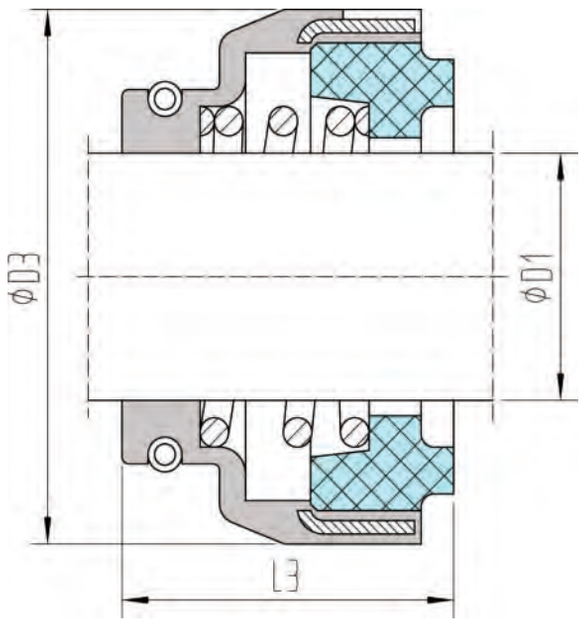

L9-L10

Large quantites seal

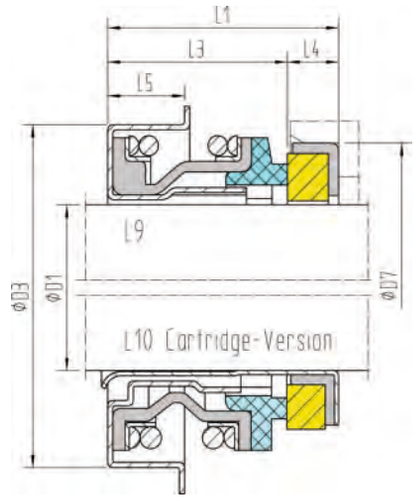

L9-L10													
D1	**D3**	**D7**	**L1**	**L3**	**L4**	**L5**	**D1 Doll**	**D3**	**D7**	**L1**	**L3**	**L4**	**L5**
13	28.5	25	18.2	13.2	5	8	0,500"	1.125	0.985	0.717	0.520	0.197	0.315
13	28.5	25.4	21.7	13.8	7.9	8	0,500"	1.125	1.000	0.855	0.543	0.312	0.315
17	36.4	31	19.8	14.8	5	8	0,625"	1.435	1.220	0.780	0.583	0.197	0.315
17	36.4	31.7	25.7	15.4	10.3	8	0,625"	1.435	1.250	1.011	0.605	0.406	0.315
20	40	35	20.5	15.5	5	9.5	0,750"	1.575	1.378	0.807	0.610	0.197	0.374
20	40	34.9	25.7	15.4	10.3	9.5	0,750"	1.575	1.375	1.011	0.605	0.406	0.374
30	52	48	27	19	8	11	1,125"	2.047	1.890	1.063	0.748	0.315	0.433

L11

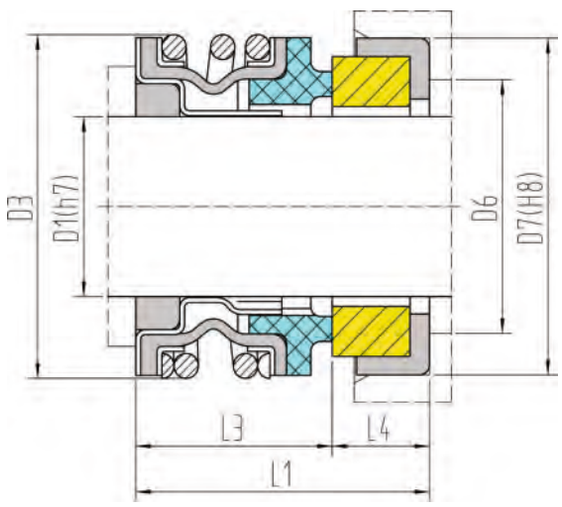

L11					
D1	**D3**	**D7**	**L1**	**L3**	**L4**
9.53	23.80	22.23	22.43	16.08	6.35
9.53	26.97	25.40	24.79	16.86	7.93
12.70	26.97	25.40	23.21	16.86	6.35
12.70	26.97	25.40	24.79	16.86	7.93
15.88	30.94	31.75	28.75	18.44	10.31
19.05	34.11	34.93	28.75	18.44	10.31
22.23	42.85	41.28	31.92	20.82	11.10
25.40	42.85	41.28	31.92	20.82	11.10

L12

L12		
D1	**D3**	**L3**
20	40	27
25	45	27
30	53	27
35	62	35
40	65	35
45	70	42
50	77	42
60	85	42

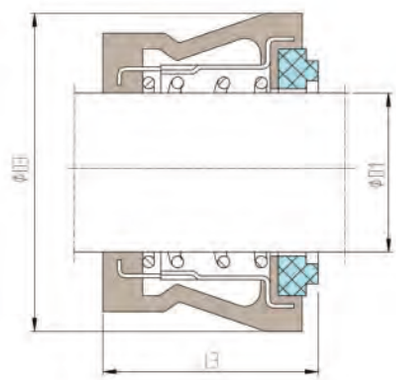

Metal bellow
No dynamic O-ring
Shaft protecting
Self cleaning
Independent of rotation

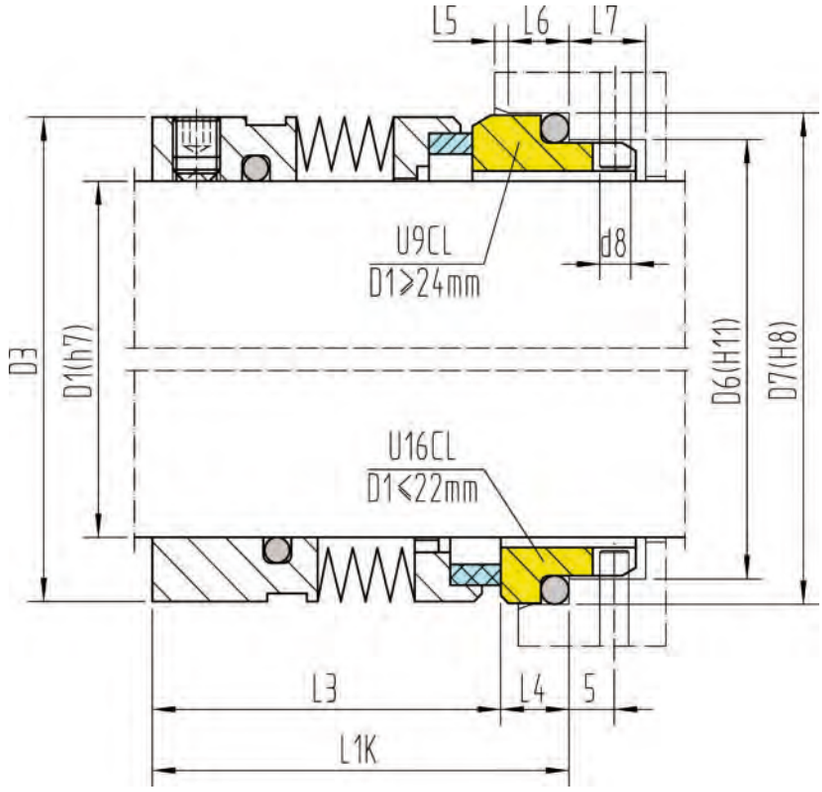

Materials:
Rotary: A, B, Q, U
Stationary: Q, U
Metal belows: G, M3, M5, M6, M7
Rubber parts: P, E, V, K, M

Operating limits:
(look at working conditions page 112)

p≤	16 bar
t=	-35 ÷ 220°C
v≤	20 m/s

EN 12756 (DIN 24960) **U9CL U16CL**

D1	D6	D7	D3	L1K	L3	L4	L6	L5	D8	L7
14	21	25	26	35	29.5	5.5	4	1.5	3	8.5
16	23	27	30	35	32.5	5.5	4	1.5	3	8.5
18	27	33	32	37.5	30.5	7	5	2	3	9
20	29	35	33.5	37.5	30.5	7	5	2	3	9
22	31	37	36.5	37.5	30.5	7	5	2	3	9
24	33	39	39	40	28.5	11.5	5	2	3	9
25	34	40	39.6	40	28.5	11.5	5	2	3	9
28	37	43	42.8	42.5	31	11.5	5	2	3	9
30	39	45	45	42.5	31	11.5	5	2	3	9
32	42	48	46	42.5	31	11.5	5	2	3	9
33	42	48	48	42.5	31	11.5	5	2	3	9
35	44	50	49.2	42.5	31	11.5	5	2	3	9
38	49	56	52.3	45	31	14	6	2	4	9
40	51	58	55.5	45	31	14	6	2	4	9
43	54	61	57.5	45	31	14	6	2	4	9
45	56	63	58.7	45	31	14	6	2	4	9
48	59	66	61.9	45	31	14	6	2	4	9
50	62	70	65	47.5	32.5	15	6	2.5	4	9
53	65	73	68.2	47.5	32.5	15	6	2.5	4	9
55	67	75	70	47.5	32.5	15	6	2.5	4	9
58	70	78	71.7	52.5	37.5	15	6	2.5	4	9
60	72	80	74.6	52.5	37.5	15	6	2.5	4	9
63	75	83	79	52.5	37.5	15	6	2.5	4	9
65	77	85	84.1	52.5	37.5	15	6	2.5	4	9
68	81	90	87.3	52.5	34.5	18	7	2.5	4	9
70	83	92	87.3	60	42	18	7	2.5	4	9
75	88	97	95	60	42	18	7	2.5	4	9
80	95	105	98.4	60	41.8	18.2	7	3	4	9
85	100	110	104.7	60	41.8	18.2	7	3	4	9
90	105	115	111	65	46.8	18.2	7	3	4	9
95	110	120	114	65	47.8	17.2	7	3	4	9
100	115	125	117.4	65	47.8	17.2	7	3	4	9

Metal bellow
No dynamic O-ring
Shaft protecting
Self cleaning
Independent of rotation

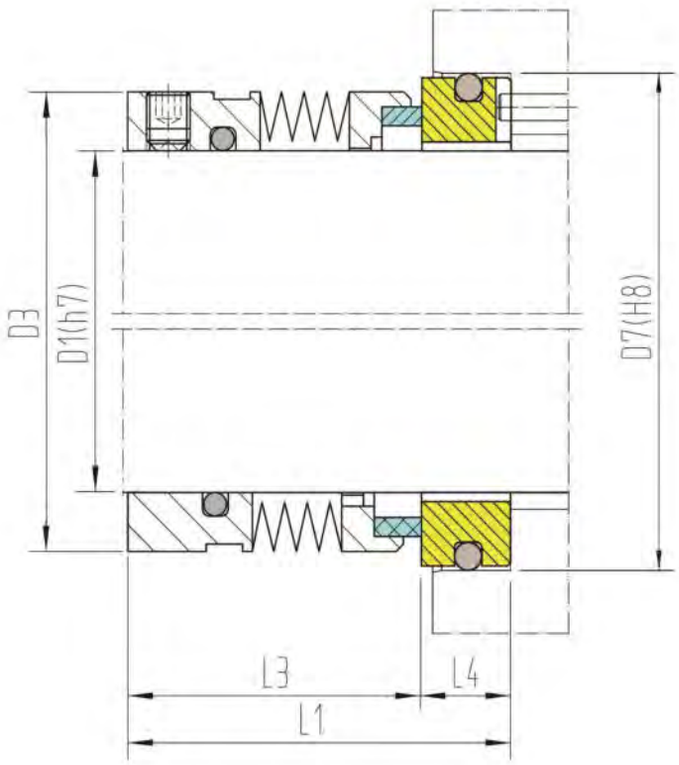

Materials:
Rotary: A, B, Q, U
Stationary: Q, U
Metal belows: G, M3, M5, M6, M7
Rubber parts: P, E, V, K, M

Operating limits:
(look at working conditions page 112)

p≤	16 bar
t=	-35 ÷ 220°C
v≤	20 m/s

EN 12756 (DIN 24960)					CWCN
D1	**D7**	**D3**	**L1**	**L3**	**L4**
18	34.15	32	38	27.5	10.5
20	35.7	34	38	27.5	10.5
22	37.3	36	38	27.5	10.5
24	40.5	39	40.5	30	10.5
-	-	-	-	-	-
25	40.5	39	40.5	30	10.5
28	47.65	42	43	32.5	10.5
30	50.8	44	44.5	32.5	12
32	50.8	46	44.5	32.5	12
33	54	47	44.5	32.5	12
35	54	50	44.5	32.5	12
38	57.15	53	46	34	12
40	60.35	56	46	34	12
43	63.5	59	46	34	12
45	63.5	59	46	34	12
48	66.7	62	46	34	12
50	69.85	66	48	34.5	13.5
53	73.05	69	48	34.5	13.5
55	76.2	71	48	34.5	13.5
60	79.4	75	53	39.5	13.5
-	-	-	-	-	-
65	92.1	85	55.5	39.5	16
70	95.25	88	61	45	16
-	-	-	-	-	-
75	101.6	96	61	45	16
-	-	-	-	-	-
80	114.3	99	65.5	44.5	20
85	117.5	105	65.5	44.5	20
-	-	-	-	-	-
90	123.85	108	69.5	49.5	20
95	127	115	69.5	49.5	20
-	-	-	-	-	-
100	133.35	121	69.5	49.5	20

Inch		
D1	**D3**	**L3**
0.750	1.312	1.250
-	-	-
0.875	1.437	1.250
-	-	-
0.937	1.500	1.250
1.000	1.562	1.250
1.125	1.687	1.250
-	-	-
1.250	1.812	1.312
-	-	-
1.375	1.937	1.437
1.500	2.062	1.437
1.625	2.187	1.437
1.750	2.312	1.437
-	-	-
1.875	2.437	1.500
2.000	2.625	1.500
2.125	2.687	1.500
2.250	2.812	1.562
2.375	2.937	1.562
2.500	3.187	1.562
2.625	3.312	1.625
2.750	3.437	1.625
2.875	3.625	1.687
3.000	3.750	1.687
3.125	3.875	1.750
3.250	4.000	1.750
3.375	4.125	1.750
3.500	4.250	1.875
3.625	4.375	1.875
3.750	4.500	1.875
3.875	4.625	1.875
4.000	4.750	1.875

Metal bellow
For high-temperature applications
Shaft protecting
Self cleaning
Independent of rotation

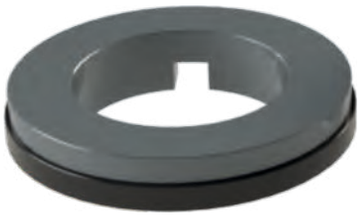

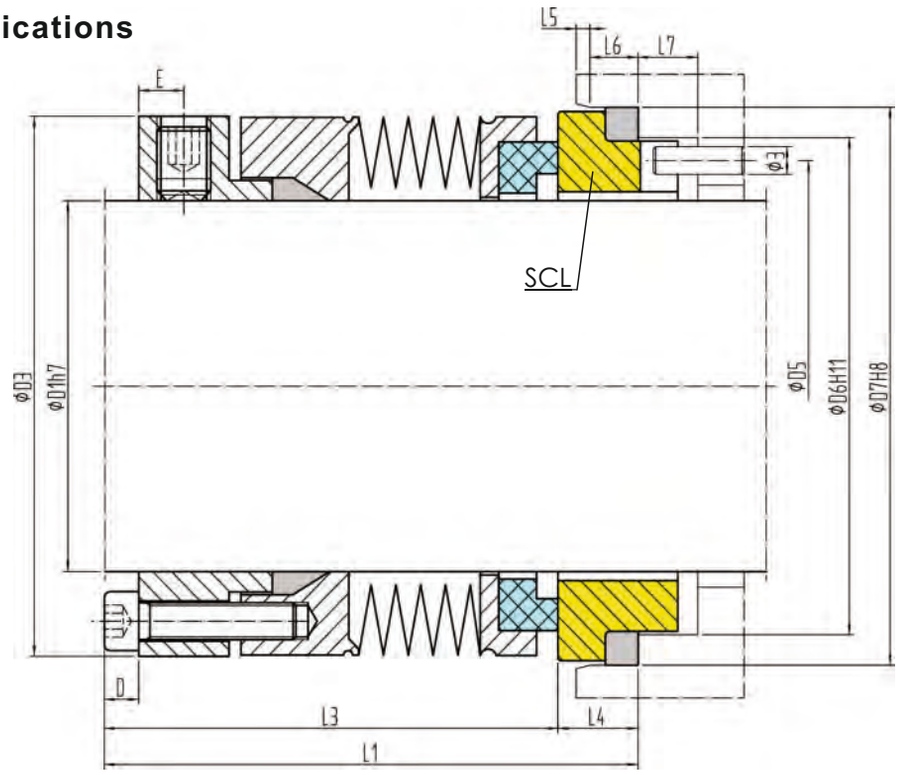

Materials:
Rotary: A, B, Q, U
Stationary: Q, U
Metal bellow: G, M3, M5, M6, M7
Rubber parts: G

Operating limits:
(look at working conditions page 112)

p≤	16 bar
t=	-35 ÷ 350°C
v≤	20 m/s

Special fitting dimensions SCL

D1	D6	D7	D3	L1	L3	L4	L6	L5	L7	D	D5	E
25	35.2	41.3	39.7	49.4	42.8	6.6	3.8	2.4	6	3.2	32.2	4.4
28	38.3	44.5	42.8	46.3	39.7	6.6	3.8	2.4	6	3.2	35.4	4.4
30	41.5	47.6	46.0	49.4	42.8	6.6	3.8	2.4	6	3.2	38.6	4.4
32	44.7	51.0	46.0	49.4	42.8	6.6	3.8	2.4	6	3.2	41.8	4.4
33	47.9	54.0	49.0	51.1	44.5	6.6	3.8	2.4	6	3.2	44.9	4.8
35	54.2	60.0	49.0	52.5	44.5	8.0	4.6	2.0	6	3.2	51.3	4.8
38	57.4	63.5	55.1	52.5	44.5	8.0	4.6	2.0	6	4.2	54.5	4.8
40	60.5	66.7	58.3	52.5	44.5	8.0	4.6	2.0	6	4.2	57.6	4.8
43	63.7	70.0	61.5	52.5	44.5	8.0	4.6	2.0	6	4.2	60.8	4.8
45	70.0	76.0	62.3	53.3	44.5	8.8	4.6	2.8	8	4.2	67.1	4.8
48	73.3	79.4	64.6	53.3	44.5	8.8	4.6	2.8	8	4.2	70.3	4.8
50	76.4	82.5	67.8	53.3	44.5	8.8	4.6	2.8	8	4.2	73.5	4.8
53	79.6	85.7	71.0	53.3	44.5	8.8	4.6	2.8	8	4.2	76.7	4.8
55	79.6	85.7	74.2	57.2	47.6	9.6	4.6	3.6	8	4.2	76.7	4.8
60	82.8	89.0	77.3	57.2	47.6	9.6	4.6	3.6	8	4.2	80.1	4.8
63	85.8	95.0	81.0	59.1	47.6	11.5	6.4	3.6	6	4.2	83.1	4.8
65	89.0	98.4	84.1	59.1	47.6	11.5	6.4	3.6	6	4.2	86.1	4.8
68	92.2	101.6	87.3	59.1	47.6	11.5	6.4	3.6	6	4.2	89.2	4.8
70	95.3	104.8	87.3	59.1	47.6	11.5	6.4	3.6	6	4.2	92.4	4.8
75	98.5	108.0	95.3	59.1	47.6	11.5	6.4	3.6	6	4.8	95.6	4.8
80	101.7	111.0	98.4	59.1	47.6	11.5	6.4	3.6	6	4.8	98.8	4.8
85	104.9	114.3	105.0	60.1	47.6	12.5	6.4	4.7	7	4.8	102.0	4.8
90	108.2	117.5	109.5	60.1	47.6	12.5	6.4	4.7	7	4.8	105.2	4.8
95	111.2	120.7	114.3	60.1	47.6	12.5	6.4	4.7	7	4.8	108.3	4.8
100	114.4	123.8	120.7	60.1	47.6	12.5	6.4	4.7	7	4.8	111.5	4.8

Metal bellow seal
Robust construction
No dynamic O-ring
Shaft protecting
Self cleaning
Independent of rotation

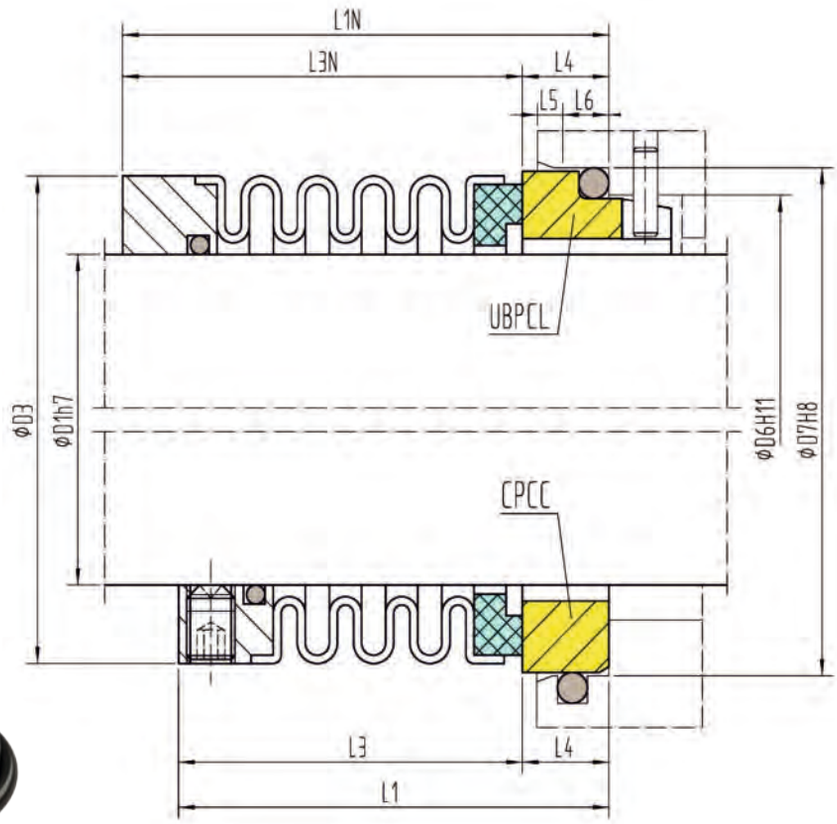

Materials:
Rotary: A, B, Q, U
Stationary: Q, U, V
Metal Bellow: G, M1, M6
Rubber parts: P, E, V, K, M

Operating limits:
(look at working conditions page 112)

p⩽	16 bar
t=	-35 ÷ 220°C
v⩽	20m/s

EN 12756 (DIN 24960)								UPBCL	
D1	**D6**	**D7**	**D3**	**L1N**	**L3N**	**L4**	**L7**	**L6**	**L5**
18	27	33	31	45	31.5	13.5	9	5	2
20	29	35	31	45	31.5	13.5	9	5	2
22	31	37	31	45	31.5	13.5	9	5	2
24	33	39	36	50	31.5	13.5	9	5	2
25	34	40	36	50	37	13	9	5	2
28	37	43	39	50	37.5	12.5	9	5	2
30	39	45	42	50	38	12	9	5	2
32	42	48	46	55	43	12	9	5	2
33	42	48	46	55	43	12	9	5	2
35	44	50	48.5	55	43	12	9	5	2
38	49	56	51.5	55	42	13	9	6	2
40	51	58	54	55	42	13	9	6	2
43	54	61	58.3	60	47	13	9	6	2
45	56	63	58.3	60	47	13	9	6	2
48	59	66	63.7	60	47	13	9	6	2
50	62	70	63.7	60	46.5	13.5	9	6	2
53	65	73	69	70	56.5	13.5	9	6	2
55	67	75	71	70	56.5	13.5	9	6	2
58	70	78	73.3	70	56.5	13.5	9	6	2
60	72	80	76.7	70	56.5	13.5	9	6	2
63	75	83	79.4	70	56.5	13.5	9	6	2
65	77	85	83	80	66.5	13.5	9	6	2
68	81	90	87.8	80	66.5	13.5	9	7	2
70	83	92	87.8	80	65.5	14.5	9	7	2
75	88	97	94	80	65.5	14.5	9	7	2
80	95	105	100.6	90	75	15	9	7	2
85	100	110	106	90	75	15	9	7	2
90	105	115	110.3	90	75	15	9	7	2
95	110	120	114.9	90	75	15	9	7	2
100	115	125	121.3	90	75	15	9	7	2

Inch						CPCC
D1	**D6**	**D7**	**D3**	**L1**	**L3**	**L4**
0,750	21	35.12	31.00	41.8	31.5	10.3
0,875	24	38.3	36.00	47.3	37	10.3
1,000	27.5	41.48	39.00	48.65	37.5	11.15
1,125	30.5	44.65	42.00	49.15	38	11.15
1,250	33.5	47.83	46.00	54.15	43	11.15
1,375	37	51	48.50	54.15	43	11.15
1,500	40	54.18	51.50	53.15	42	11.15
1,625	43.5	60.53	58.40	59.75	47	12.75
1,750	46.5	63.7	58.40	59.75	47	12.75
1,875	49.5	66.88	63.70	59.25	46.5	12.75
2,000	53	70.05	63.70	59.25	46.5	12.75
2,125	56	76.4	69.00	70.83	56.5	14.33
2,250	59	79.58	73.30	70.83	56.5	14.33
2,375	62.5	82.75	76.70	70.83	56.5	14.33
2,500	65.5	85.93	79.40	70.83	56.5	14.33
2,625	68.5	85.93	83.00	82.43	66.5	15.93
2,750	72	89.1	87.80	82.43	65.5	15.93
2,875	75	95.45	94.00	82.43	65.5	15.93
3,000	78.5	98.63	94.00	82.43	65.5	15.93
3,125	81.5	101.8	100.60	94.84	75	19.84
3,250	84.5	104.98	100.60	94.84	75	19.84
3,375	88	108.15	106.00	94.84	75	19.84
3,500	91	111.33	110.30	94.84	75	19.84
3,625	94	114.5	114.90	94.84	75	19.84
3,750	97.5	117.68	114.90	94.84	75	19.84
3,875	100.5	120.85	121.30	94.84	75	19.84
4,000	103.5	124.03	121.30	94.84	75	19.84

Short double working
Independent of rotation
Massive or brazed seal rings

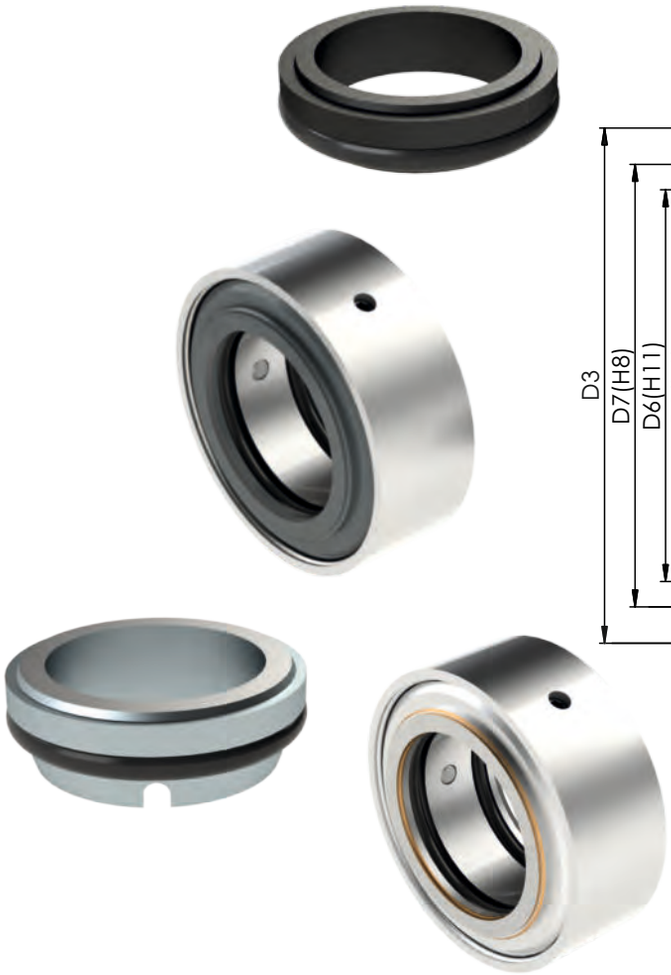

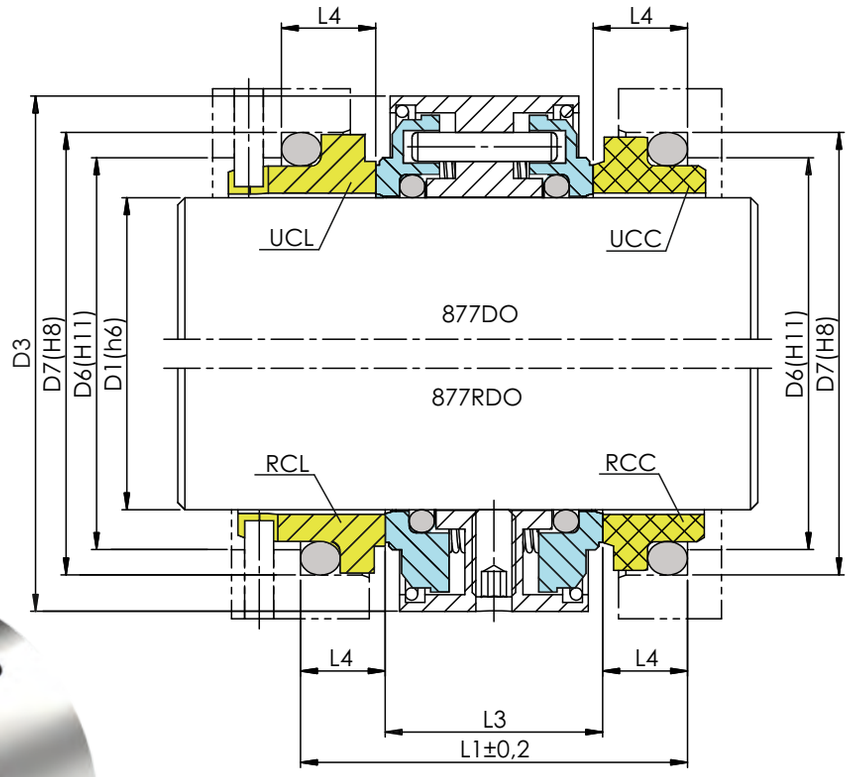

Materials:
Rotary: Q, U, G
Stationary: A, B, Q, U
Rubber parts: P, E, V, K, M

Operating limits:
(look at working conditions page 112)

p⩽	20 bar
t=	-35÷200°C
v⩽	15 m/s

EN 12756 (DIN 24960)					UCC UCL	
D1	**D6**	**D7**	**D3**	**L1**	**L3**	**L4**
20	29	35	40	43	23	10
25	34	40	44.5	45	25	10
28	37	43	47.5	45	25	10
30	39	45	50	47	27	10
32	42	48	52	47	27	10
35	44	50	56	48.5	28.5	10
43	54	61	71	56	30	13
50	62	70	80	58	30	14
55	67	75	88	63	35	14
65	77	85	98	63	35	14
70	83	92	108	67	35	16
75	88	97	120	72	40	16
80	95	105	125	76	40	18
85	100	110	130	76	40	18
90	105	115	135	81	45	18
95	110	120	140	81	45	18
100	115	125	145	81	45	18

Special fitting dimensions					RCC RCL	
D1	**D6**	**D7**	**D3**	**L1**	**L3**	**L4**
20	25	30.9	40	39	23	8
25	33	38.2	44.5	42	25	8.5
28	38	43.3	47.5	43	25	9
30	38	43.3	50	45	27	9
32	38	43.3	52	45	27	9
35	45	53.5	56	51.5	28.5	11.5
43	52	60.5	71	53	30	11.5
50	64	72.5	80	53	30	11.5
55	64	72.5	88	58	35	11.5
65	77	84.5	98	58	35	11.5
70	82	89.5	108	58	35	11.5
75	87	94.5	120	58	40	11.5
80	92	99.5	125	63	40	11.5
85	98	105.5	130	63	40	13.5
90	105	111.5	135	72	45	13.5
95	110	116.5	140	72	45	13.5
100	114	119.5	145	72	45	13.5

O-ring/PTFE wedge gasket seal
Massive, brazed or shrinked seal rings
Multiple springs
Independent of rotation

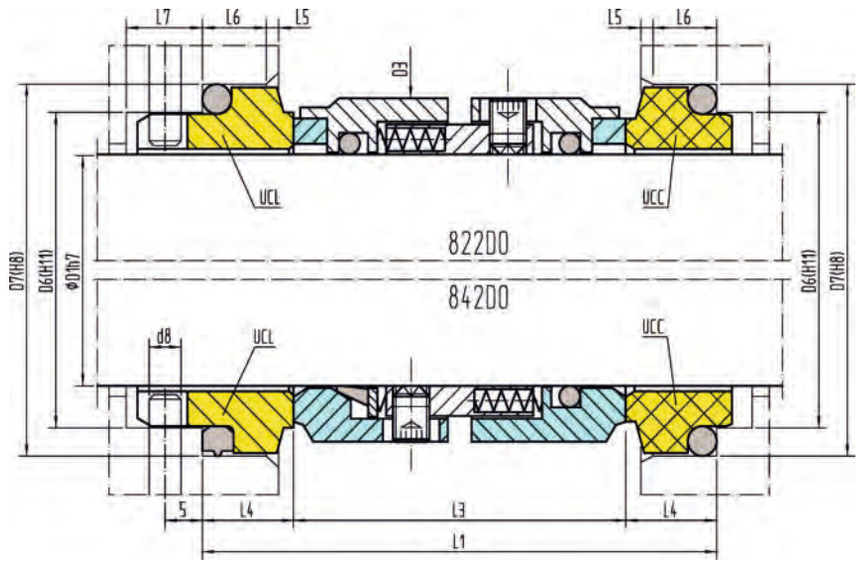

Materials:
Rotary: E, F, G, Q, U
Stationary: A, B, Q, U
Rubber parts: P, E, V, K, M, T

Operating limits:
(look at working conditions page 112)

p⩽	16 bar
t=	-35 ÷ 180°C
v⩽	15 m/s

EN 12756 (DIN 24960)										UCL UCC
D1	**D6**	**D7**	**D3**	**L1**	**L3**	**L4**	**L6**	**L5**	**D8**	**L7**
22	31	37	36	57	37	10	5	2	3	9
24	33	39	39	57	37	10	5	2	3	9
25	34	40	40	57	37	10	5	2	3	9
28	37	43	43	59	39	10	5	2	3	9
30	39	45	45	62	42	10	5	2	3	9
32	42	48	46.5	62	42	10	5	2	3	9
33	42	48	53	65	45	10	5	2	3	9
35	44	50	53	65	45	10	5	2	3	9
38	49	56	56	78	52	13	6	2	4	9
40	51	58	58	78	52	13	6	2	4	9
43	54	61	61	78	52	13	6	2	4	9
45	56	63	66	81	55	13	6	2	4	9
48	59	66	69	81	55	13	6	2	4	9
50	62	70	71	85	57	14	6	2.5	4	9
53	65	73	74	90	62	14	6	2.5	4	9
55	67	75	76	90	62	14	6	2.5	4	9
58	70	78	88	100	72	14	6	2.5	4	9
60	72	80	88	100	72	14	6	2.5	4	9
63	75	83	93	100	72	14	6	2.5	4	9
65	77	85	93	100	72	14	6	2.5	4	9
68	81	90	98	104	72	16	7	2.5	4	9
70	83	92	98	104	72	16	7	2.5	4	9
75	88	97	100	110	78	16	7	2.5	4	9
80	95	105	105	114	78	18	7	3	4	9
85	100	110	118	118	82	18	7	3	4	9
90	105	115	120	118	82	18	7	3	4	9
95	110	120	132	123	87	18	7	3	4	9
100	115	125	132	128	92	18	7	3	4	9

Massive replaceable seal rings
Multiple springs
Torque transmission with set screws,
or alternatively drive loaded pin - 83DO22
Independent of rotation

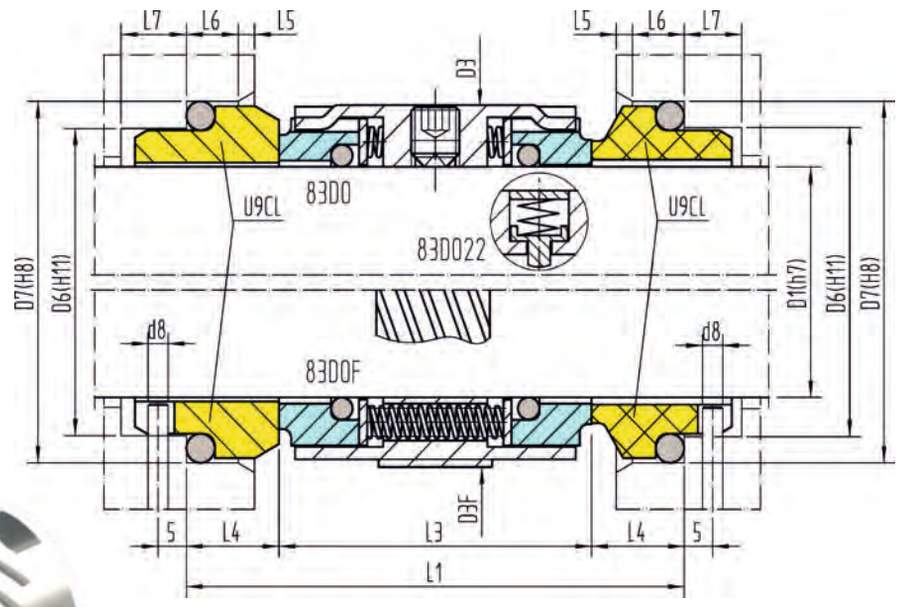

Optional with pumping screw
Note the conveying direction of the thread
page 121

Materials:
Rotary: E, F, G, Q, U
Stationary: A, B, Q, U
Rubber parts: P, E, V, K, M

Operating limits:
(look at working conditions page 112)

p≤	16 bar
t=	-35 ÷ 200°C
v≤	15 m/s

EN 12756 (DIN 24960) **U9CL**

D1	D6	D7	D3	D3F	L1	L3	L4	L6	L5	D8	L7
18	27	33	33	38	61	38	11.5	5	2	3	9
20	29	35	35	40	61	38	11.5	5	2	3	9
22	31	37	37	42	61	38	11.5	5	2	3	9
24	33	39	39	44	61	38	11.5	5	2	3	9
25	34	40	40	45	61	38	11.5	5	2	3	9
28	37	43	43	47	62	39	11.5	5	2	3	9
30	39	45	45	49	62	39	11.5	5	2	3	9
32	42	48	47	51	62	39	11.5	5	2	3	9
33	42	48	48	51	62	39	11.5	5	2	3	9
35	44	50	50	54	62	39	11.5	5	2	3	9
38	49	56	55	59	69	41	14	6	2	4	9
40	51	58	57	61	70	42	14	6	2	4	9
43	54	61	60	65	70	42	14	6	2	4	9
45	56	63	62	66	70	42	14	6	2	4	9
48	59	66	65	69	70	42	14	6	2	4	9
50	62	70	67	71	73	43	15	6	2.5	4	9
53	65	73	70	75	73	43	15	6	2.5	4	9
55	67	75	72	76	73	43	15	6	2.5	4	9
58	70	78	79	83	86	56	15	6	2.5	4	9
60	72	80	81	85	86	56	15	6	2.5	4	9
63	75	83	84	88	85	55	15	6	2.5	4	9
65	77	85	86	95	85	55	15	6	2.5	4	9
68	81	90	89	93	91	55	18	7	2.5	4	9
70	83	92	91	95	92	56	18	7	2.5	4	9
75	88	97	99	105	92	56	18	7	2.5	4	9
80	95	105	104	109	92.5	56	18.2	7	3	4	9
85	100	110	109	114	92.5	56	18.2	7	3	4	9
90	105	115	114	119	92.5	56	18.2	7	3	4	9
95	110	120	119	124	90.5	56	17.2	7	3	4	9
100	115	125	124	129	90.5	56	17.2	7	3	4	9

83EDO-83EDOF

Massive replaceable seal rings
Multiple springs
Independent of rotation
Stepped shaft / shaft sleeve
Balanced

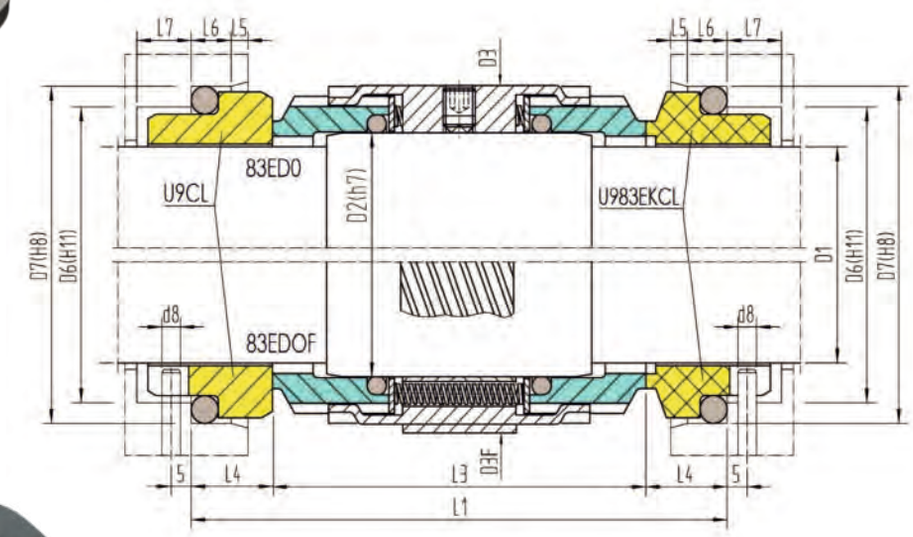

Optional with pumping screw
Note the conveying direction of the thread
page 121

Materials:
Rotary: E, F, G, Q, U
Stationary: A, B, Q, U
Rubber parts: P, E, V, K, M

Operating limits:
(look at working conditions page 112)

p⩽	25 bar
t=	-35 ÷ 200°C
v⩽	15 m/s

EN 12756 (DIN 24960) **U9CL U983EKCL**

D1	D2	D6	D7	D3	D3F	L1	L3	L4	L6	L5	D8	L7
14	18	21	25	33	-	73	53	10	4	1.5	3	8.5
16	20	23	27	35	-	73	53	10	4	1.5	3	8.5
18	22	27	33	37	41	76	53	11.5	5	2	3	9
20	24	29	35	39	43	76	53	11.5	5	2	3	9
22	26	31	37	41	44	76	53	11.5	5	2	3	9
24	28	33	39	43	46	77	54	11.5	5	2	3	9
25	30	34	40	45	48	77	54	11.5	5	2	3	9
28	33	37	43	48	52	77	54	11.5	5	2	3	9
30	35	39	45	50	53	77	54	11.5	5	2	3	9
32	38	42	48	55	58	79	56	11.5	5	2	3	9
33	38	42	48	55	58	79	56	11.5	5	2	3	9
35	40	44	50	57	60	80	57	11.5	5	2	3	9
38	43	49	56	60	64	85	57	14	6	2	4	9
40	45	51	58	62	65	85	57	14	6	2	4	9
43	48	54	61	65	68	85	57	14	6	2	4	9
45	50	56	63	67	70	84	56	14	6	2	4	9
48	53	59	66	70	74	84	56	14	6	2	4	9
50	55	62	70	72	75	93	63	15	6	2.5	4	9
53	58	65	73	79	82	97	67	15	6	2.5	4	9
55	60	67	75	81	84	97	67	15	6	2.5	4	9
58	63	70	76	84	87	104	74	15	6	2.5	4	9
60	65	72	80	86	94	104	74	15	6	2.5	4	9
63	68	75	83	89	92	109	79	15	6	2.5	4	9
65	70	77	85	91	94	98	68	15	6	2.5	4	9
70	75	83	92	99	104	112.4	76.4	18	7	2.5	4	9
75	80	88	97	104	108	112.4	76.4	18	7	2.5	4	9
80	85	95	105	109	113	112.4	76	18.2	7	3	4	9
85	90	100	110	114	118	112.4	76	18.2	7	3	4	9
90	95	105	115	119	123	112.4	76	18.2	7	3	4	9
95	100	110	120	124	128	110.4	76	17.2	7	3	4	9
100	105	115	125	129	133	110.4	76	17.2	7	3	4	9

MSG®

MECHANICAL SEALS GERMANY

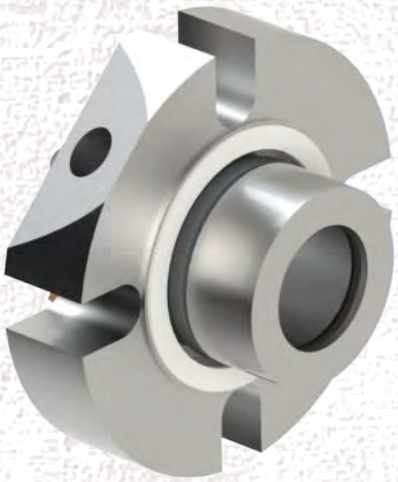

Cartridge mechanical seals

- 902CX
- 912CX
- 922CX
- 942CX
- 946
- 902CXANSI
- 912CXANSI
- 922CXANSI
- 902GA-902GA1
- 912GA-912GA1
- Special system
- Supply system
- Technical Info
- Repair service

Please demand for our special brochure.

902CX

Single seal
Balanced
Massive replaceable seal rings
Independent of rotation
Stationary springs
Flushing inlet standard

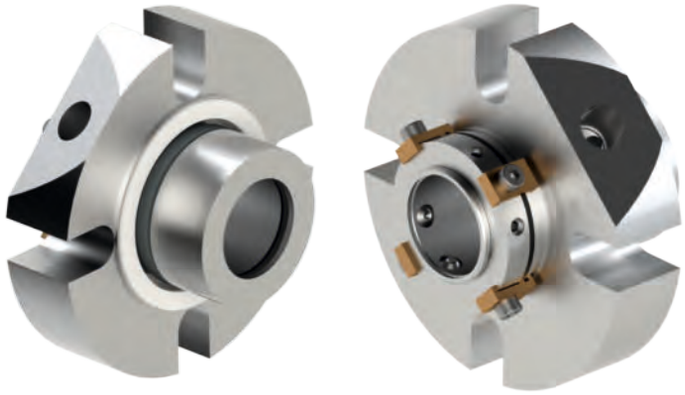

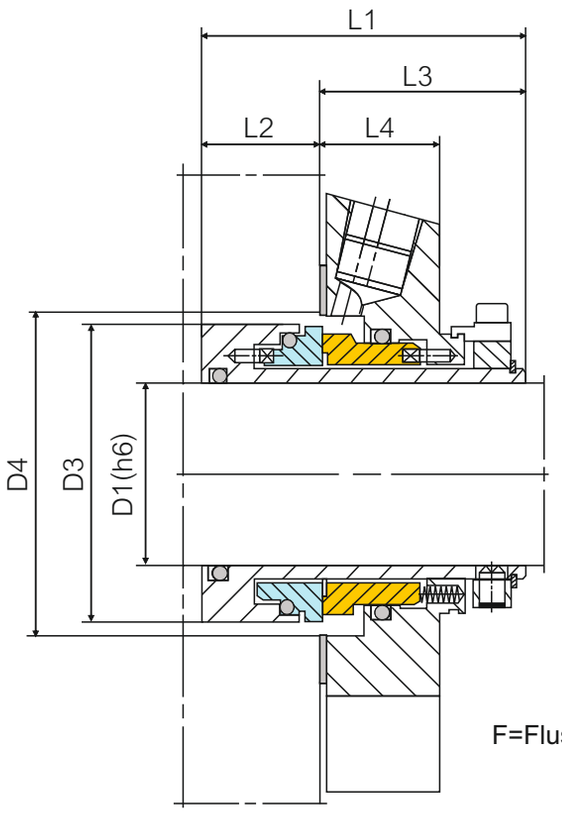

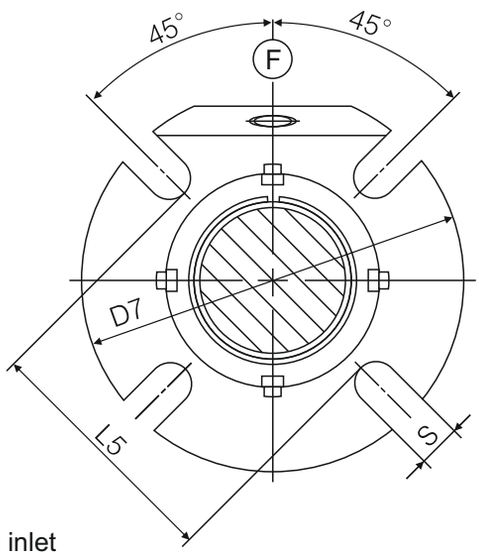

F=Flushing inlet

Materials:
Rotary: Q, U
Stationary: A, B, Q, U
Rubber parts: P, E, V, K, M

Operating limits:
(look at working conditions page 112)

p⩽	25 bar
t=	-35 ÷ 220°C
v⩽	10 m/s

D1	D3	D4 min	D4 max	L1	L2	L3	L4	L5	D7	S
25	43	44	51.5	67	24.6	42.4	25.4	62	105	13.2
28	46	47	52	67	24.6	42.4	25.4	62	105	13.2
30	48	49	56	67	24.6	42.4	25.4	65	110	13.2
32	49.8	51	57	67	24.6	42.4	25.4	67	110	13.2
33	49.8	51	57	67	24.6	42.4	25.4	67	113	13.2
35	53	54	61.5	67	24.6	42.4	25.4	70	123	13.2
38	56	57	66	67	24.6	42.4	25.4	75	123	14.2
40	58	59	68	67	24.6	42.4	25.4	75	133	14.2
42	60.5	61.5	69.5	67	24.6	42.4	25.4	80	133	14.2
43	60.5	61.5	70.5	67	24.6	42.4	25.4	80	138	14.2
45	62.5	64	73	67	24.6	42.4	25.4	81	138	14.2
48	65.6	67	75	67	24.6	42.4	25.4	84	148	14.2
50	68	69	78	67	24.6	42.4	25.4	87	148	18
53	72	73	87	67	24.6	42.4	25.4	97	148	18
55	73	74	83	67	24.6	42.4	25.4	90	148	18
60	78	79	91	67	24.6	42.4	25.4	102	157	18
65	84.8	85.7	98.5	67	24.6	42.4	25.4	109	163	18
70	93	95	108	67	24.6	42.4	25.4	118	178	18
75	100	101.6	118	84	26.6	57.4	28	129	190	18
80	106.4	108	124	84	26.6	57.4	28	135	195	18
85	109.5	111.1	128	84	26.6	57.4	28	139	198	22
90	115.9	117.5	135	84	26.6	57.4	28	145	205	22
95	119.1	120.7	138	84	26.6	57.4	28	148	208	22
100	125.4	127	144	84	26.6	57.4	28	154	218	22

Single seal with quench
Balanced
Massive replaceable seal rings
Independent of rotation
Stationary springs
Flushing inlet standard
Connections for flushing and pressureless quench

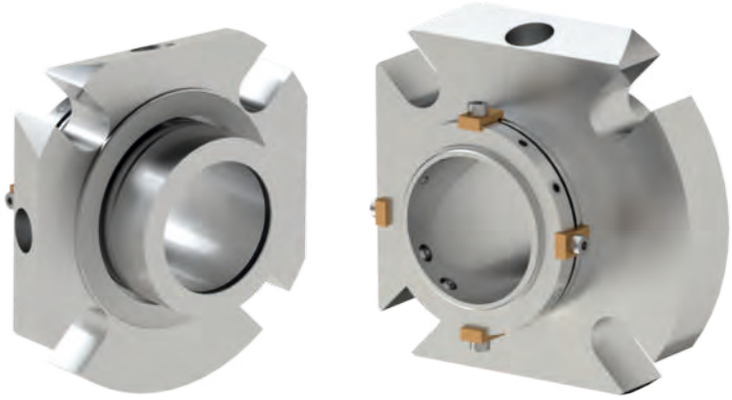

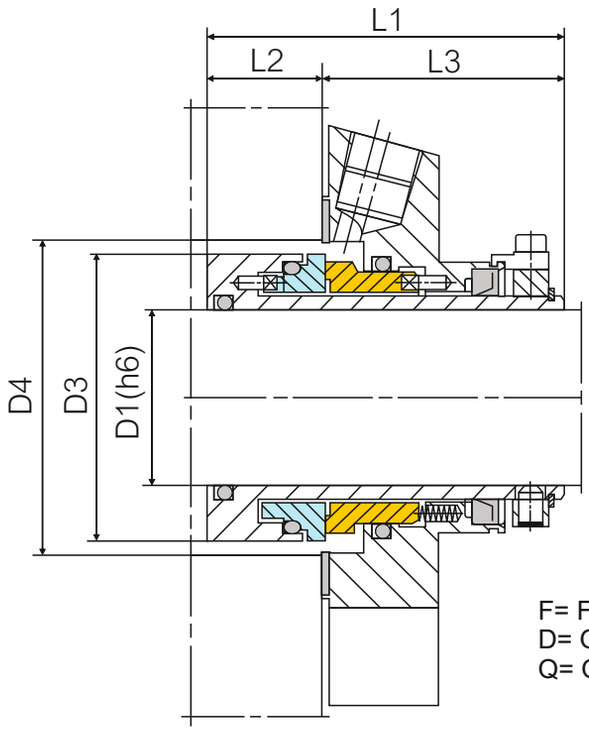

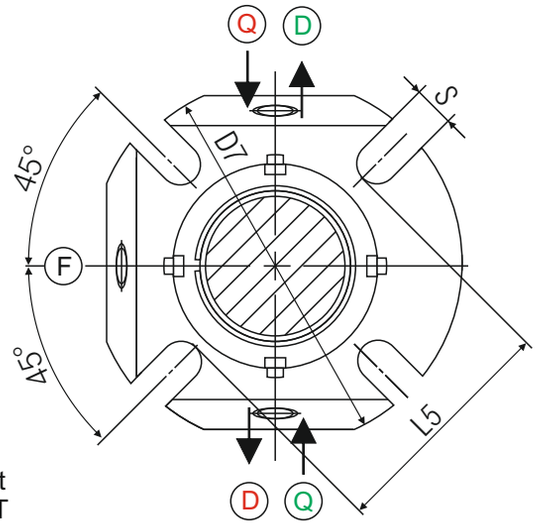

F= Flushing inlet
D= Quench OUT
Q= Quench ON

Quench flow (free outlet)
Quench from fluid reservoir

Materials:
Rotary: Q, U
Stationary: A, B, Q, U
Rubber parts: P, E, V, K, M

Operating limits:
(look at working conditions page 112)

p⩽	25 bar
t=	-35 ÷ 220°C
v⩽	10 m/s

D1	D3	D4 min	D4 max	L1	L2	L3	L5	D7	S
25	43	44	51.5	79.5	26.1	53.4	62	105	13.2
28	46	47	52	79.5	26.1	53.4	62	105	13.2
30	48	49	56	79.5	26.1	53.4	65	110	13.2
32	49.8	51	57	79.5	26.1	53.4	67	110	13.2
33	49.8	51	57	79.5	26.1	53.4	67	113	13.2
35	53	54	61.5	79.5	26.1	53.4	70	123	13.2
38	56	57	66	79.5	26.1	53.4	75	123	14.2
40	58	59	68	79.5	26.1	53.4	75	133	14.2
42	60.5	61.5	69.5	79.5	26.1	53.4	80	133	14.2
43	60.5	61.5	70.5	79.5	26.1	53.4	80	138	14.2
45	62.5	64	73	79.5	26.1	53.4	81	138	14.2
48	65.6	57	75	79.5	26.1	53.4	84	148	14.2
50	68	59	78	79.5	26.1	53.4	87	148	18
53	72	73	87	79.5	26.1	53.4	97	148	18
55	73	74	83	79.5	26.1	53.4	90	148	18
60	78	79	91	79.5	26.1	53.4	102	157	18
65	84.8	85.7	98.5	79.5	26.1	53.4	109	163	18
70	93	95	108	79.5	26.1	53.4	118	178	18
75	100	101.6	118	98	34.1	63.9	129	190	18
80	106.4	108	124	98	34.1	63.9	135	195	18
85	109.5	111.1	128	98	34.1	63.9	139	198	22
90	115.9	117.5	135	98	34.1	63.9	145	205	22
95	119.1	120.7	138	98	34.1	63.9	148	208	22
100	125.4	127	144	98	34.1	63.9	154	218	22

922CX

Double working seal
Balanced
Massive replaceable seal rings
Dependent of rotation
Stationary springs
Flushing inlet standard
Connections for quench
or barrier fluid

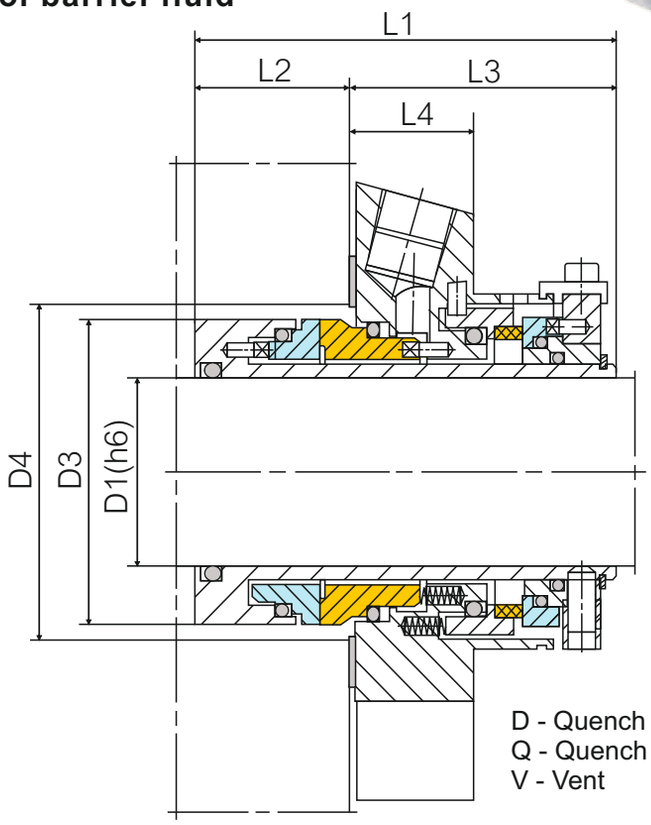

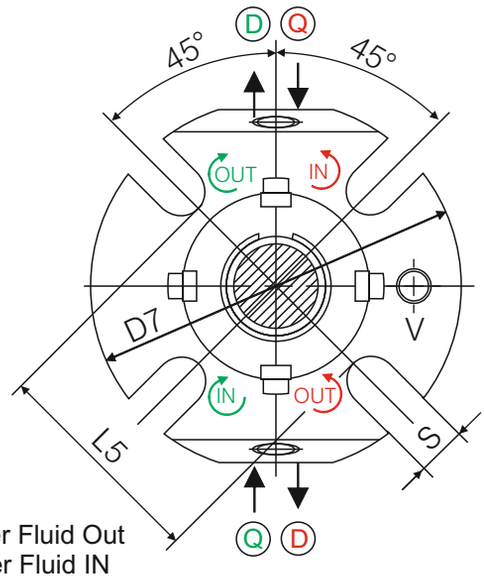

D - Quench / Barrier Fluid Out
Q - Quench / Barrier Fluid IN
V - Vent

Pay attention to direction of rotation !

Materials:
Rotary: Q, U
Stationary: A, Q, U
Rubber parts: P, E, V, K, M

Operating limits:
(look at working conditions page 112)

p⩽	25 bar
t=	-35 ÷ 220°C
v⩽	10 m/s

D1	D3	D4 min	D4 max	L1	L2	L3	L4	L5	D7	S
25	43	44	51.5	86.5	33.1	53.4	25.4	62	105	13.2
28	46	47	52	86.5	33.1	53.4	25.4	62	105	13.2
30	48	49	56	86.5	33.1	53.4	25.4	67	105	13.2
32	49.8	51	57	86.5	33.1	53.4	25.4	70	110	13.2
33	49.8	51	57	86.5	33.1	53.4	25.4	70	110	13.2
35	53	54	61.5	86.5	33.1	53.4	25.4	72	113	13.2
38	56	57	66	86.5	33.1	53.4	25.4	75	123	13.2
40	58	59	68	86.5	33.1	53.4	25.4	77	123	14.2
42	60.5	61.5	69.5	86.5	33.1	53.4	25.4	80	133	14.2
43	60.5	61.5	70.5	86.5	33.1	53.4	25.4	80	133	14.2
45	62.5	64	73	86.5	33.1	53.4	25.4	82	138	14.2
48	65.6	57	75	86.5	33.1	53.4	25.4	85	137	14.2
50	68	59	78	86.5	33.1	53.4	25.4	87	148	14.2
53	72	73	87	86.5	33.1	53.4	25.4	97	148	18
55	73	74	83	86.5	33.1	53.4	25.4	92	148	18
60	78	79	91	86.5	33.1	53.4	25.4	102	157	18
65	84.8	85.7	98.5	86.5	33.1	53.4	25.4	109	163	18
70	93	95	108	86.5	33.1	53.4	25.4	118	178	18
75	100	101.6	118	108	44.1	63.9	28	129	190	18
80	106.4	108	124	108	44.1	63.9	28	135	195	18
85	109.5	111.1	128	108	44.1	63.9	28	139	198	22
90	115.9	117.5	135	108	44.1	63.9	28	145	205	22
95	119.1	120.7	138	108	44.1	63.9	28	148	208	22
100	125.4	127	144	108	44.1	63.9	28	154	218	22

Short special mechanical seal
Stationary Sliding ring
Wave spring

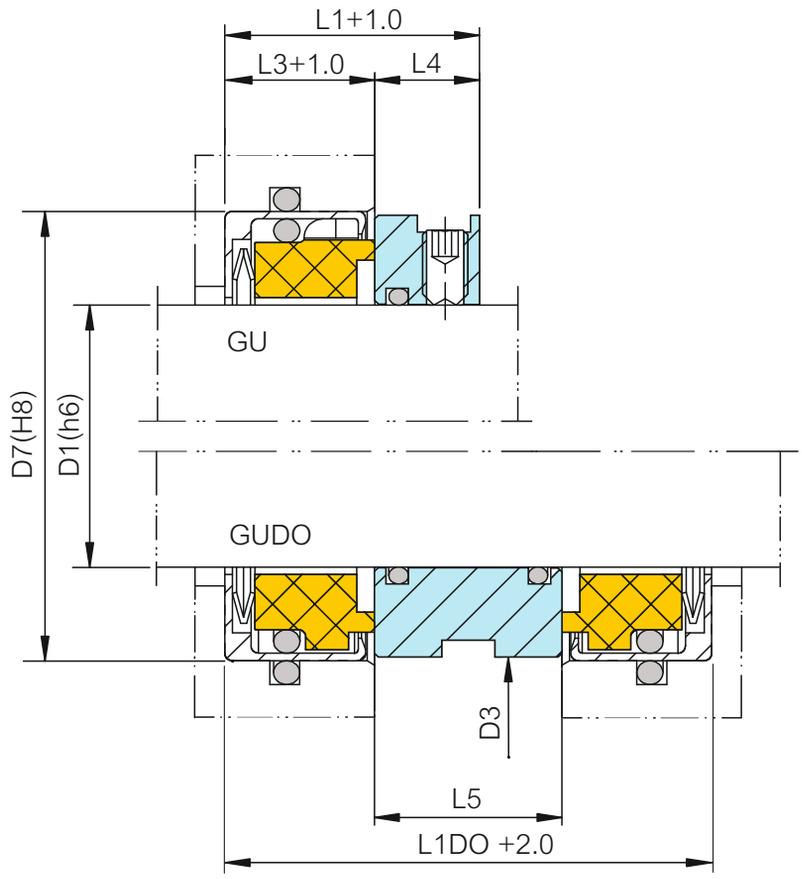

Materials:
Rotary: E, G, W
Stationary: A, B
Rubber parts: P, E, V, K, M

Operating limits:
(look at working conditions page 112)

p⩽	15 bar
t=	-35 ÷ 150°C
v⩽	20 m/s

D1	D7	D3	L1	L1DO	L4	L3	L5
10	30	28	29	53	13	16	21
12	32	30	29	53	13	16	21
15	35	33	29	53	13	16	21
18	38	36	29	53	13	16	21
20	40	38	30	57	14	16	25
22	42	40	30	57	14	16	25
25	45	43	30	57	14	16	25
26	50	48	33	63	14	19	25
28	53	51	33	63	14	19	25
30	55	53	33	63	14	19	25
35	60	58	33	63	14	19	25
40	65	63	36	65	17	19	27
45	70	68	36	65	17	19	27
50	75	73	36	65	17	19	27
55	80	78	38	69	17	21	27
60	85	83	38	69	17	21	27
65	90	88	38	69	17	21	27
70	95	93	38	69	17	21	27
75	100	98	38	69	17	21	27
80	105	103	38	69	17	21	27
85	110	108	38	69	17	21	27
90	115	113	38	69	17	21	27
100	125	123	38	69	17	21	27
110	140	138	42	82	17	25	32
120	150	148	45	82	20	25	32
130	160	158	45	82	20	25	32
140	170	168	45	82	20	25	32
150	180	178	45	82	20	25	32

Short special mechanical seal
Independent of rotation
Stationary Sliding ring
Balanced

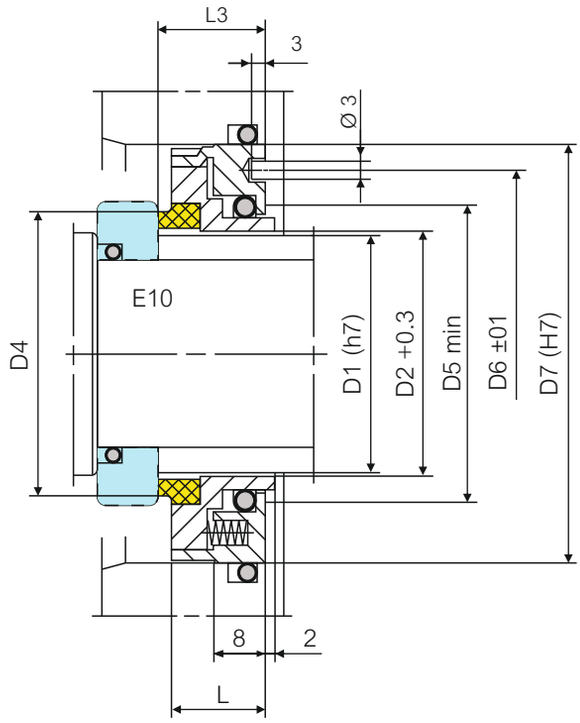

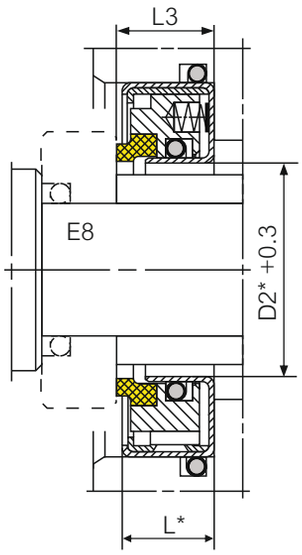

Materials:
Rotary: A, B
Rubber parts: P, E, V, K

Operating limits:
(look at working conditions page 112)

p⩽	25 bar
t=	-30 ÷ 150°C
v⩽	50 m/s

D1	D2	D2*	D7	D4	D5	D6	L3	L	L*
15	16	17	42	22.6	21	34	17	15.0	16
18	19	-	45	25.6	24	37	17	15.0	-
20	21	22	48	27.6	26	40	17	15.0	16
22	23	24	50	29.6	28	42	17	15.0	16
25	26	27	52	32.8	31	44	17	15.0	16
28	29	-	55	35.8	34	47	17	15.0	-
30	31	32	58	37.8	36	50	17	15.0	16
32	33	34	60	39.8	38	52	17	15.0	16
35	36	37	62	42.8	41	54	17	15.0	16
38	39	40	65	45.9	44	57	17	15.0	16
40	41	42	68	47.9	46	60	17	15.0	16
42	43	44	72	49.9	48	64	17	15.0	16
45	46	47	75	52.9	51	67	17	15.0	16
48	49	-	80	55.9	54	72	17	15.0	-
50	51	52	80	58.2	56	72	17	15.0	16
52	53	-	82	60.2	58	74	17	15.0	-
55	56	57	85	63.2	61	77	17	15.0	16
58	59	-	90	66.7	64	82	17	15.0	-
60	61	62	90	68.7	66	82	17	15.0	16
65	66	67	95	73.7	71	87	19	16.5	18
68	69	70	100	76.7	74	92	19	16.5	18
70	71	72	100	78.7	76	92	19	16.5	18
75	76	77	108	83.7	81	100	19	16.5	18
80	81	82	112	88.7	86	104	19	16.5	18
85	86	87	118	93.7	91	110	19	16.5	18
90	91	92	122	99.5	96	114	19	16.5	18
95	96	97	128	104.5	101	120	19	16.5	18
100	101	102	132	109.5	106	124	19	16.5	18

Mechanical face seal
Massive seal rings

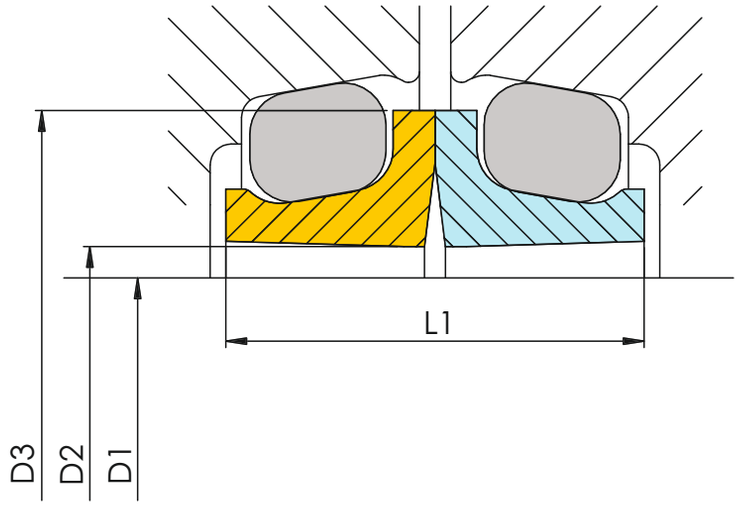

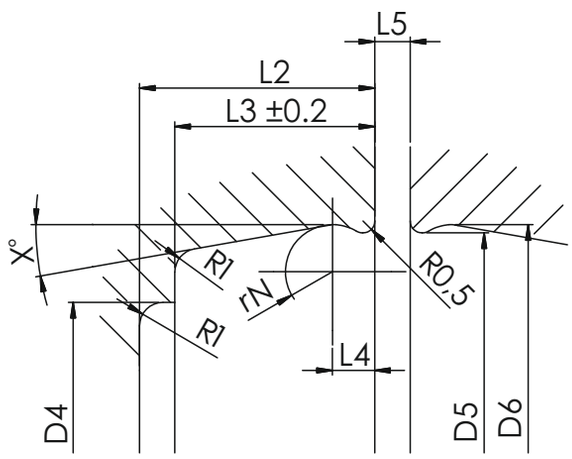

Materials:
Rotary, Stationary: on demand
Rubber parts: on demand

Special fitting dimensions

D1 max	D2	D3	D4	D5	D6	L1	L2	L3	L4	L5	rN	X°	TOL +-
30	34	45	42	46.5	47	14	8	6.5	1	-	1	10	0.1
35	39	50	46	51.5	52	14	8	6.5	1	-	1	10	0.1
35	38	51	46	53	53.7	20.4	11	9	1.8	-	2	10	0.1
36	40	52	46	54.2	55	20	11	9	1	-	1	15	0.1
44	48	58	55	59.4	59.9	14.4	8	6.3	1.5	-	1.7	10	0.1
39	43	58	53.4	60.8	61.6	24	12	10	1.8	-	2.5	10	0.1
41	45	58	54	61	61.6	21.6	12.5	10.5	1.8	-	2.5	10	0.1
41	45	59	-	-	-	26.8	-	-	-	-	-	-	-
42	46	59	53	61.2	61.6	20	11	9	2	-	2.5	12	0.1
45	48	62	58	67.2	68	26	14	12	2	-	3	10	0.1
-	51	65.6	-	-	-	26.8	-	-	-	-	-	-	-
52	55.5	70	65.5	73.1	73.8	22	11.5	10	2.4	-	5	10	0.1
53	56	70	66	75.2	76	26	14	12	2	-	2.5	10	0.1
58	61	73	66.8	75.5	75.8	17.6	7.5	6.5	1	-	1.4	10	0.1
57	60	74	70	77.4	78.4	20.6	11	9	1.9	-	2.5	12	0.1
53	58	75	66	78.6	79.2	27	14	12	2	-	2.5	12.3	0.1
61	64	78	74	83.8	84.6	25	14.5	12.5	2	-	3	12	0.1
60.5	63.5	82.5	73.5	85.7	86.5	31.8	16.8	15.2	3.5	-	4.8	10	0.1
66	69	84	78.5	88.6	89.6	24	13	11	1.9	-	3	12	0.1
66	70	84	-	-	-	20	-	-	-	-	-	-	-
68	71	84	80.8	86.7	87.4	20	10	8.5	1.8	-	2	10	0.1
64	67.5	86.5	78	90	91	31.8	17	14.5	2.8	-	5	10	0.1
70	74	86.5	80	90.7	91.4	22.5	11.5	9.5	2	-	3	10	0.1
75.9	77.5	87.6	89.5	90.2	90.7	13.6	8	7.5	1.4	-	1.5	15	0.1
70	73.5	88.5	82	89.4	90.2	20.4	14.3	12.7	2.2	-	2.8	10	0.1
66	69	89	83	91.5	92.5	24	13.5	11	2.8	-	5	10	0.1
65	70	90	84	94.7	95.5	29	15.5	13.5	2	-	3	12	0.1
70.1	73.1	91.9	83	95.2	96	31.8	16.8	15.2	3.5	-	4.8	10	0.1
70.1	72.5	92	83	95.2	96	35.6	20.9	15.2	3.5	-	4.8	10	0.1
70	73	92	-	-	-	31.8	-	-	-	-	-	-	-
73	75	94	89	100.6	101.4	29	16.5	14.5	2	-	3	10	0.1
71	75	94.5	-	-	-	32	-	-	-	-	-	-	-
71	75	97	-	-	-	26	-	-	-	-	-	-	-
78	81	98	91	101.3	102.3	28	14.5	12.5	2.8	-	5	10	0.1
81	85	99	-	-	-	20	-	-	-	-	-	-	-
76	80	100	93	103.3	104.1	30	18	15	2.3	-	2.5	10	0.1
80.5	82.5	102	94.3	106.5	107.3	35.6	20.9	15.2	3.5	-	4.8	10	0.1
87.4	90	105	100.4	106.7	107.3	36	14.2	11.8	2.9	-	2.8	10	0.1
90	94	106.5	102	110.8	111.6	23	11.5	9.5	2	-	3	10	0.1
94.9	96.5	106.8	108.5	109.2	109.7	13.6	8	7.5	2	-	1.5	15	0.1
86	90	109	104	111.7	112.5	32	17	14.5	3.2	-	3	12	0.1
87.4	90.4	109.4	100.4	112.7	113.4	31.8	16.8	15.2	3.5	-	4.8	10	0.1
88.5	90.4	109.5	100.4	112.7	113.4	35.6	20.9	15.2	3.5	-	4.8	10	0.1
88	92	109.5	105	113	113.8	22	11.5	9.5	2	-	3	10	0.1
91	95	114	107	119.2	120	32	17	15	2.5	-	3	12	0.1
100	104	117	107	120.2	121	22	11.5	9.5	2	-	3	10	0.1
97	100	118	-	-	-	31	-	-	-	-	-	-	-

D1 max	D2	D3	D4	D5	D6	L1	L2	L3	L4	L5	rN	X°	TOL +-
98	102	118	-	-	-	27	-	-	-	-	-	-	-
97	100	119.1	110	122.2	123	31.8	16.8	15.2	3.5	-	4.8	10	0.1
97	100.1	119.1	110	122.2	123	31.8	16.8	15.2	3.5	-	4.8	10	0.1
95	98.5	119	-	-	-	29	-	-	-	-	-	-	-
98	102	122	-	-	-	32	-	-	-	-	-	-	-
99	103	122	115	126.2	127.2	32	17.5	15.5	2.5	-	3	12	0.1
100	104	122.5	117.5	125.1	125.5	22.5	11.5	9.5	2	-	3	10	0.1
100	104	125	117	127.5	128.5	28	14	12.5	2.8	-	5	10	0.1
103	107	125	119.5	129.4	130.4	24	13.5	11	2.8	-	5	10	0.1
104	109.5	127	-	-	-	32	-	-	-	-	-	-	-
105	110	127	-	-	-	31.8	-	-	-	-	-	-	-
106	110	128	121	132	133	32	17	14.5	2.5	-	3	12	0.1
107	111	128	123	132	132.5	22	12.3	10.6	2.8	-	3	10	0.1
104	109	132	124	135.5	136.5	32	17.5	15.5	2.5	-	3	10	0.1
110	115	137	130	140.8	141.8	31	16.5	14.5	2.5	-	3	10	0.1
114	117	138	132	141.5	142.5	31.8	17	14.5	2.8	-	5	10	0.1
115	120	139	129.3	142	143	31.8	17.4	14.3	3	-	5.4	10	0.1
123.5	126.5	139	136.9	143.1	143.8	26.8	14.2	11.8	2.9	-	2.8	10	0.1
113	117	140	132	141.5	142.5	28	14	12.5	2.8	-	5	10	0.1
115	119	140	-	-	-	28	-	-	-	-	-	-	-
117	120	141	138	143	144	31.8	17.5	14.5	2.8	-	5	10	0.1
123	127	141	137	146	147	29	15.5	13	2.8	-	5	10	0.1
120	124	141	136	145.3	146.4	22	12.3	10.6	2.8	-	3	9.5	0.1
124	127	141.2	136.9	143.1	143.8	25.4	14.2	11.8	2.9	-	2.8	10	0.1
116	120	142	133	148	149	38	19	17	2.5	-	3	10	0.1
120	125	144.1	136	147.5	148.5	31.8	17.4	14.3	3	-	5	10	0.1
123	126	146	137	149.2	150	31.8	16.8	15.2	3.5	-	4.8	10	0.1
124	127	146	137	149.2	150	31.8	16.8	15.2	3.5	-	4.8	10	0.1
125	130	150.5	144	154.6	155.6	32.	16.5	14.5	2.5	-	5	10	0.1
125	130	152	144	158	159	38.5	20.5	18.5	2.5	-	3	10	0.1
132	137	153	-	-	-	30	-	-	-	-	-	-	-
139.7	142.7	156.9	152.1	158.9	159.7	25.4	14.2	11.8	2.9	-	2.8	10	0.1
138	143	160	154	163	164	27	14.5	12	2.8	-	5	10	0.1
142	147	167	160	170	171	28	15.5	13	2.8	-	5	10	0.1
143	146	168	159	175.9	176.8	38	20.5	18	3	-	6.5	10	0.1
150	154	168	162.5	170	171	27	14.5	12	2.3	-	3	10	0.1
150.9	153.9	168.1	164	170.2	171	25.4	14.2	11.8	2.9	-	2.8	10	0.1
150	154	169	166	173.5	174.5	22	11	9.2	2.3	-	3	10	0.1
142	148	170	164	174.6	175.6	31	17	15	2.5	-	3	10	0.1
150	154	170	167	174.1	175.1	21	10	9.2	2.3	-	3	10	0.1
149	152	171.5	162.5	174.7	175.4	32	16.8	15.2	3.5	-	4.8	10	0.1
149	153	171.5	164.5	175.3	176.3	28	14.5	12.5	2.8	-	5	10	0.1
143.3	146.3	171.7	158.9	175.9	176.8	38	20.3	18.4	3.7	-	6.3	10	0.1
147	150	172	165	178	179	40	20	18	2.5	-	2	10	0.15
147	151.5	172	-	-	-	28	-	-	-	-	-	-	-
150	154	173.5	166	177	178	31.8	17	14.5	2.8	-	5	10	0.15
142	146	175	162	179.5	180.5	38	20.5	17.7	3	-	6.3	10	0.15
156	159.5	180	-	-	-	32	-	-	-	-	-	-	-
161	165	181	176.5	184	185	27	14.5	12	2.7	-	4	10	0.15
160	164	189	179	192.5	193.5	30	17	14.5	2.8	-	5	10	0.15
165	169	189	-	-	-	32	-	-	-	-	-	-	-
168	172.5	190	188	191.8	192.7	25.4	14.3	12.7	2.3	-	2.8	10	0.15
170	174	190	188	191.8	192.7	25.4	14.3	12.7	2.3	-	2.8	10	0.15
160.3	163.3	191.2	178.9	195.9	196.8	38	20.3	18.4	3.7	-	6.3	10	0.15
160	163.3	191.3	178.9	195.9	196.8	46	24.1	18.4	3.7	-	6.3	10	0.15
173	178	197.4	196	201.9	202.2	21.4	10.6	9.4	1.2	-	3	10	0.15
174	178	199	190	202.4	203.6	32	16	14.5	3	-	5	10	0.15
173	177	200	191	203.4	204.5	31	17	14.5	3.1	-	5	10	0.15
175	178	200	192	209.6	210.6	38	21	19	3	-	4	10	0.15
182	186	203	190.5	204.9	205.7	25.4	16	14.5	2.3	-	2.8	10	0.15
187	191	210	203	213	214	28	14.5	12.5	2.8	-	5	10	0.15
179.3	182.3	210.3	197.5	214.4	215.4	38	20.3	18.4	3.7	-	6.3	10	0.15
179	182.4	210.3	197.5	214.4	215.4	46	24.1	18.4	3.7	-	6.3	10	0.15
188	191	215	-	-	-	34.4	-	-	-	-	-	-	-
189	192	215	207	219.8	220.8	33	18.5	16.5	3	-	4	10	0.15
197	201	222.3	217.9	224.1	224.9	26.5	14.2	11.8	2.9	-	2.8	10	0.15
201	205	227	219	230.5	231.5	30	17	14.5	2.8	-	5	10	0.15
196	200	228.5	216	232.5	233.5	38	21	18	3	-	6.3	10	0.15
206	209	234	224	241.6	242.6	42	22.5	19.5	3	-	4	10	0.15
215	220	239.5	232	243	244	31.8	16.5	14.5	2.8	-	5	10	0.15
220.5	223.5	251.4	238.7	255.7	256.6	38	20.3	18.4	3.7	-	6.3	10	0.15
220	223.5	251.5	238.7	255.7	256.6	46	24.1	18.4	3.7	-	6.3	10	0.15
220	225	252	241	257	258	38	21	19	3	-	4	10	0.2
228	231.6	259.6	247	263.8	264.7	38	20.5	18.4	3.7	-	6.3	10	0.2
236	240	262.8	255.5	272.5	273.5	38	20.5	18	3.1	-	6.5	10	0.2
234	239	268	257	273.2	274.2	40	22.5	20.5	3	-	4	10	0.2
247	250	276	266	283.6	284.6	44	24	20.5	3	-	4	10	0.2
248	252	280	265	284.5	285.5	38	20	18	3.1	-	6.5	10	0.2
256	260	288	-	-	-	40	-	-	-	-	-	-	-
261.9	264.9	292.8	280	297	297.8	38	20.3	18.4	3.7	-	6.3	10	0.2
261	265	292.8	280	297	297.8	46	24.1	18.4	3.7	-	6.3	10	0.2
271	275	303	290	307	308	38	20.5	18	3.1	-	6.5	10	0.2
280	282.9	310.8	298.4	315.4	316.3	38	20.3	18.4	3.7	-	6.3	10	0.2
296	300	325	318	334.5	335.5	38	20.5	17.5	3.1	-	6.5	10	0.2
297	301	328	315.1	332.1	333	38	20.3	18.4	3.7	-	6.3	10	0.2
295	300	328	315	332	333	40	21	18.5	3	-	4	10	0.2
315.5	318.5	346.4	333.7	350.7	351.6	38	20.3	18.4	3.7	-	6.3	10	0.2
315	319	346.5	333.7	350.7	351.6	46	24.1	18.4	3.7	-	6.3	10	0.2
335	339.5	369	358	373.8	374.8	40	21.5	19	3	-	4	10	0.2
345	350	375	368	384.5	385.5	38	20.5	17.5	3.1	-	6.5	10	0.2
363.5	366.5	394.4	381.7	398.6	399.5	38	20.3	18.4	3.7	-	6.3	10	0.25
363.5	366.5	394.5	381.7	398.6	399.5	48	24.1	18.4	3.7	-	6.3	10	0.25
365	370	398	-	-	-	38	-	-	-	-	-	-	-
375	380.5	405	-	-	-	40	-	-	-	-	-	-	-
382	387	415	402	419.3	420.3	38	20.5	17.5	3	-	6.5	10	0.25
425	428.5	454	444.6	461.3	462.3	37	21	18.5	3	-	4	10	0.25
426.2	429.2	457.2	444.4	461.4	462.3	38	20.3	18.4	3.7	-	6.3	10	0.25
465	470	500	490	510.2	512.2	50	25.5	23.5	4	-	6	10	0.25
502.4	505.4	533.4	520.6	537.6	538.5	44	26.2	21.3	3.7	-	6.3	10	0.25
502	507	547	-	-	-	60	-	-	-	-	-	-	-
524	530	560	545	570.2	572.2	50	25.5	23.5	4	-	6	10	0.4
575.5	580	608	596	611	613	43.6	21.7	19.7	4	-	6.5	10	0.25
586	591	623	613	633.2	635.2	50	25.5	23.5	4	-	6	10	0.4
660	667	700	687.6	704.6	705.6	44	23.4	18.4	3.7	-	6.3	10	0.25
700	710	750	740	760.2	762.2	50	25.5	23.5	4	-	6	10	0.4
815	830	886	860	890.6	891.6	80	39.5	34.5	4.4	-	10	10	0.4

Different special constructions

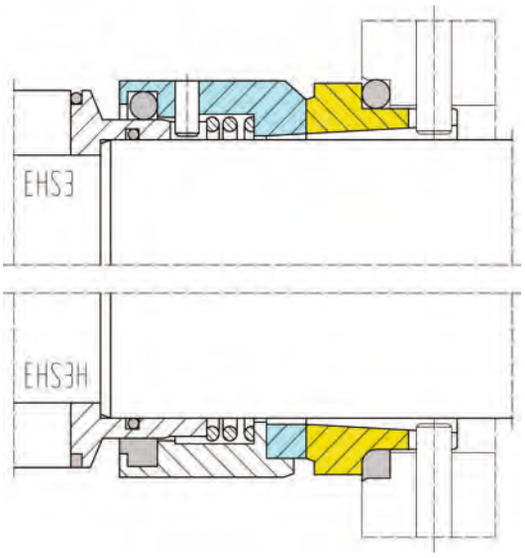

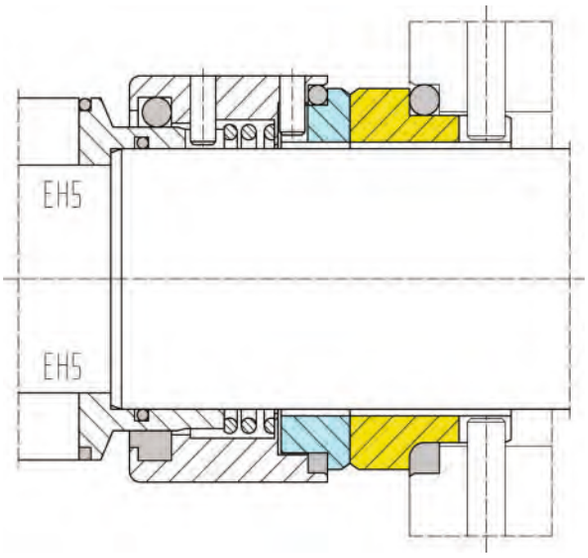

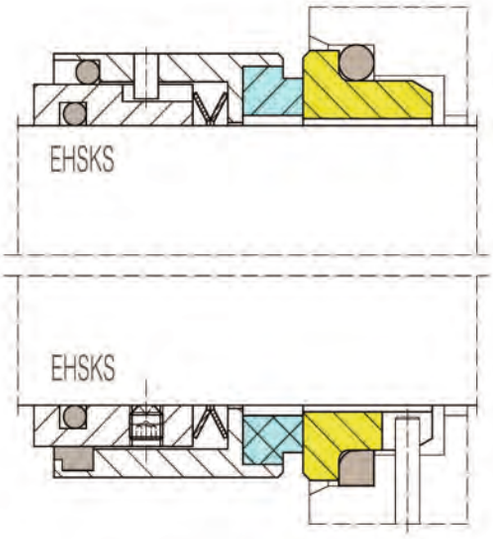

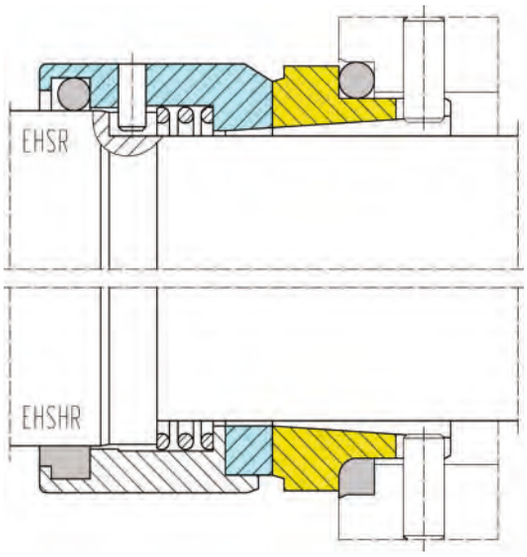

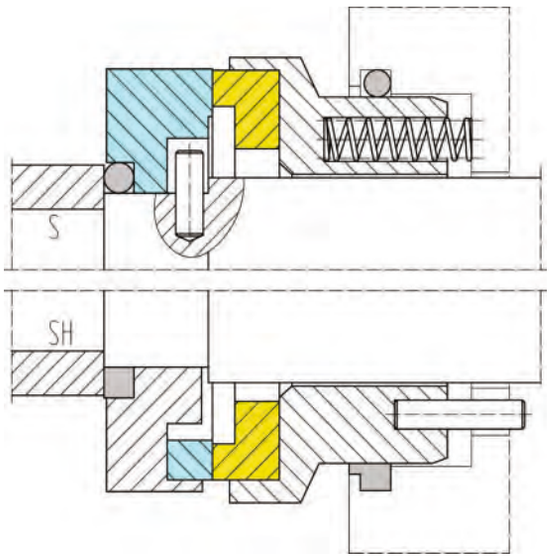

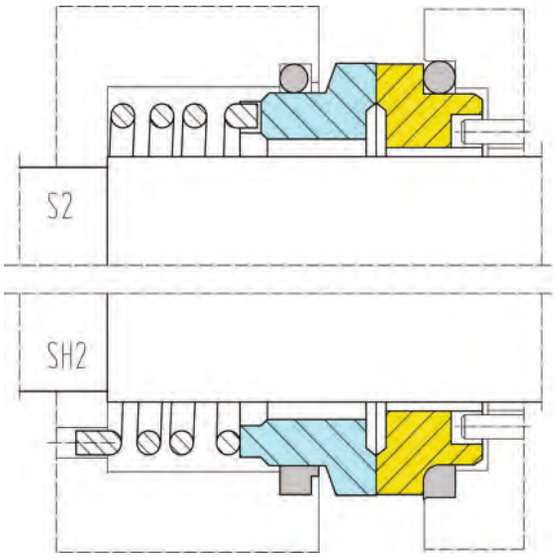

EU1935/ 2004

Special versions

MECHANICAL SEALS

Food Industry
Biotechnology
Sterile Processes
Chemical, pharmaceutical Industry

MSG®
MECHANICAL SEALS GERMANY

Please demand for our special brochure.

MSG®

Reference Hygiene Application

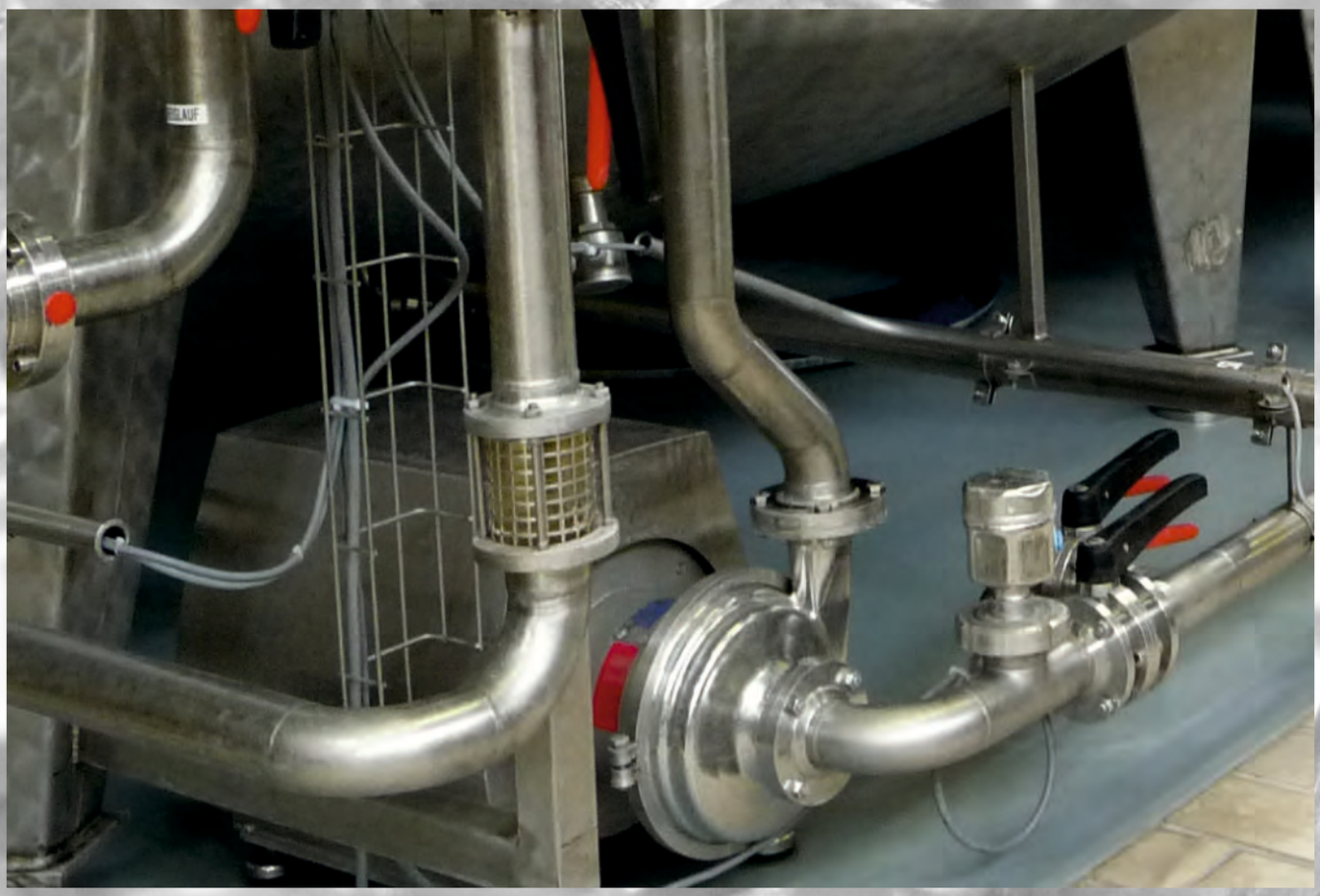

MSG®

MECHANICAL SEALS GERMANY

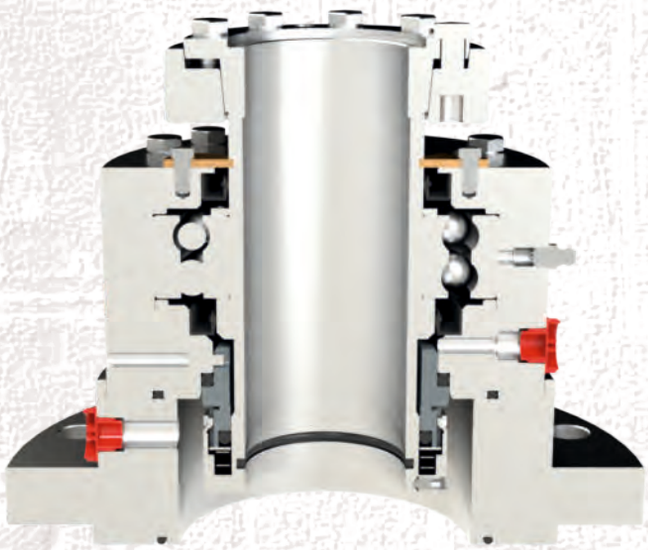

Mixer, agitators mechanical seals

- 7XB
- 7XC
- 7XE
- 74
- RW184 / L
- RW184D / L
- RWVR5D / L
- RWVR34D / L
- Special system
- Supply system
- Technical Info
- Repair service

Please demand for our special brochure.

MSG®

Reference Agitators

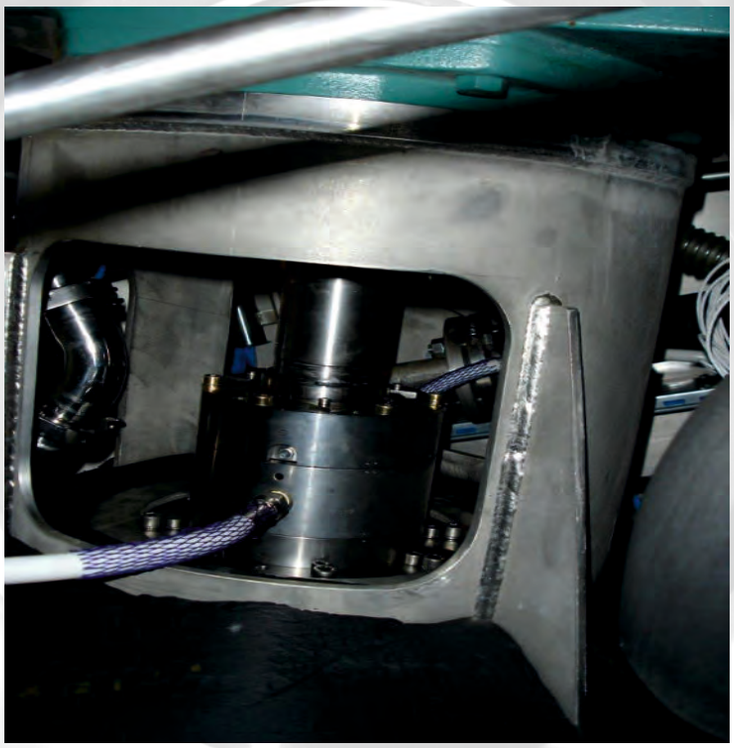

Housing mechanical seal for
Food, chemical and pharmaceutical processes
(Granulierer-Mixer-dryer from Bio-Inox Pharma®)

MSG®

MECHANICAL SEALS GERMANY

Supply systems
API

Please demand for our special brochure.

Reference energy

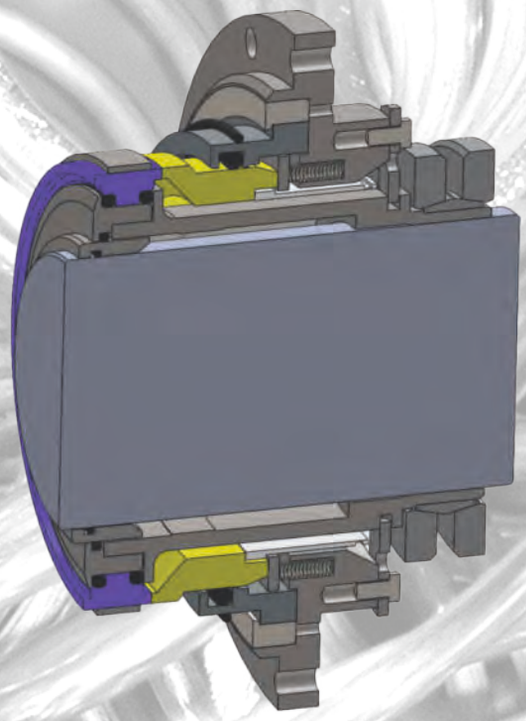

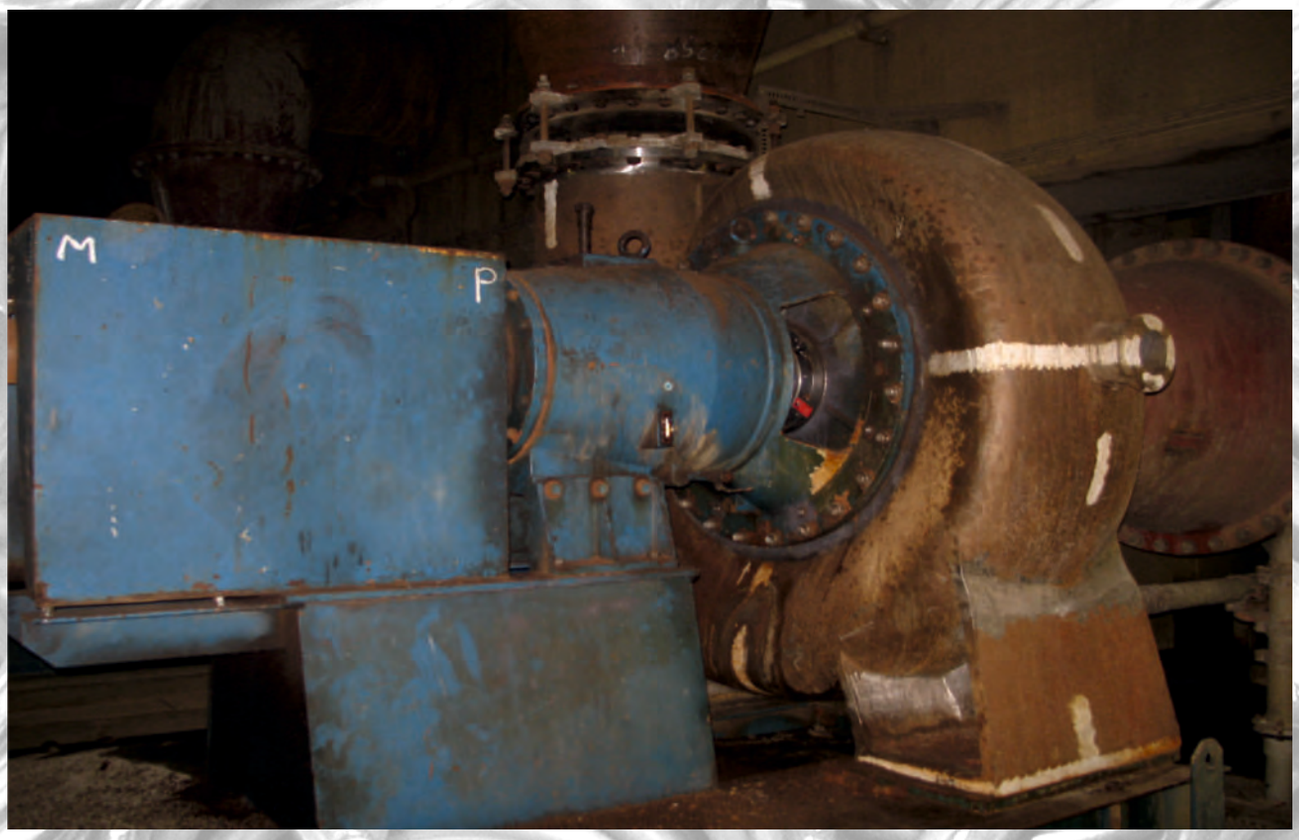

Reference
various industrial applications

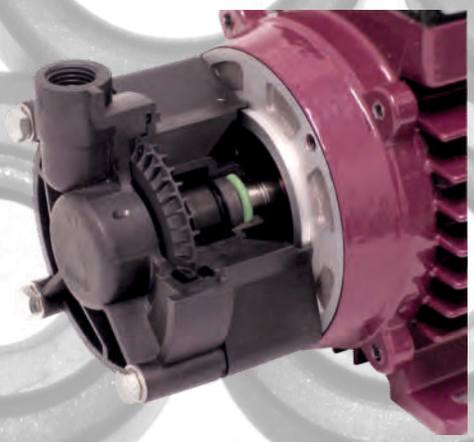

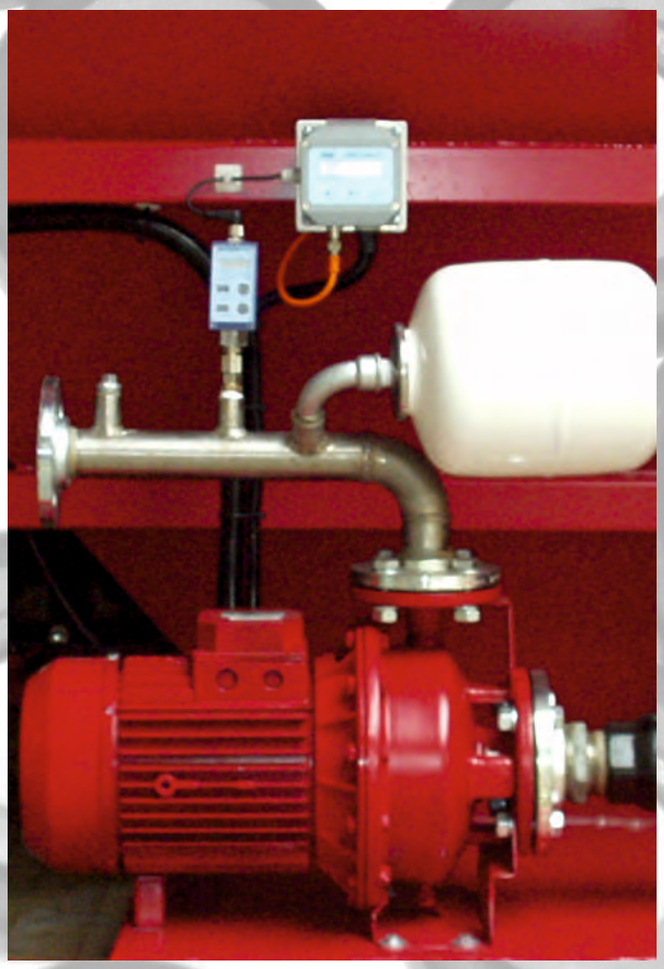

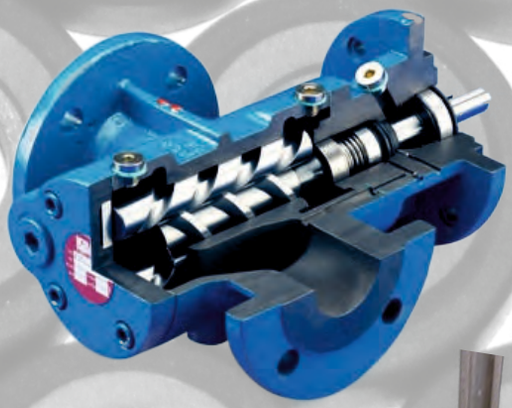

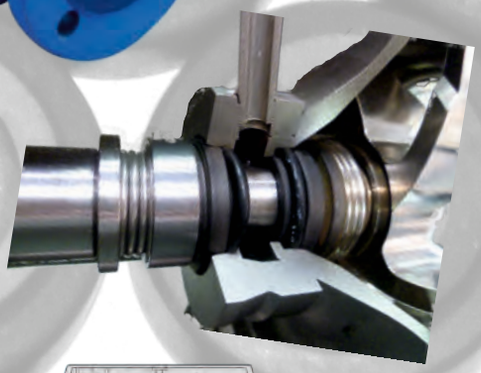

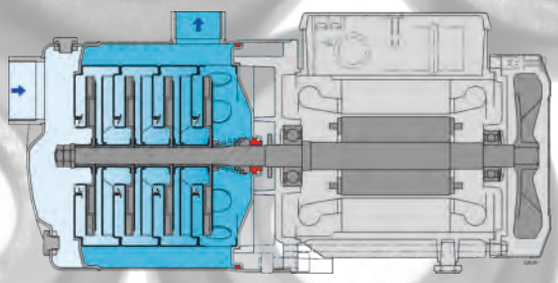

Reference
various industrial applications

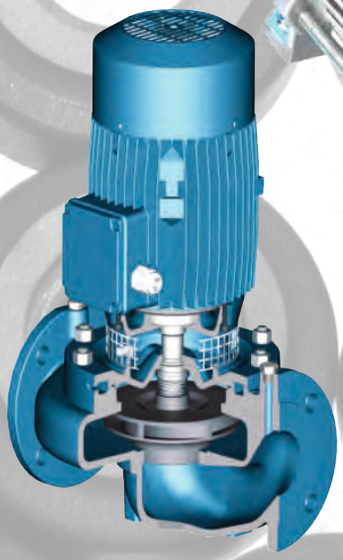

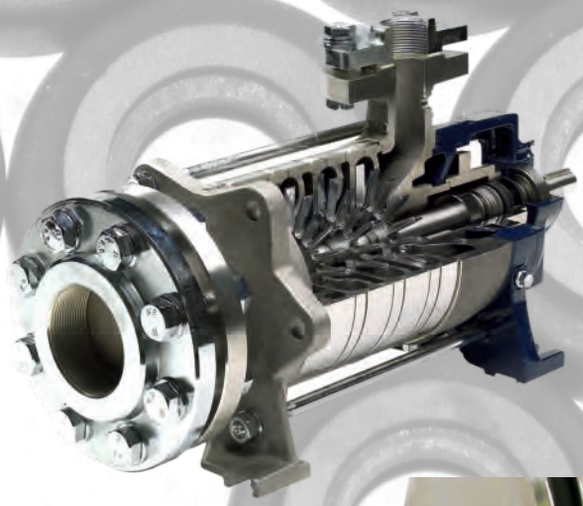

Reference water supply

Repair Service

To go further in the area of service MechanicalSealsGermany has developed its own seals repair service. This program is available for all models, all brands, all materials and all applications. The service includes: evaluation, cleaning, analysis, repairing, manufacturing and testing.

Let ’s give a new life to your seal !

Technical Informations

1. General operating conditions

a. General operating limits (look at the types)

The specified operating limits are listed as maximum values, which are not allowed to be used all at the same time, because these values can influence each other. These values are always related to the midrange diameter.

It is explicitly pointed out that a warranty is not possible, because there are too many different possibilities of applications. In exceptional cases a warranty could be arranged in cooperation with the pump producer or the pump user after test runs have been done.

Pressure operating limits for unbalanced seals, water 20ºC , n=2.9001/min

- Running surfaces steel/ carbon
- Running surfaces ceramic/ carbon
- Running surfaces TC/carbon or SiC/ carbon
- Running surfaces SiC/SiC/ or TC/ TC

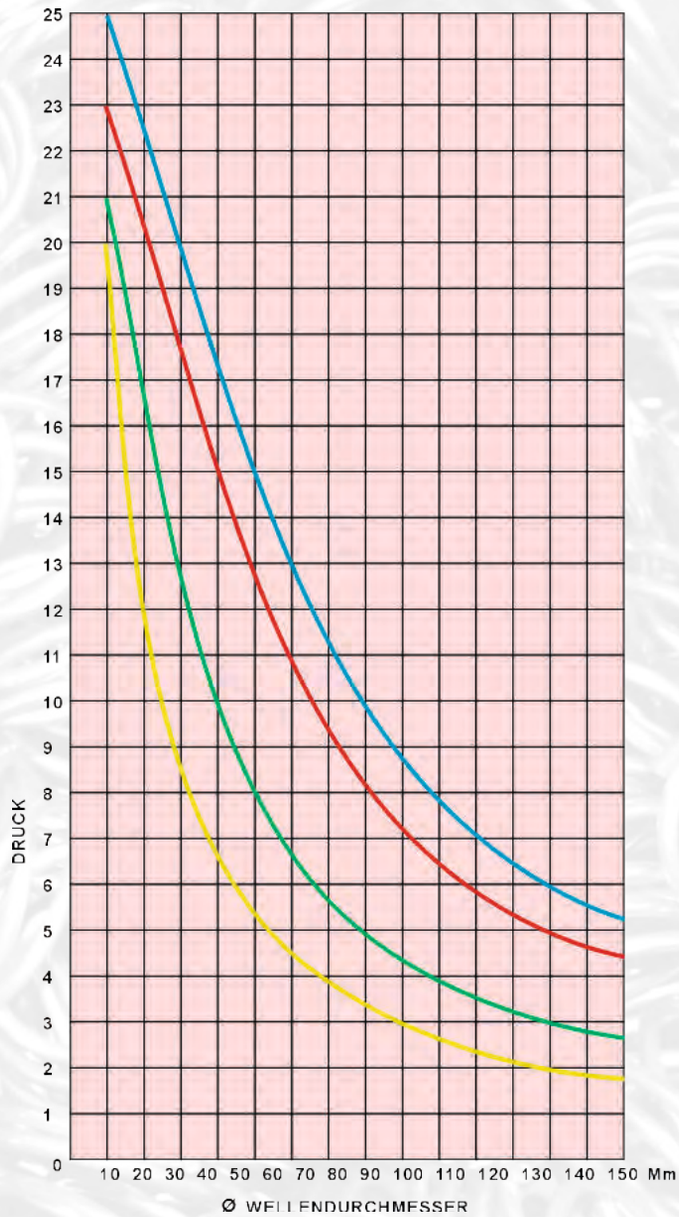

b. Functionality of fluid lubricated mechanical seals

Mechanical seals are reliable and durable seals if they are optimally adapted to the operating conditions. Mechanical seals can function well only if they can get enough fluid for lubrication and enough discharge for heat exchange.

Additionally, enough fluid should circulate around the mechanical seal. “Dead-End” applications should be avoided.

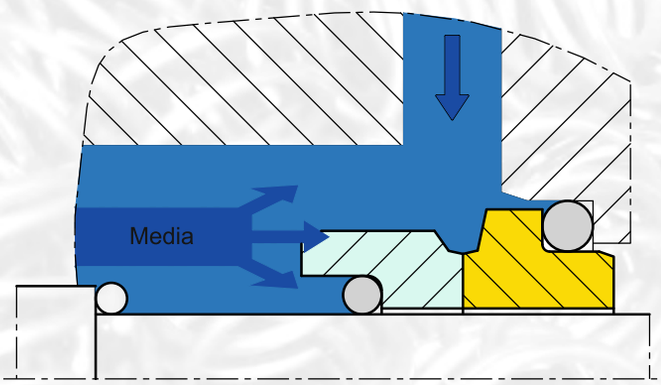

c. Design of the seal housing

It is the responsibility of the pump producer or the pump user to make sure that enough fluid is around the seal. He is also responsible for a proper venting.

Technical Informations

d. Tolerances on the shaft and in the seal houing

Concentricity of the shaft

<= D1=40mm	+/- 0,05mm
<= D1=100mm	+/- 0,08mm
D1>100mm	+/- 0,1mm

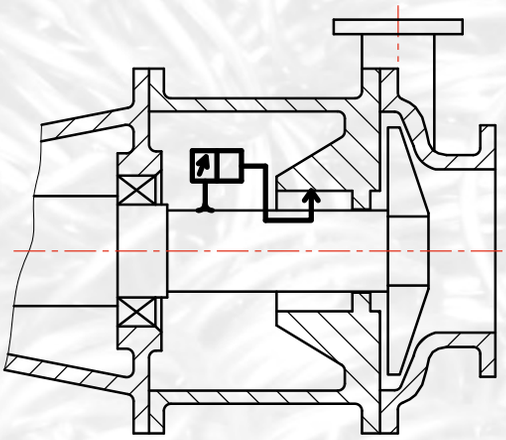

Axial movement of the shaft

<= D1=50mm	+/- 0,05mm
D1>50mm	+-0,1mm

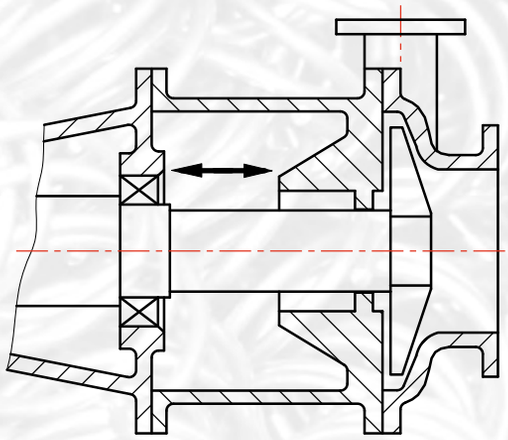

Bearing clearance

Displacment max. 0,05mm

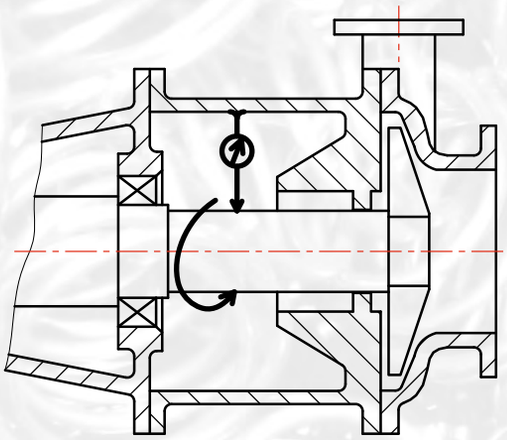

Perpendicularity housing/shaft

Max. 1°

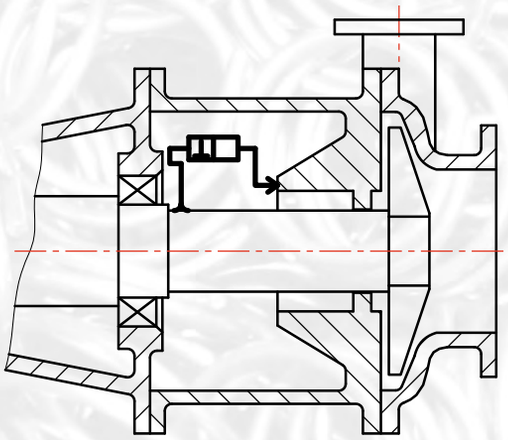

Conversion mm inch

D1	mm	inch
10	9.525	0.375
12	12.7	0.500
16	15.875	0.625
18	19.05	0.750
22	22.225	0.875
25	25.4	1.000
28	28.575	1.125
32	31.75	1.250
35	34.925	1.375
38	38.1	1.500
40	41.275	1.625
43	44.45	1.750
48	47.625	1.875
50	50.8	2.000
53	53.975	2.125

Conversion mm inch

D1	mm	inch
55	57.15	2.250
60	60.325	2.375
63	63.5	2.500
65	66.675	2.625
70	69.85	2.750
-	73.025	2.875
75	76.2	3.000
-	79.375	3.125
80	82.55	3.250
85	85.725	3.375
-	88.9	3.500
90	92.075	3.625
95	95.25	3.750
-	98.425	3.875
100	101.6	4.000

Technical Informations

e. Surface conditions of the shaft and in the housing according to EN 12756

Elastomeres

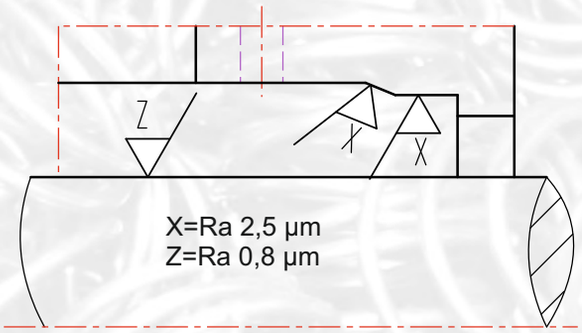

Non- ealstomeres

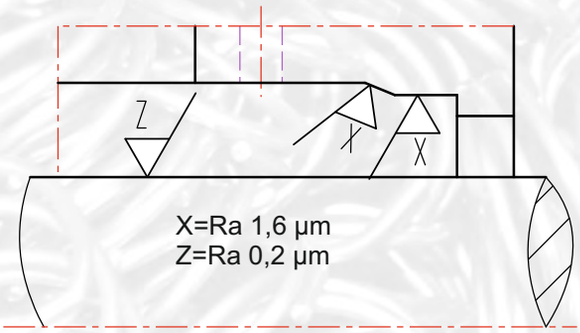

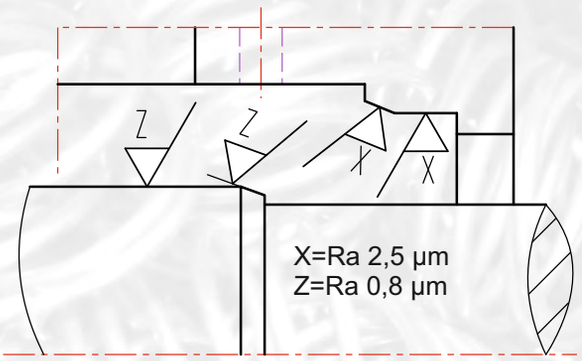

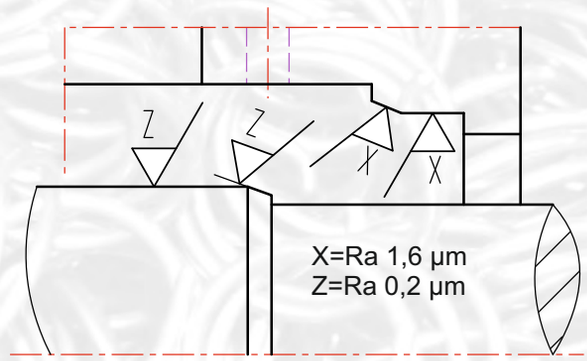

f. Axial movements

Super-sinus spring
<= D1=28mm+/- 0,5mm
<= D1=65mm+/- 1,0mm
> D1=70mm +/- 1,5mm

Conical spring
<=D1=28mm +/- 1,0mm
<= D1=65mm +/- 1,5mm
> D1=70mm +/- 2,0mm

Technical Informations

g. Different operational modes for different medias

Pure media, media with particles, sticking media, hardening media, vaporizing media, media with gas inclusions, very hot or very cold media, toxic media, aggressive media, media under vacuum, media under high pressure, …..all demand very different operational modes.

Most mechanical seals run in single acting use where the media is not able to circulate well around the mechanical seal. However, expierence has shown that a circulation is highly recommended.

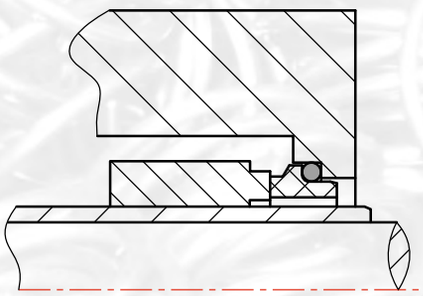

Without circulation of the media unfavorable seal chamber

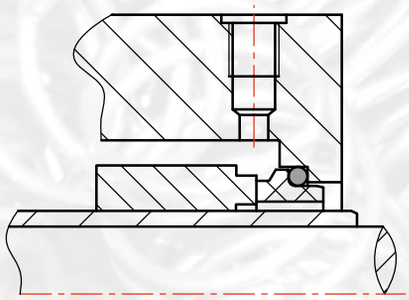

With circulation of the media

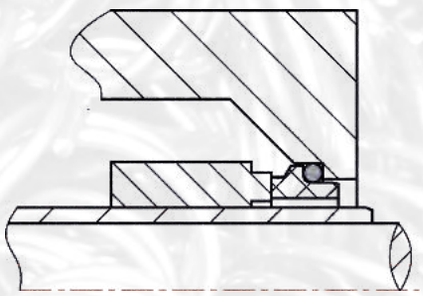

Optimal flushed seal chamber

To increase the lifetime the user should choose following modes:

Quench (pressureless),tandem use
Quenching is a pressurelss impact with an additional external fluid on the atmospheric side of the mechanical seal. It is recommend particularly for media which can cause sediments or could crystallize when they come into contact with the atmosphere (oxygen). Besides quenching is a dry running protection.

Barrier fluid (under pressure),back to back
For sticking, hot, toxic, hazardous, vaporizing,…. media the use of double acting mechanical seals is absolutely necessary. These seals must be admitted with a barrier fluid under pressure so that the barrier fluid to undertake the lubrication for both running surfaces. Pay attention to the fact that the pressure in the barrier fluid is min. 0,5bar higher than the media pressure and that the barrier fluid is media is compatible with the media.

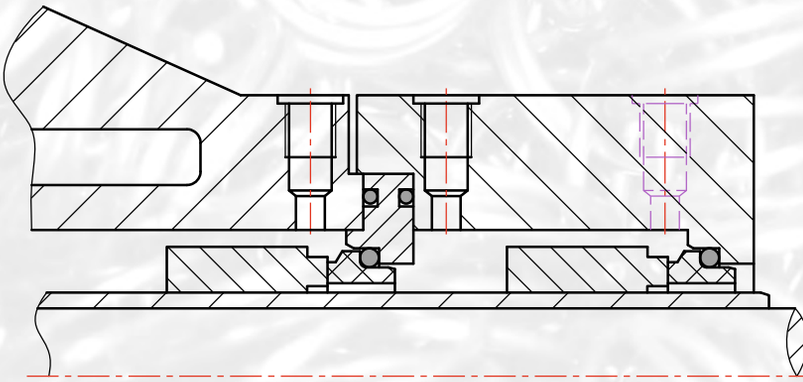

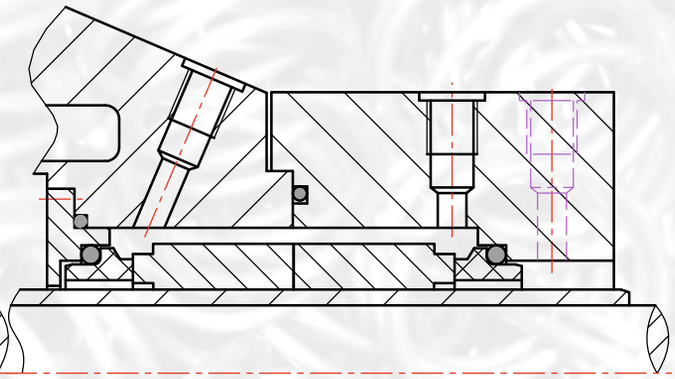

Technical Informations

2. EN 12756 (DIN 24960)

Schematic representation of a designation for single mechanical seals

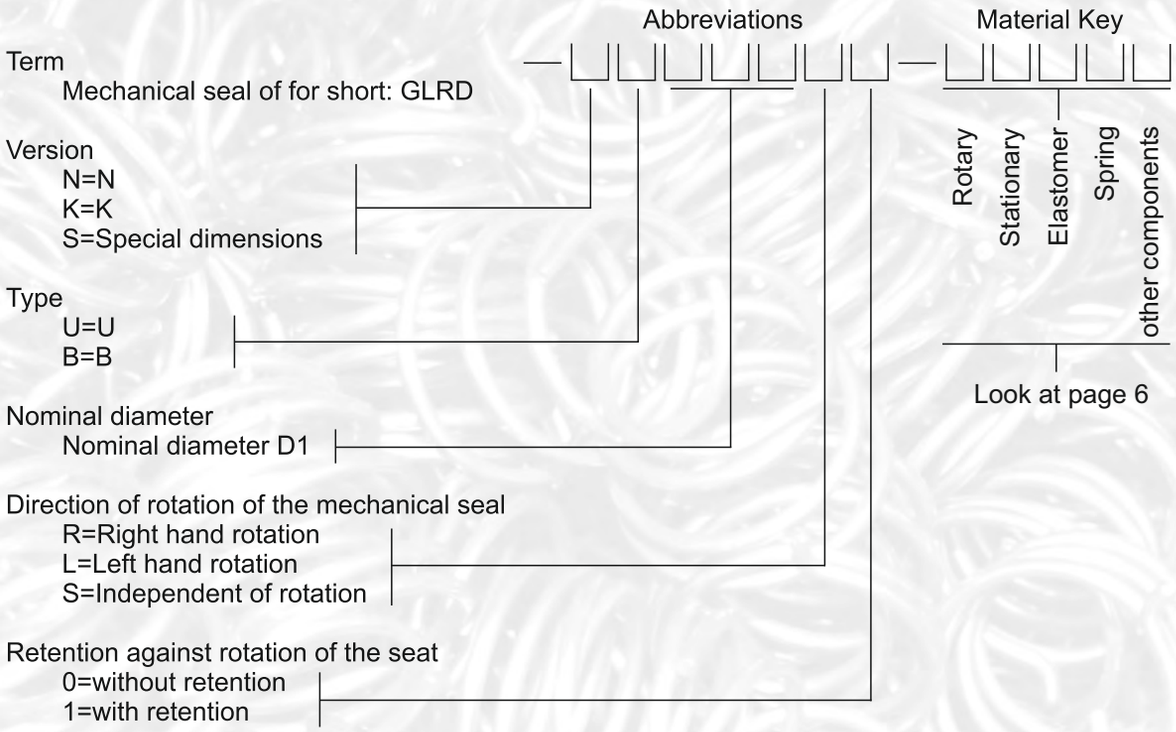

Schematic representation of designation for double working mechanical seals

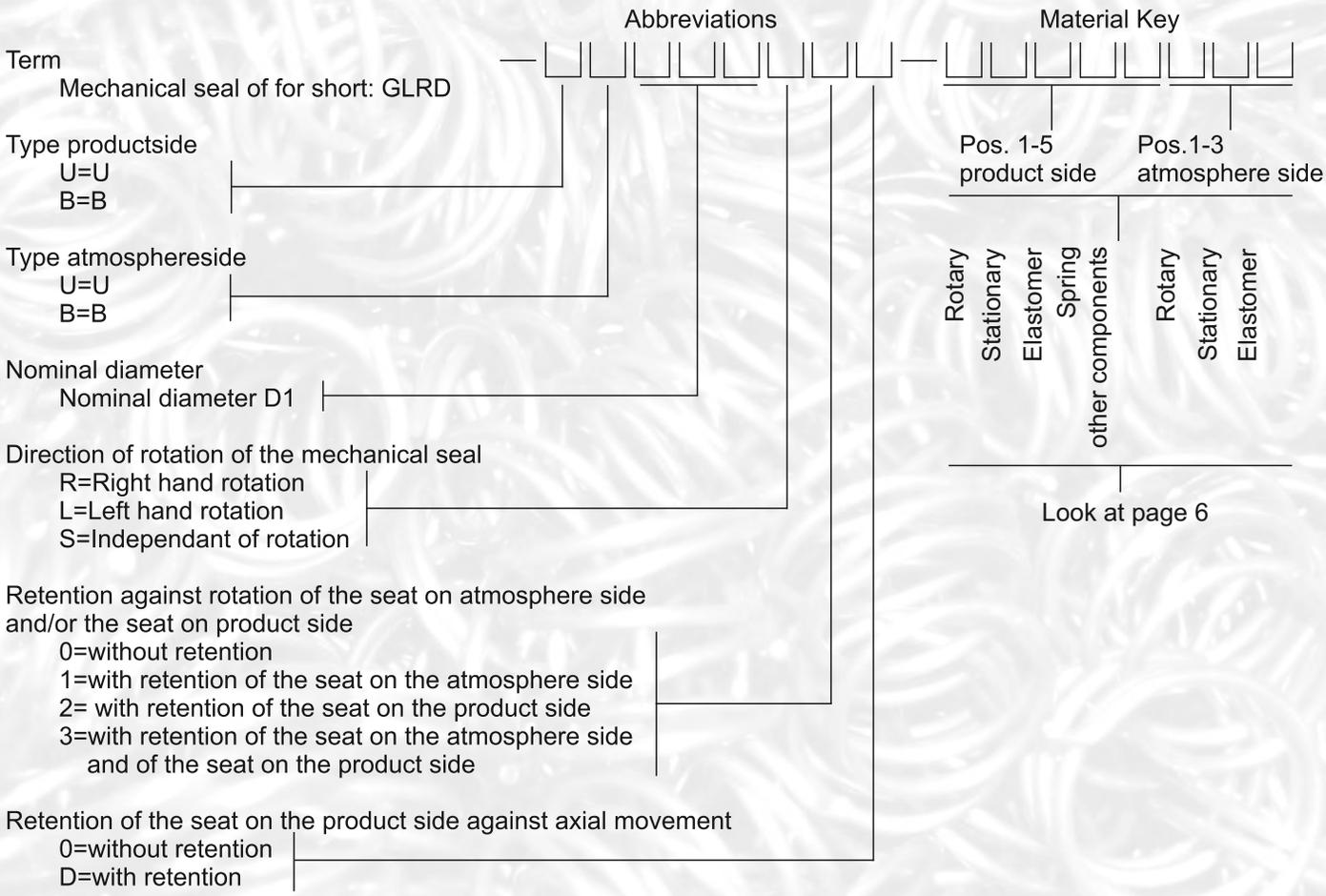

Technical Informations

3. General technic for axial mechanical seals

Seal composition

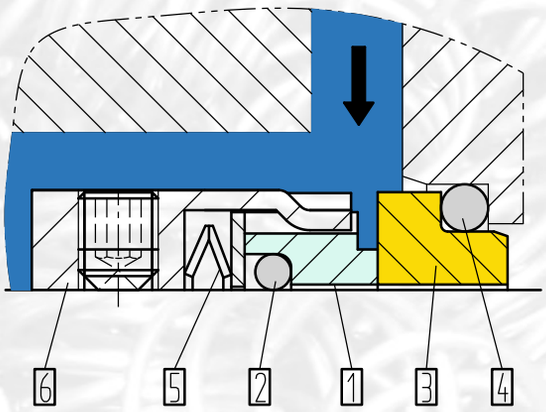

Rotary unit
- Rotating seal ring (1)
- Dynamic o-ring (2)
- Spring (5)
- Drive collar (6)

Stationary unit
- Stationary seal ring (3)
- Stattionary o-ring (4)

Example type 83K

Closing force

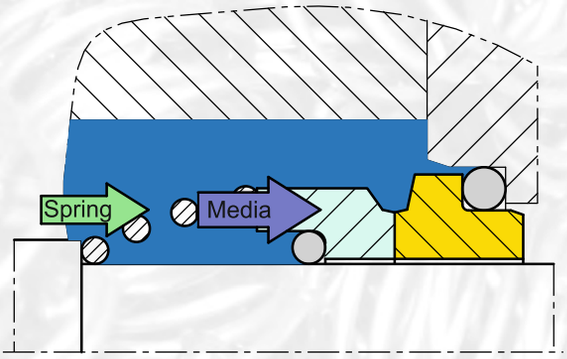

From the sealing media generated hydraulic force and the spring force

K- balancing factor

Unbalanced seals: K-factor>= 1
Example type 83K
Based on experiences K= 1,0 …2,0.

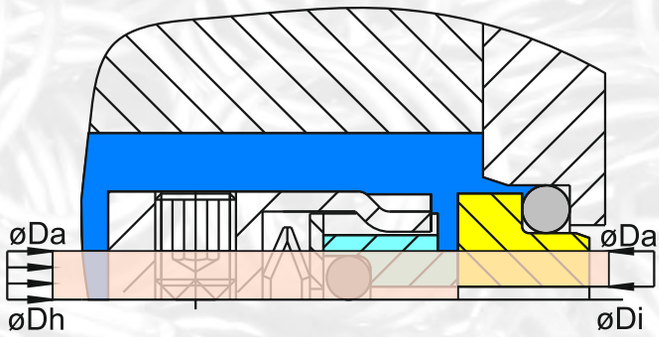

Balanced seals: K-factor< 1
Example type 83EK

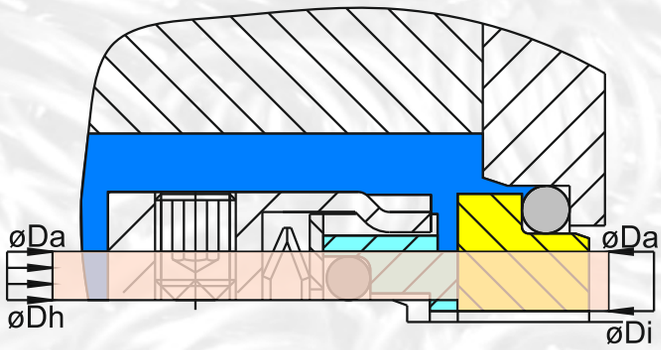

Based on experiences K= 0,6 …1. With a lower k- factor, the force on the running surfaces is reduced, therefore high pressure applications use balance seals. A too less calculated k-factor open the running surfaces.

$$K = \frac{\text{hydraulic loaded surface Ah}}{\text{running surface A}} = \frac{(Da2 - Dh2)}{(Da2 - Di2)}$$

Da= Outside diameter of the running surface (mm)
Di= Inside diameter of the running surface (mm)
Dh= Hydraulic diameter (mm)

Technical Informations

Sliding pressure pg

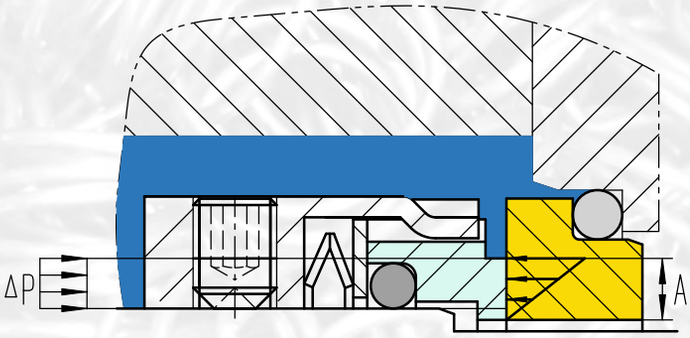

The sliding pressure pg is the force which close the running surfaces.

Pg= Δp (k-k1) +pf
Δp= Sealing pressure (bar)
K= balancing factor
K1= Sealing gap factor
Pf= Spring force

Lubrication structure, factors of influence for the leakage

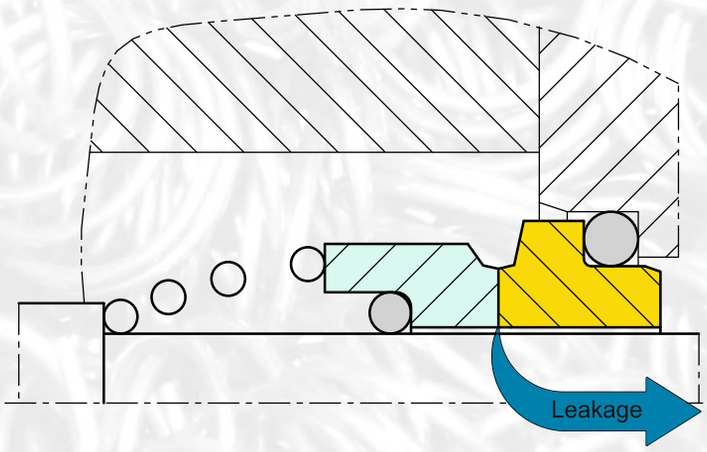

For a reliable and functional mechanical seal the lubrication film between the running surfaces is obligatory. But an unavoidable consequence of this is a minimum leakage.

Decisive for the leakage rate are the adapting gap and the friction conditions (liquid friction or boundary friction), and the sealing pressure, the seal size, the speed, the viscosity Ra roughness values and flatness of the running surfaces, running time, gap deformation (caused by thermal load), the gap pressure, ...etc.

In practise high quality, balanced seals are installed for higher pressure applications. In case another balancing factor influences the adapting gap with the effect that other leakage rates that might be lower can be reached.

Technical Informations

Processes in the sealing gap, vapour pressure, vapour curves

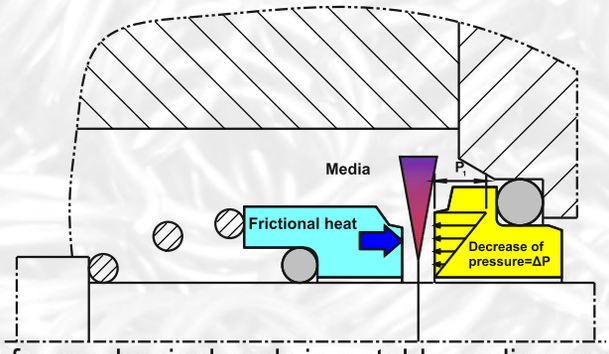

The functional requirement for mechanical seals is a stable sealing gap. Because of frictional heat and a decrease of pressure a vaporisation in the sealing gap can happen, depending on the current boiling point of the medium.

Pressure and temperature cause deformation in the sealing gap. These deformations are only a few µm but have a significant effect on the pressure progress and the lubrication film and finally the leakage rate.

If the vapour pressure is close to the media pressure there will be the risk of vaporization which can damage the mechanical seal. We recommend to keep a minimum distance of 5- 10ºC from the vapour pressure.

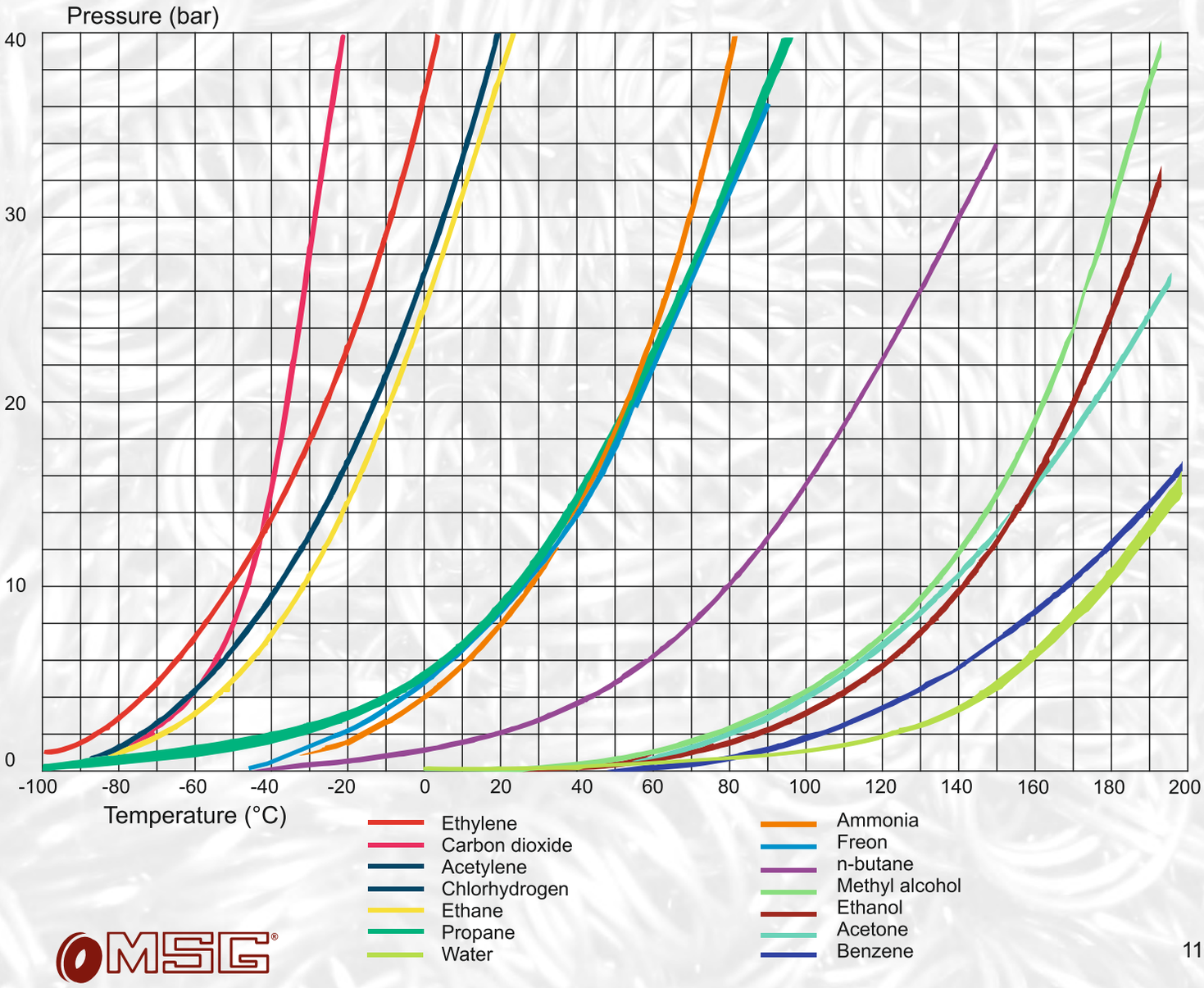

Technical Informations

Start adjustment, wear and tear

With mechanical seals a high level of wear can occur because of different interactions of the material combinations , the lubrication media and the working conditions. Because of the natural wear and tear the mechanical seal must be basically treated as a part subject to wear and tear.

During the start adjustment time the mechanical seal has a higher wear and tear due to the adjustment and equalization of the running surfaces. That process can last several hundreds hours with massive/ massive material combinations.

A distinction is made between the liquid friction, boundary friction, contact friction and dry friction. They all have a significantly different influence on the wear and tear and on the leakage rates.

Sliding velocity v, p*v value

In addition to pressure p, temperature t and the sliding velocity v there is another operating limit which is the loading/speed value p (bar) * v (m/s), because it is not allowed to use the maximum of p and v at the same time.

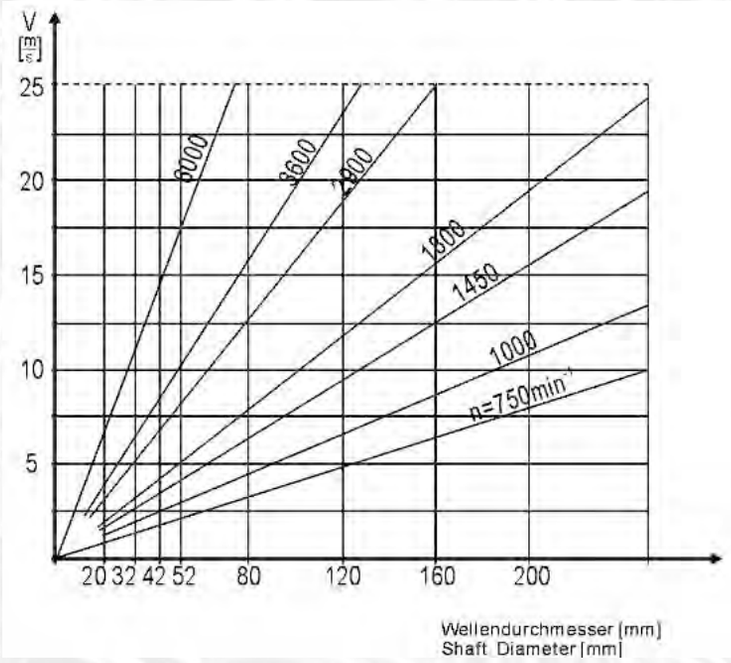

Friction (power absorption)

Pr= pg * v * A * f (W)

Pg= Sliding pressure (bar)
v= Sliding velocity (m/s)
A= Running surface area (mm2)
f= Coefficient of friction 0,08

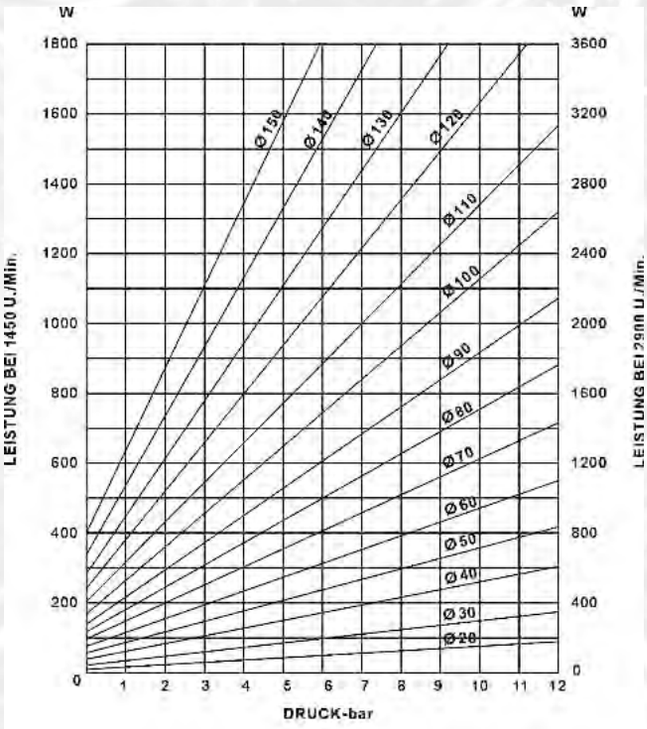

The figures of the absorbed power can be taken approximately from the diagram.
They refer to:

Single mechanical seals
Running surfaces steel/ carbon
t=20°C with water

correction coefficient

SiC/carbon, ceramic/carbon, TC/carbon *0,9
SIC/SIC, TC/TC *2,5

Technical Informations

Rotation selection of self driving spring

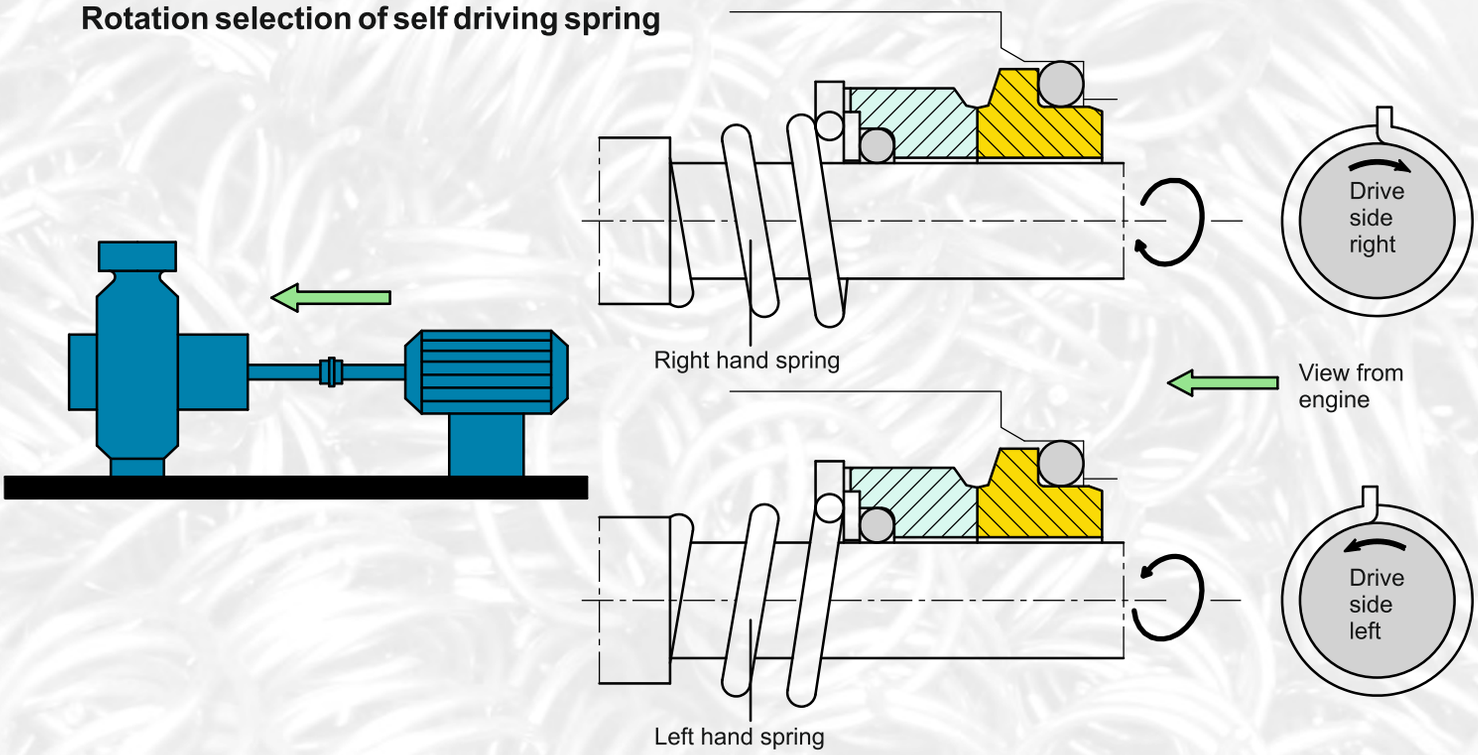

Mechanical seals with conical self driving springs are dependent on rotation, that is right or left rotation. Before the start up procedure the sense of direction must be checked in order to make sure that the seal and the pump will not be damaged.

Rotation selection of pumping screw

Mechanical seals with pumping screws are dependent on rotation, that is right or left rotation.

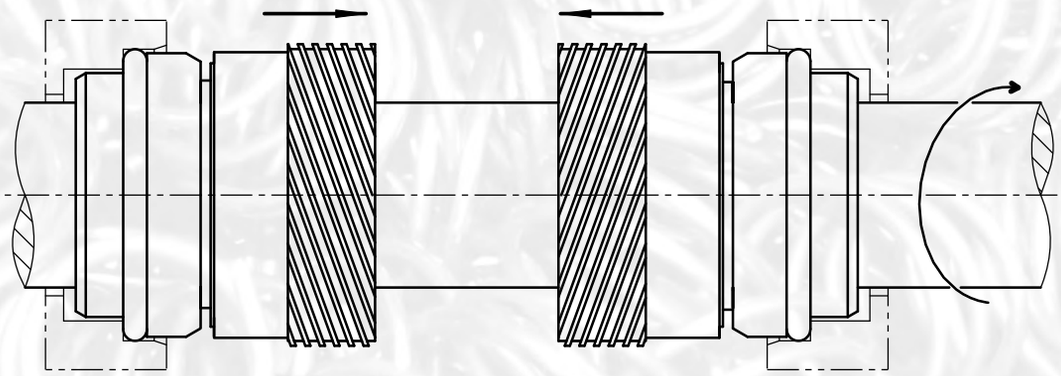

Pumping screw RIGHT and LEFT, drive side right

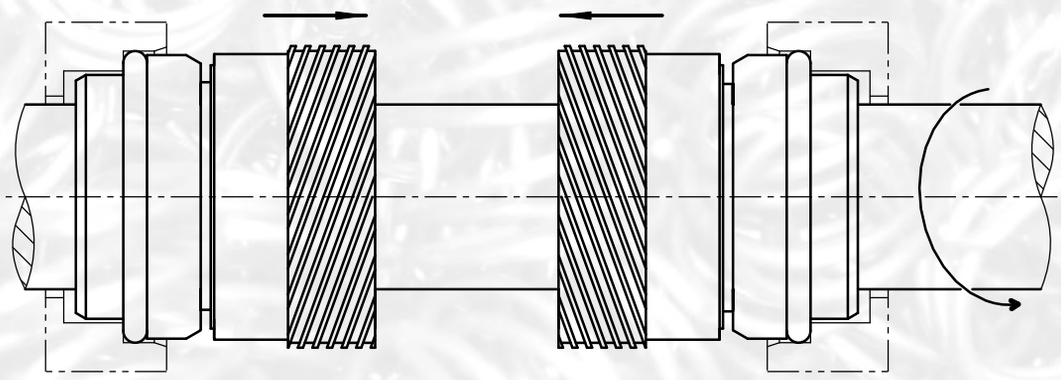

Pumping screw LEFT and RIGHT, drive side left

Technical Informations

Barrier fluid system, thermosiphon circulation

In order to fulfil the function of double working mechanical seals the housing of the barrier fluid (space around the double seal, between the product and atmospheric side) must be charged with the barrier fluid which has to be media compatible. The system builds up a pressure on the barrier fluid medium which must be higher than the pressure in the medium (min. 0,5 -1 bar). In addition to that the system has to compensate the leakage and to cool the barrier fluid medium.

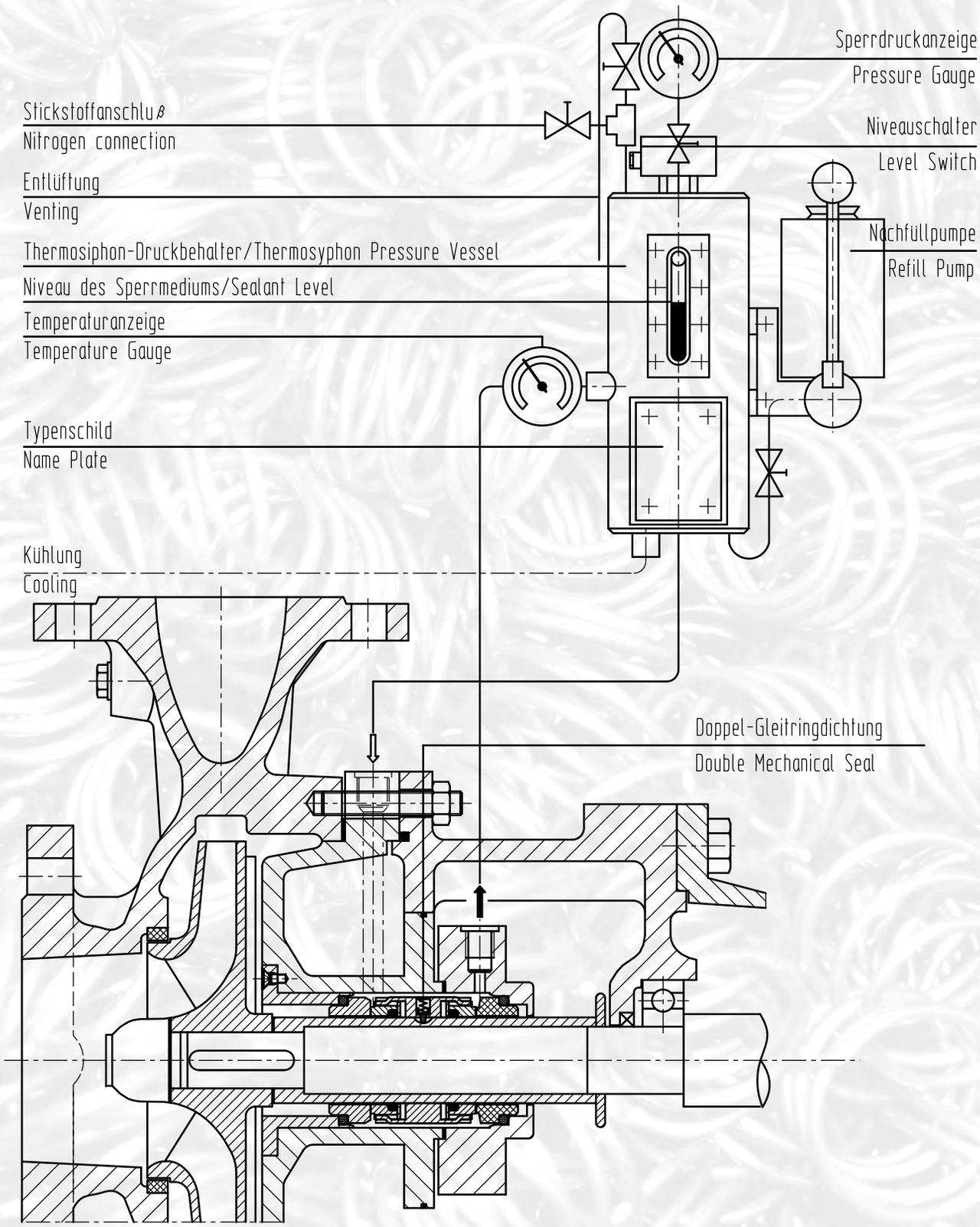

Technical Informations

Torque transmission

Conical spring, torque by friction (like types: 1, 2, 3, ….)
Elastomer bellow seals, torque by traction (like types: L3, L4, L5, ….)
Setscrew according to DIN 916 by tight fit (like types: 82, 83, 84, ….)

Other torque transmission systems:

By Key

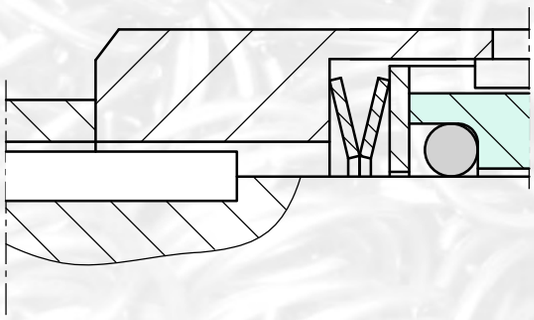

Set crew with conepoints DIN914

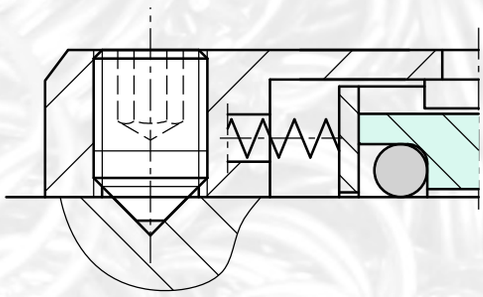

Angeled spings

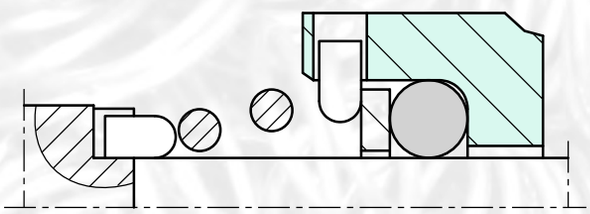

Sping loaded drive pin

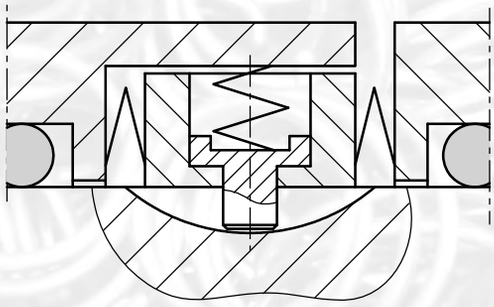

Viscosity

Water is the fluid which is pumped most often but oils, glycols and fuels are also very common. These fluids, however, have other densities and viscosities. The viscosity is the measure of the toughness of the fluid. Additionally it has to be noticed that the viscosity depends on the temperature which means that hot oil for example is less viscous than cold oil.

We consider the kinematic viscosity (cst):

Fuel	0,75 cst	at 20ºC
Water	1,0 cst	at 20ºC
Olive oil	95 cst	at 20ºC
Lubricating oil	200 cst	at 20ºC
Heavy oil	1.000 cst	at 20ºC
Heavy oil	400 cst	at 120ºC
Printing colour	2.500 cst	at 40ºC
Cocoa paste	4.000 cst	at 20ºC

We recommend to use double working mechanical seals starting from a kinematic viscosity over 2.000 cst, because there will not be sufficient lubrication between the running surfaces.

Technical Informations

Stationary seat protection, retaining system

The operating safety for double working mechanical seals will be ensured if the stationary is locked in order to avoid axial movement. Mainly in case of barrier fluid system failure the pressure of the medium will push the stationary out of the seat housing.
To avoid an opening of the rotary, we recommend the usage of our types 7K, 7EK, 74 and L20 because they can work against the pressure.

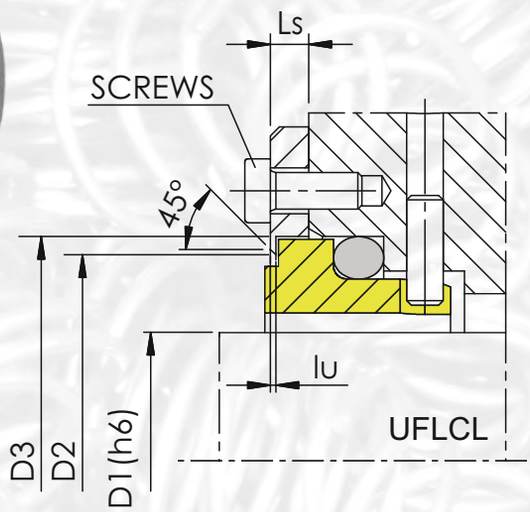

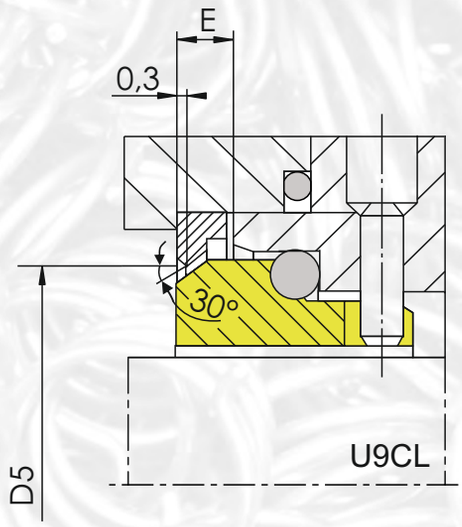

Special stationary types on reques:

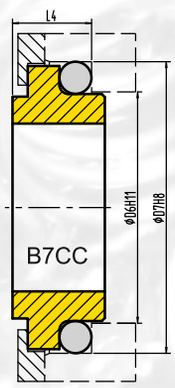

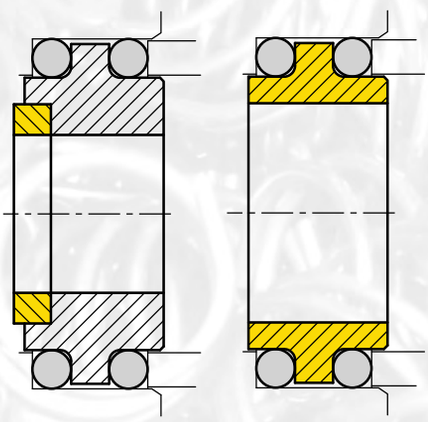

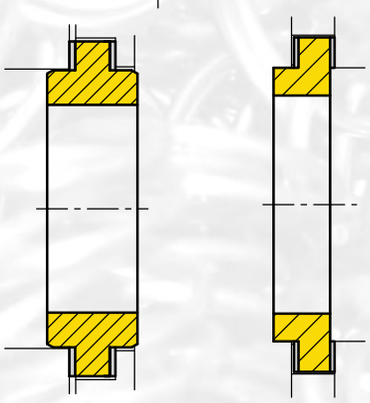

EN 2756				UFLCL	U9CL	
D1	**D2**	**D3**	**ls**	**lu**	**D5**	**E**
10	18	21	1.2	0.6	-	4
12	20	23	1.2	0.6	-	4
14	22	25	1.2	0.6	-	4
16	23	27	1.2	0.6	-	4
18	29	33	2.5	0.6	31.2	4
20	31	35	2.5	0.6	33.2	4
22	33	37	2.5	0.6	35.2	4
24	35	39	2.5	0.6	37.2	4
25	36	40	2.5	0.6	38.2	4
28	39	43	2.5	0.6	41.2	4
30	41	45	2.5	0.6	43.2	4
32	44	48	2.5	0.6	46.2	4
33	44	48	2.5	0.6	46.2	4
35	46	50	2.5	0.6	48.2	4
38	52	56	4.2	0.6	53.5	6
40	54	58	4.2	0.6	55.5	6
43	57	61	4.2	0.6	58.5	6
45	59	63	4.2	0.6	60.5	6
48	62	66	4.8	0.7	63.5	6
50	66	70	4.8	0.7	67.5	6
53	69	73	4.8	0.7	70.6	6
55	71	75	4.8	0.7	72.6	6
58	74	78	4.8	0.7	75.6	6
60	76	80	4.8	0.7	77.6	6
63	79	83	4.8	0.7	80.6	6
65	81	85	4.8	0.7	82.6	6
68	86	90	5.5	0.7	88.6	6
70	88	92	5.5	0.7	90.2	6
75	93	97	5.5	0.7	95.2	6
80	101	105	7	0.8	103	6
85	106	110	7	0.8	108	6
90	111	115	7	0.8	113	6
95	116	120	7	0.8	117.5	6
100	121	125	7	0.8	122.5	6

Technical Informations

4. Material data

Material carbon graphite		A10 A12	B10 B12	C10 C12
Characteristic	UNIT			
Density	[g/cm³]	2,3	1,8	1,7
Hardness (Shore)	[GPa]	79	77	75
Compressive strength	[N/mm²]	250	200	180
Flexural strength	[MPa]	55	67	60
Thermal expansion (till 100ºC)	[$10^{-6}K^{-1}$]	4	4,5	4
Thermal conductivity (till 100ºC)	[$W/m^{-1}K^{-1}$]	21	10	12
Modulus of elasticity	[GPa]	22	18	15

Material ceramic		V10 V20
Characteristic	UNIT	
Density	[g/cm³]	3,9
Hardness HV	[GPa]	2200
Compressive strength	[MPa]	2800
Flexural strength	[MPa]	350
Thermal expansion (till 100ºC)	[$10^{-6}K^{-1}$]	5,2
Thermal conductivity (till 100ºC)	[$W/m^{-1}K^{-1}$]	35
Modulus of elasticity	[GPa]	380

Material tungsten carbides		U10 U11 U12	U20 U21 U22	U30 U31 U32
Characteristic	UNIT			
Density	[g/cm³]	14,4	14,9	14,5
Hardness HV30	[GPa]	1600	1500	1200
Compressive strength	[MPa]	5000	4000	3500
Flexural strength	[MPa]	1600	1400	1400
Thermal expansion (till 100ºC)	[$10^{-6}K^{-1}$]	6	7	8
Thermal conductivity (till 100ºC)	[$W/m^{-1}K^{-1}$]	45	40	40
Modulus of elasticity	[GPa]	540	610	560

Material silicon carbides		Q10 Q12	Q20 Q22
Characteristic	UNIT		
Density	[g/cm³]	3,1	3
Hardness (Shore)	[GPa]	2600	2000
Compressive strength	[MPa]	2500	2200
Flexural strength	[MPa]	450	350
Thermal expansion (till 100ºC)	[$10^{-6}K^{-1}$]	4,2	4
Thermal conductivity (till 100ºC)	[$W/m^{-1}K^{-1}$]	100	110
Modulus of elasticity	[GPa]	410	400

According to manufacturer 's data, no limit or warranty

Technical Informations

5. Mounting operations

During mounting operations you have to pay extreme attention to cleanliness and dimensional stability. The running surfaces are not allowed to be moistened in any case, must be done in an absolutely dry condition. Any dirt or dust and damage on the surfaces have to be avoided.

Mounting operation of the stationary part

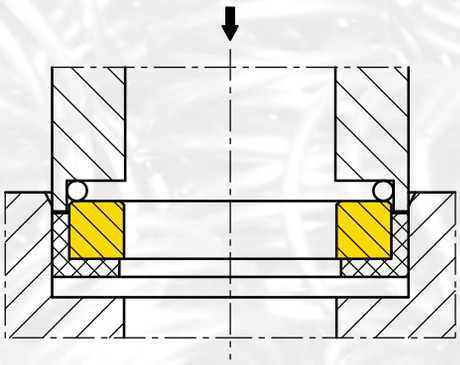

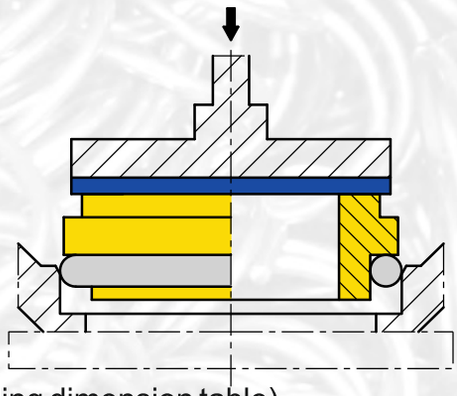

- The D7 (H8) sizes have to be respected. (See corresponding dimension table)
- The stationary seat and its rounded edges must be properly clean and must not show any machine marks.
- For easy mounting slightly moisten the seat housing and the outside diameter of the stationary part with alcohol or another elastomer compatible liquid. Do not use grease.
- Protect the running surfaces and pay attention to a regular pressure distribution.
- During mounting we recommend to use a tool. When you use it take care that the running surface is protected with a plastic disk or and o-ring

Mounting operation of rotary part

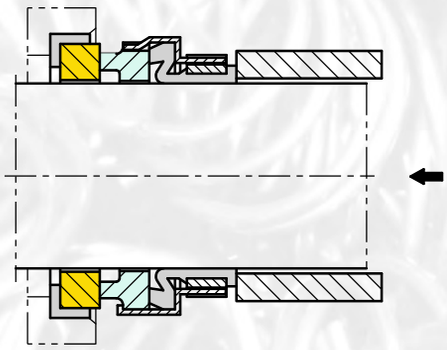

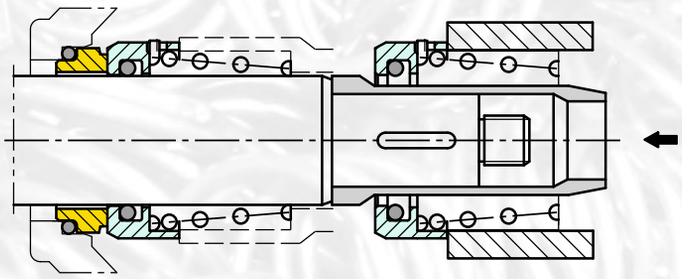

- Make sure that the shaft is smooth, clean and without sharp edges.
- For easy mounting of the rotary part of o-ring mechanical slightly moisten the shaft with alcohol or another elastomer compatible liquid. Do not use grease.
- For easy mounting of the rotary part of elastomere bellow seals moisten the shaft well with soapy water. Do not use grease.
- Metal bellow seals are not allowed to be pressed on block.
- For mechanical sals with set screws we recommend to use a screwlock (for example: Loctite ®).

Mounting operation of double wrapped PTFE o-rings

The installation position of double wrapped PTFE o-rings is of essential importance. The outside jackets have to be mounted contrary to the mounting direction so that the jacket will not be ruptured or removed.

Technical Informations

6. Circulations systems according to API610

01

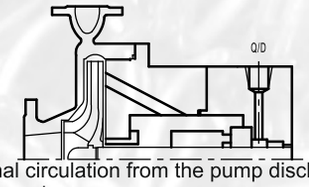

Internal circulation from the pump discharge to the seal

02

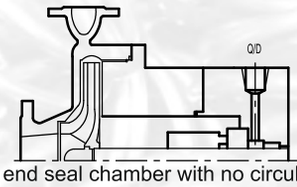

Dead end seal chamber with no circulatio. Stuffing box cooling and a neck bucsh are necessary, unless otherwise specified.

11

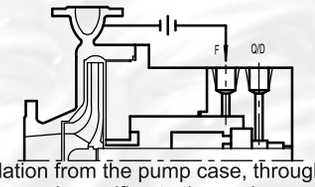

Circulation from the pump case, through a strainer and an orifice to the seal.

12

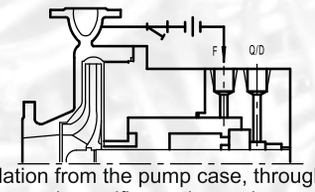

Circulation from the pump case, through a strainer and an orifice to the seal.

13

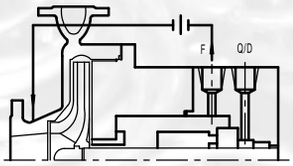

Circulation from the seal chamber, through an orifice and back to pump suction.

14

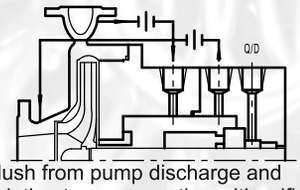

Seal flush from pump discharge and recirculation to pump suction with orifices.

21

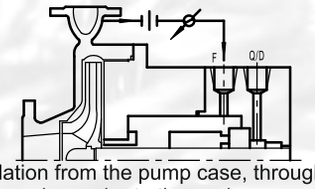

Circulation from the pump case, through an orifice and a cooler to the seal.

22

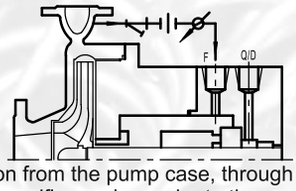

Circulation from the pump case, through a stainer, an orifice and a cooler to the seal.

23

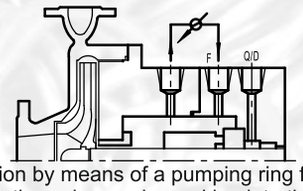

Circulation by means of a pumping ring from the seal, through a cooler and back to the seal.

31

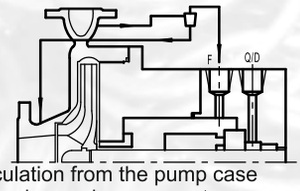

Circulation from the pump case through a cyclone separator.

32

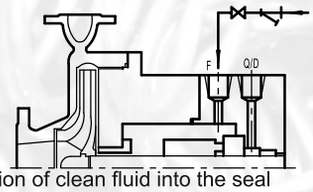

Injection of clean fluid into the seal chamber from an external source.

41

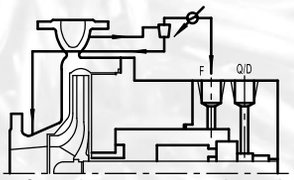

Circulation from the pump case through a cyclone separator, and clean fluid through a cooler to the seal.

51

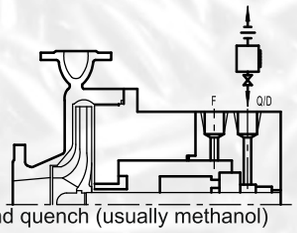

Dead-end quench (usually methanol)

52

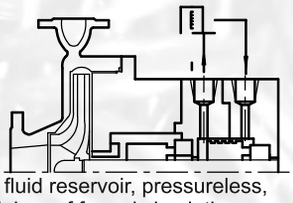

External fluid reservoir, pressureless, thermosiphon of forced circulation as required.

53A

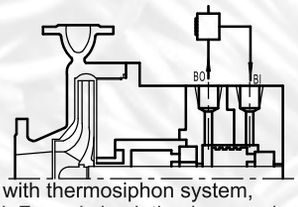

Circulation with thermosiphon system, pressurized. Forced circulation by pumping ring or circulation pump.

53B

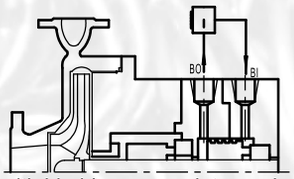

Circulation with bladder accumulator and cooler, pressurized. Forced circulation by pumping ring or circulation pump.

53C

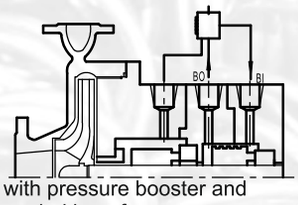

Circulation with pressure booster and cooler. Pressuried by reference pressure of seal chamber. Forced circulation by pumping ring or circulation pump.

54

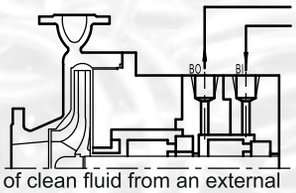

Circulation of clean fluid from an external system.

61

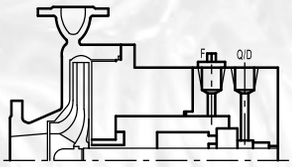

Tapped connections for the customer 's use.

62

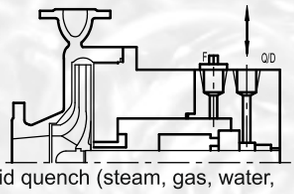

External fluid quench (steam, gas, water, etc.).

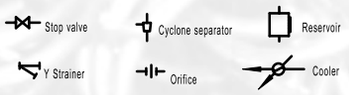

D-Quench/Barrier fluid OUT
F-Flushing inlet
Q-Quench/Barrier fluid IN

7. Typical damages to mechanical seals

Blistering occur on carbons that are impregnated with resign by means of thermal overload, for example during dry running/ less lubrication conditions. Because of occurring friction heat the resin liquefies and blasts little graphite particles out of the running surface.

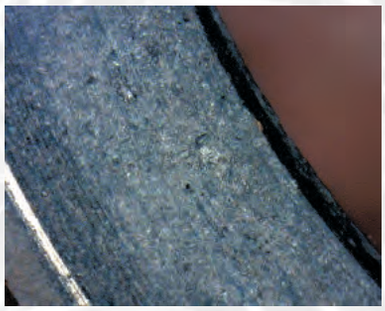

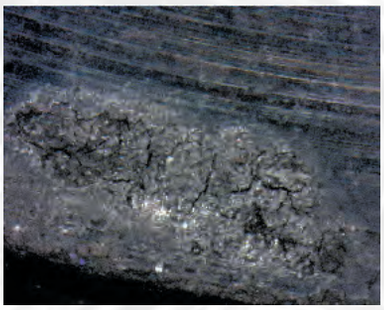

Thermal chock crackes on ceramics caused by big temperature differences. This usually happens after previous dry running/ less lubrication conditions and when the seal is flushed afterwards with cooler media.

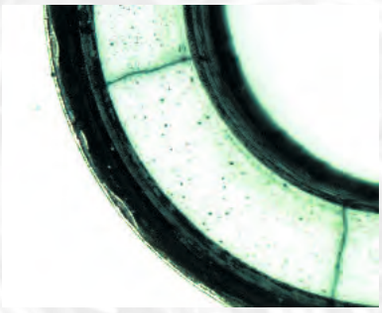

Thermal chock crackes on tungsten carbide because of strong overheating during dry running/ less lubrication conditions and quick cooling afterwards.

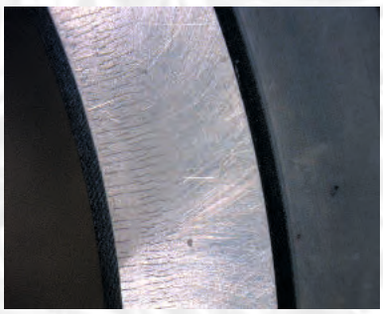

Sediments, mainly on the atmosphere side. Resulting debris after vaporization of leakage close to the shaft as well as sediments from crystallizations can be also responsible for the blocking of the rotary part.

Technical Informations

Torque damagement, as result of frequent starts and stops or direction changes of the pump.

Wear and tear because of abrasion, caused by a medium with solids inside.

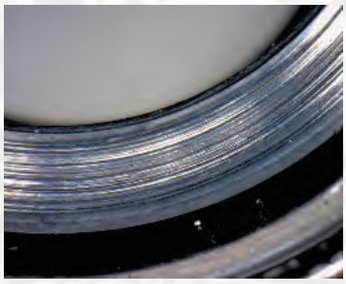

Breaks on the seal rings mainly occur on recalcitrant materials like silicon carbides, ceramics and carbons. The breakages are located mostly on the positions of torque transmission system. Among other reasons this can be caused by mounting failures, pressure bursts, cavitation, dry running/ less lubrication conditions and so on.

Torque damage particularly on bellow mechanical seals (elastomer or metall bellows). This damage is mainly caused by sticking media and adhesions of the surfaces.

Breaks on the surfaces mainly occur on recalcitrant materials, caused by dry running/ less lubrication conditions, cavitation, vaporisation in the sealing gap.

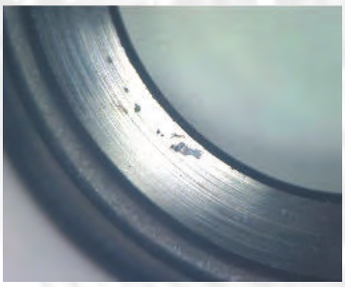

Technical Informations

Examples of elastomer damage

Extrusion caused by excessive gaps, too soft materials, too high pressure.

Embrittlement caused by thermal overheating as a consequence of dry running / less lubrication conditions.

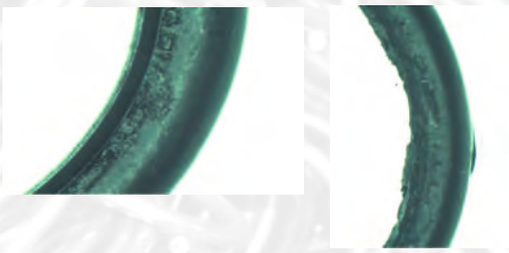

Embrittlement caused by environmental influences like light and ozone.

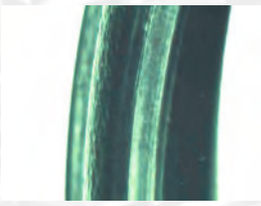

Chemical instability like EPDM in conatct with synthetic oil.

8. ATEX Explosion protection

Our mechanical seal types are marketed as machine elements for general technical purposes and are not devices or components in the sense of the directive 2014/34/EU.

A required suitability test, with regard to explosion protection for the intended temperature class, must be carried out by the machine manufacturer or operator in the conformity assessment procedure of the respective device.

To determine the expected surface temperature under the specific operating conditions, please request our diagrams.

It is imperative to ensure that the application limits of the respective mechanical seal are not exceeded and that the mechanical seal is installed and operated correctly. In addition, the entire power consumption of the mechanical seal (e.g. frictional heat, heat input from the medium to be sealed) must be safely dissipated to the medium to be sealed or the quench/ barrier medium by means of suitable measures. Insufficient heat dissipation and / or insufficient lubrication of the seal faces (e.g. in case of dry running) will lead to a possibly inadmissible temperature increase (danger of ignition) at the mechanical seal, which may cause a failure of the mechanical seal.

MSG Dichtungswerk GmbH has carried out an exemplary conformity assessment procedure on a fictitious application, taking into account Directive 2014/34/EU, as well as corresponding harmonized standards. This fictitious application would have achieved conformity with the explosion protection level below:

II 2G Ex h TX Gb

Technical Informations

9. Specification sheet - ANSWER, info@msgermany.de

Equipment

Model/ manufacture of the pump/ mixer _____

Speed (1/min) _____

Rotation selection, as seen from drive side _____

Pressure (bar) _____

Flushing system available □yes □no

Barrier / quench system available □yes □no

Media

Kind of medium _____

Density _____

Viscosity _____

Temperature _____

Abrasive □yes □no

Sealing

Previous model if know _____

Please complete following technical specifications and mark which installation variation you need:

Seal housing

D1	mm	inch
D2	mm	inch
D3	mm	inch
D4	mm	inch
D6	mm	inch
D7	mm	inch
L1	mm	inch
L2	mm	inch
L3	mm	inch
L4	mm	inch

Unbalanced

Balanced

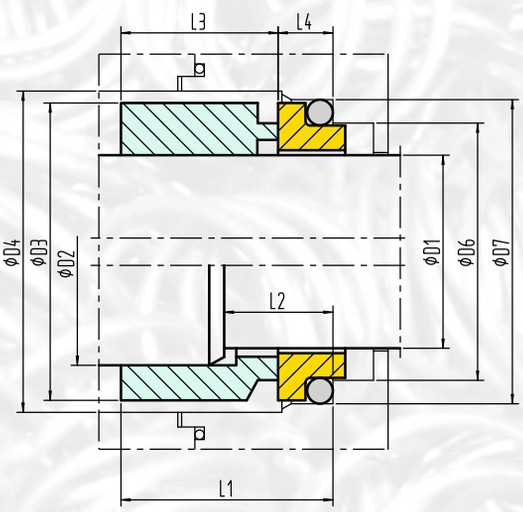

Stuffind box housing

Ø Dw	mm	inch
Ø D1	mm	inch
Ø D2	mm	inch
Ø D3	mm	inch
Ø D8	mm	inch
L	mm	inch
L1	mm	inch
L2	mm	inch

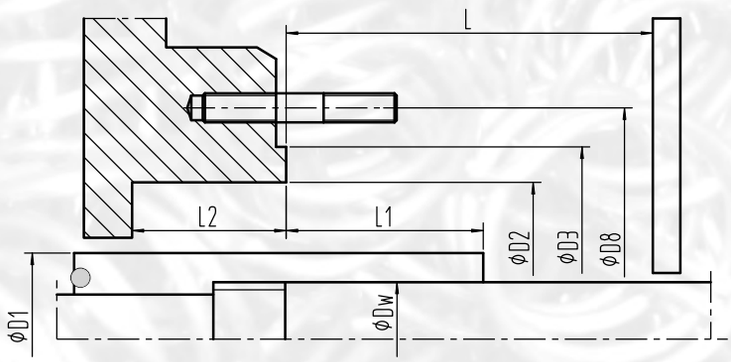

MSG®
MECHANICAL SEALS GERMANY

MSG Dichtungswerk GmbH
Industriestraße 10
D-35325 Mücke / Nieder-Ohmen
GERMANY
Tel. : +49 (0)6400 95736-0
Fax : +49(0)6400 95736-21
Email : info@msgermany.de
Website : www.msgermany.de