Hallite

Tension Advanced Sealing Technologies

www.hallite.com

Vee pack sets

Hallite

07

TECHNICAL DETAILS

METRIC ○ — INCH ●

OPERATING CONDITIONS

MAXIMUM SPEED	0.5 m/sec	1.5 ft/sec
TEMPERATURE RANGE	-30°C + 100°C	-22°F + 212°F
MAXIMUM PRESSURE	700 bar	10,000 p.s.i.

MAXIMUM EXTRUSION GAP

Figures show the maximum permissible gap all on one side using minimum rod Ø and maximum clearance Ø.

PRESSURE bar	160	250	400	700
MAXIMUM GAP mm	0.4	0.3	0.2	0.1
PRESSURE p.s.i.	2400	3750	6000	10,000
MAXIMUM GAP in	0.016	0.012	0.008	0.004

SURFACE ROUGHNESS

	µmRa	µmRt	µin CLA	µinRMS
DYNAMIC SEALING FACE $Ød_1$	0.1 ↔ 0.4	4 max	4 ↔ 16	5 ↔ 18
STATIC SEALING FACE $ØD_1$	1.6 max	10 max	63 max	70 max
STATIC HOUSING FACES L_1	3.2 max	16 max	125 max	140 max

CHAMFERS & RADII

GROOVE SECTION ≤ S mm	7.5	10.0	12.5	15.0
MIN CHAMFER C mm	4.0	5.0	6.5	7.5
MAX FILLET RAD r_2 mm	0.8	0.8	0.8	1.6
GROOVE SECTION ≤ S in	0.250	0.312	0.375	0.500
MIN CHAMFER C in	0.125	0.156	0.187	0.250
MAX FILLET RAD r_2 in	0.031	0.031	0.031	0.031

TOLERANCES

$Ød_1$	$ØD_1$	L_1 mm	L_1 in
f9	Js11	+0.25 -0	+0.010 -0

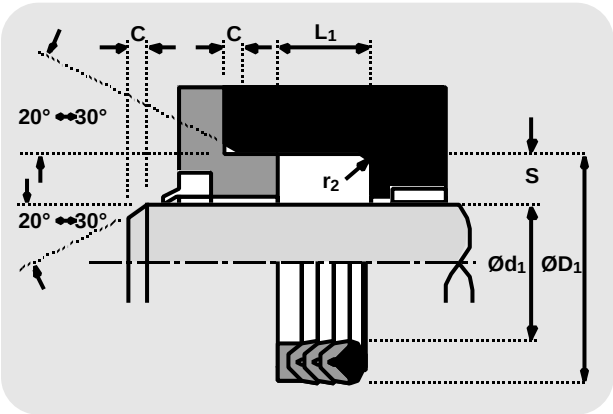

FEATURES

- EFFECTIVE DRI-ROD SEAL UNDER BOTH LOW AND HIGH PRESSURE CONDITIONS
- PRECISION MOULDED VEE RINGS
- PRESSURE ACTIVATED
- NO ADJUSTMENT NECESSARY

DESIGN

The Hallite 07 is a multi lip rod seal, for medium to heavy duty applications, composed of a header ring, vee rings and a female adaptor.

The header ring is the primary seal. It is a bonded construction of a rubberised fabric vee ring and rubber. When installed the section is pre-loaded to seal at low pressure but has the strength and durability of the fabric to operate at higher pressures. Rubberised fabric is also used for the vee rings. These provide secondary sealing as pressure acting on the header ring spreads the vee rings increasing the sealing area. The female adaptor provides the support and protection from extrusion damage. It is manufactured in either polyacetal or hard rubberised fabric. The assembly is a pressure activated packing that does not require any axial pre-load.

The range has a header ring, a female adaptor and 2 vee rings. Other sizes and constructions are available on request.

Vee pack sets

Hallite

07

metric

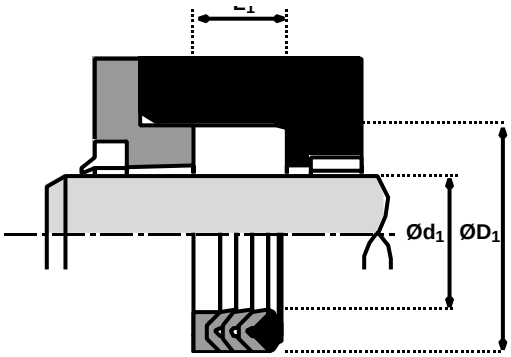

Ød1	TOL f9	ØD1	TOL Js11	L1 +0.25-0	PART No.
25	-0.020 -0.072	40	+0.08 -0.08	22.50	6630720
30	-0.020 -0.072	45	+0.08 -0.08	22.50	0400820
32	-0.025 -0.087	47	+0.08 -0.08	22.50	6630820
35	-0.025 -0.087	50	+0.08 -0.08	22.50	0339520
36	-0.025 -0.087	51	+0.10 -0.10	22.50	1251120
40	-0.025 -0.087	55	+0.10 -0.10	22.50	6532620
45	-0.025 -0.087	60	+0.10 -0.10	22.50	0385020
50	-0.025 -0.087	70	+0.10 -0.10	30.00	6631020
55	-0.030 -0.104	75	+0.10 -0.10	30.00	6631120
56	-0.030 -0.104	76	+0.10 -0.10	30.00	0338220
60	-0.030 -0.104	80	+0.10 -0.10	30.00	0892520
63	-0.030 -0.104	83	+0.11 -0.11	30.00	0467120
65	-0.030 -0.104	85	+0.11 -0.11	30.00	0467720
70	-0.030 -0.104	90	+0.11 -0.11	30.00	6631220
75	-0.030 -0.104	95	+0.11 -0.11	30.00	0446620
80	-0.030 -0.104	100	+0.11 -0.11	30.00	6631320

Ød1	TOL f9	ØD1	TOL Js11	L1 +0.25-0	PART No.
85	-0.036 -0.123	105	+0.11 -0.11	30.00	6631420
90	-0.036 -0.123	110	+0.11 -0.11	30.00	6631520
100	-0.036 -0.123	120	+0.11 -0.11	30.00	6631620
110	-0.036 -0.123	130	+0.13 -0.13	30.00	0308420
125	-0.043 -0.143	140	+0.13 -0.13	22.50	1362820
125	-0.043 -0.143	145	+0.13 -0.13	30.00	2179620
125	-0.043 -0.143	150	+0.13 -0.13	37.00	1365620
140	-0.043 -0.143	160	+0.13 -0.13	30.00	1272320
150	-0.043 -0.143	170	+0.13 -0.13	30.00	0044920
180	-0.043 -0.143	210	+0.15 -0.15	47.00	0090320
200	-0.050 -0.165	230	+0.15 -0.15	45.00	1282720
230	-0.050 -0.165	260	+0.16 -0.16	45.00	1220620
255	-0.050 -0.165	285	+0.16 -0.16	45.00	0137220
280	-0.056 -0.186	310	+0.16 -0.16	45.00	1342820
330	-0.062 -0.212	370	+0.18 -0.18	60.00	2018920
380	-0.062 -0.212	420	+0.22 -0.22	60.00	2017920

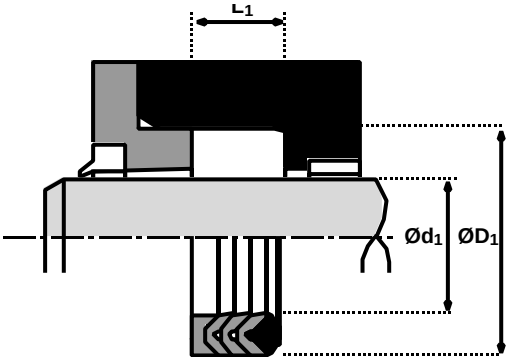

Vee pack sets

Hallite 07

inch

Ød1	TOL f9	ØD1	TOL Js11	L1 +0.010 - 0	PART No.
1.000	-0.0008 -0.0028	1.500	+0.003 -0.003	0.750	0820120
1.125	-0.0008 -0.0028	1.625	+0.003 -0.003	0.750	0379320
1.250	-0.0010 -0.0034	1.750	+0.003 -0.003	0.750	0821420
1.500	-0.0010 -0.0034	2.000	+0.004 -0.004	0.750	0618620
1.625	-0.0010 -0.0034	2.125	+0.004 -0.004	0.750	0206420
1.750	-0.0010 -0.0034	2.250	+0.004 -0.004	0.750	0889320
2.000	-0.0012 -0.0041	2.500	+0.004 -0.004	0.750	0617220
2.250	-0.0012 -0.0041	2.750	+0.004 -0.004	0.750	6630620
2.375	-0.0012 -0.0041	3.000	+0.004 -0.004	0.937	0207220

Ød1	TOL f9	ØD1	TOL Js11	L1 +0.010 - 0	PART No.
2.500	-0.0012 -0.0041	3.125	+0.004 -0.004	1.000	0819220
2.750	-0.0012 -0.0041	3.375	+0.004 -0.004	1.000	0819920
3.000	-0.0012 -0.0041	3.625	+0.004 -0.004	1.000	0893020
3.250	-0.0014 -0.0048	4.000	+0.004 -0.004	1.125	0207320
3.500	-0.0014 -0.0048	4.250	+0.004 -0.004	1.125	0818420
3.750	-0.0014 -0.0048	4.500	+0.004 -0.004	1.125	1014420
4.000	-0.0014 -0.0048	4.750	+0.005 -0.005	1.125	1356620
4.500	-0.0014 -0.0048	5.250	+0.005 -0.005	1.125	0354120

Notes

Vee pack sets

Hallite

09

TECHNICAL DETAILS

METRIC ○ — INCH ●

OPERATING CONDITIONS

MAXIMUM SPEED	0.5 m/sec	1.5 ft/sec
TEMPERATURE RANGE	-30°C + 100°C	-22°F + 212°F
MAXIMUM PRESSURE	400 bar	6000 p.s.i.

MAXIMUM EXTRUSION GAP

Figures show the maximum permissible gap all on one side ,for rod seals using minimum rod Ø and maximum clearance Ø and for piston seals using the minimum clearance Ø and maximum bore Ø

PRESSURE bar	100	175	250	400
MAXIMUM GAP mm	0.45	0.4	0.3	0.2
PRESSURE p.s.i.	1500	2250	3500	6000
MAXIMUM GAP in	0.018	0.015	0.010	0.007

SURFACE ROUGHNESS

	µmRa	µmRt	µin CLA	µinRMS
DYNAMIC SEALING FACE - ROD $Ød_1$	0.1 ↔ 0.4	4 max	4 ↔ 16	5 ↔ 18
STATIC SEALING FACE - ROD $ØD_1$	1.6 max	10 max	63 max	70 max
DYNAMIC SEALING FACE - PISTON $Ød_1$	0.1 ↔ 0.4	4 max	4 ↔ 16	5 ↔ 18
STATIC SEALING FACE - PISTON $ØD_1$	1.6 max	10 max	63 max	70 max
STATIC HOUSING FACES L_1	3.2 max	16 max	125 max	140 max

CHAMFERS & RADII

GROOVE SECTION ≤ S mm	5.0	7.5	10.0	12.5	15.0
MIN CHAMFER C mm	3.0	5.0	6.5	7.0	7.5
MAX FILLET RAD r_1 mm	0.5	0.8	0.8	0.8	0.8
GROOVE SECTION ≤ S in	0.187	0.250	0.312	0.375	0.500
MIN CHAMFER C in	0.093	0.125	0.156	0.187	0.250
MAX FILLET RAD r_1 in	0.020	0.031	0.031	0.031	0.031

TOLERANCES

	$Ød_1$	$ØD_1$	L_1 mm	L_1 in
ROD	f9	Js11	+0.75 -0.0	+0.030 -0
PISTON	js11	H9	+0.75 -0.0	+0.030 -0

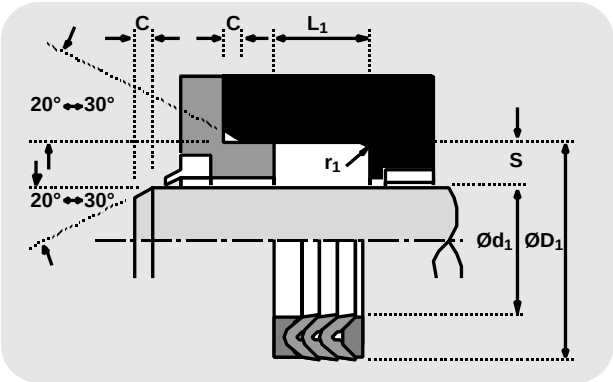

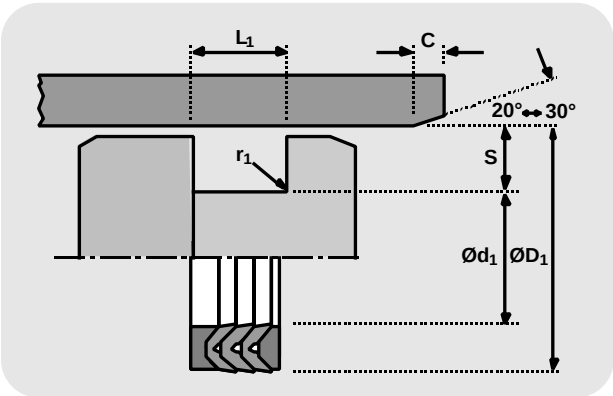

DESIGN

Hallite 09 vee packings incorporate the Hallite 08 vee ring manufactured from fabric reinforced high grade nitrile rubber, which is normally used in multiples in a set with a male and female adaptor.The parts are "stacked" together and must be lubricated liberally with clean operating fluid prior to assembly.

The packing must be axially pre-loaded by the housing. This preload works through the male adaptor on the pressure side, exerting a hinging action on the vees, forcing the sealing lips apart to ensure a low pressure seal. As the pressure increases, so the hinging action increases, increasing the effectiveness of the seal even where severe vibration, shock loading and knuckling may occur.

The standard Hallite 09 comprises of three vees and two adaptors, available in metric and imperial inch sizes. In addition to the ranges the Hallite 09 is also available for standard American inch housings. Some adaptors are rubber fabric while others are polyacetal resin. Individual vee rings are stocked to supplement the sets, but it should be noted that individual adaptors are only available in special circumstances.

For sizes not listed or for special requirements, please contact your Hallite sales office.

Vee pack sets

Hallite 09

metric

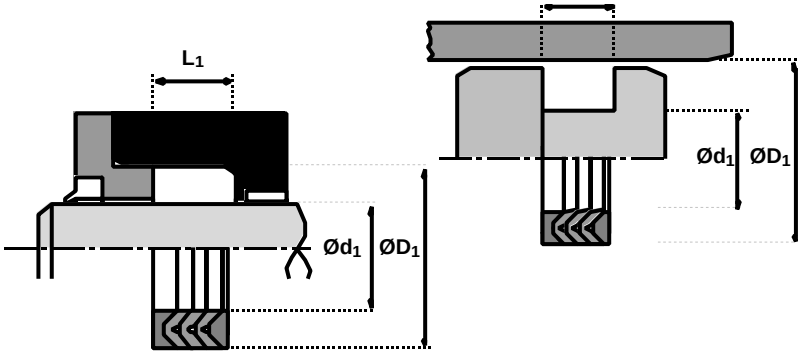

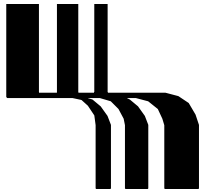

For bore tolerances refer to datasheet.

Ød1	TOL f9	ØD1	TOL js11	L1 tol +0.75 -0.0	PART No.
12.00	-0.016 -0.059	22.00	+0.055 -0.055	16.00	0188730
14.00	-0.016 -0.059	24.00	+0.055 -0.055	16.00	0189030
15.00	-0.016 -0.059	25.00	+0.055 -0.055	16.00	0189530
16.00	-0.016 -0.059	26.00	+0.055 -0.055	16.00	0190130
18.00	-0.016 -0.059	28.00	+0.055 -0.055	16.00	0190530
20.00	-0.020 -0.072	30.00	+0.065 -0.065	16.00	0190930
22.00	-0.020 -0.072	32.00	+0.065 -0.065	16.00	0191730
25.00	-0.020 -0.072	40.00	+0.065 -0.065	22.50	0192630
28.00	-0.020 -0.072	43.00	+0.065 -0.065	22.50	0193430
30.00	-0.020 -0.072	45.00	+0.065 -0.065	22.50	0193930
32.00	-0.025 -0.087	47.00	+0.080 -0.080	22.50	0194330
35.00	-0.025 -0.087	50.00	+0.080 -0.080	22.50	0195130
36.00	-0.025 -0.087	51.00	+0.080 -0.080	22.50	0196030
40.00	-0.025 -0.087	55.00	+0.080 -0.080	22.50	0196530
42.00	-0.025 -0.087	57.00	+0.080 -0.080	22.50	0196830
45.00	-0.025 -0.087	60.00	+0.080 -0.080	22.50	0197430
48.00	-0.025 -0.087	63.00	+0.080 -0.080	22.50	0197730
50.00	-0.025 -0.087	70.00	+0.080 -0.080	30.00	1208430
55.00	-0.030 -0.104	75.00	+0.095 -0.095	30.00	1208230
56.00	-0.030 -0.104	76.00	+0.095 -0.095	32.00	1208630
60.00	-0.030 -0.104	80.00	+0.095 -0.095	32.00	1208930
63.00	-0.030 -0.104	83.00	+0.095 -0.095	32.00	1209130
65.00	-0.030 -0.104	85.00	+0.095 -0.095	30.00	1209230

Ød1	TOL f9	ØD1	TOL js11	L1 tol +0.75 -0.0	PART No.
70.00	-0.030 -0.104	90.00	+0.095 -0.095	30.00	1209330
75.00	-0.030 -0.104	95.00	+0.095 -0.095	30.00	1209530
80.00	-0.030 -0.104	100.00	+0.095 -0.095	30.00	1209630
80.00	-0.030 -0.104	105.00	+0.095 -0.095	44.00	0984230
85.00	-0.036 -0.123	105.00	+0.110 -0.110	30.00	1209830
90.00	-0.036 -0.123	110.00	+0.095 -0.110	30.00	1210630
100.00	-0.036 -0.123	120.00	+0.095 -0.110	30.00	1210730
104.00	-0.036 -0.123	130.00	+0.095 -0.110	36.00	4121230
105.00	-0.036 -0.123	125.00	+0.095 -0.110	30.00	1203130
110.00	-0.036 -0.123	130.00	+0.095 -0.110	30.00	1195030
115.00	-0.036 -0.123	140.00	+0.095 -0.110	34.00	1215030
120.00	-0.036 -0.123	140.00	+0.095 -0.110	30.00	4137830
125.00	-0.43 -0.143	150.00	+0.125 -0.125	34.00	1215330
135.00	-0.043 -0.143	160.00	+0.125 -0.125	34.00	1197630
140.00	-0.043 -0.143	160.00	+0.125 -0.125	33.00	0677130
140.00	-0.043 -0.143	165.00	+0.125 -0.125	35.00	1219930
150.00	-0.043 -0.143	180.00	+0.125 -0.125	45.00	1220130
160.00	-0.043 -0.143	190.00	+0.125 -0.125	45.00	1221230
170.00	-0.043 -0.143	200.00	+0.125 -0.125	45.00	1224930
180.00	-0.043 -0.143	210.00	+0.125 -0.125	45.00	1225230
190.00	-0.050 -0.165	220.00	+0.145 -0.145	45.00	1225530
200.00	+0.050 -0.165	230.00	+0.145 -0.145	45.00	1225830

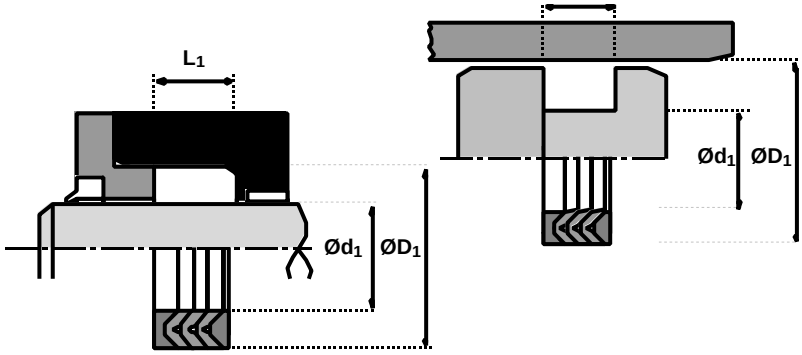

For bore tolerances refer to datasheet.

Vee pack sets

Hallite 09

inch

Ød1	TOL f9	ØD1	TOL js11	L1 tol +0.030 -0.0	PART No.
0.500	-0.0006 -0.0023	1.000	+0.003 -0.003	0.715	6530830
0.750	-0.0008 -0.0028	1.250	+0.003 -0.003	0.875	1735140
0.875	-0.0008 -0.0028	1.375	+0.003 -0.003	0.825	4135930
1.000	-0.0008 -0.0028	1.375	+0.003 -0.003	0.675	4138630
1.000	-0.0008 -0.0028	1.500	+0.003 -0.003	0.710	0183330
1.125	-0.0008 -0.0028	1.625	+0.003 -0.003	0.755	4136030
1.125	-0.0010 -0.0034	1.750	+0.003 -0.003	1.065	4115330
1.250	-0.0010 -0.0034	1.750	+0.003 -0.003	0.785	4102530
1.500	-0.0010 -0.0034	2.000	+0.004 -0.004	0.710	4007630
1.500	-0.0010 -0.0034	2.125	+0.004 -0.004	1.000	4002130
1.750	-0.0010 -0.0034	2.250	+0.004 -0.004	0.825	1461530
1.750	-0.0010 -0.0034	2.375	+0.004 -0.004	1.000	4135130
1.875	-0.0010 -0.0034	2.500	+0.004 -0.004	0.950	4136230
2.000	-0.0012 -0.0041	2.500	+0.004 -0.004	0.715	4007430
2.000	-0.0012 -0.0041	2.625	+0.004 -0.004	0.898	6557940
2.000	-0.0012 -0.0041	2.750	+0.004 -0.004	0.986	6575730
2.250	-0.0012 -0.0041	2.750	+0.004 -0.004	0.705	6555230
2.250	-0.0012 -0.0041	2.875	+0.004 -0.004	0.937	6530730
2.250	-0.0012 -0.0041	3.000	+0.004 -0.004	0.960	4008030

Ød1	TOL f9	ØD1	TOL js11	L1 tol +0.030 -0.0	PART No.
2.375	-0.0012 -0.0041	3.000	+0.004 -0.004	0.990	4129530
2.500	-0.0012 -0.0041	3.000	+0.004 -0.004	0.777	0334330
2.500	-0.0012 -0.0041	3.125	+0.005 -0.005	0.961	4122230
2.500	-0.0012 -0.0041	3.250	+0.005 -0.005	1.222	4002530
2.750	-0.0012 -0.0041	3.250	+0.005 -0.005	0.795	4182430
2.750	-0.0012 -0.0041	3.500	+0.005 -0.005	0.978	4008430
3.000	-0.0014 -0.0048	3.500	+0.005 -0.005	0.725	4130730
3.000	-0.0014 -0.0048	3.625	+0.005 -0.005	0.918	4001530
3.000	-0.0014 -0.0048	3.750	+0.005 -0.005	1.159	0636930*
3.250	-0.0014 -0.0048	4.000	+0.005 -0.005	0.960	4008330
3.375	-0.0014 -0.0048	4.000	+0.005 -0.005	0.833	4002730
3.375	-0.0014 -0.0048	4.125	+0.005 -0.005	1.236	4134030
3.500	-0.0014 -0.0048	4.000	+0.005 -0.005	0.825	1461130
3.500	-0.0014 -0.0048	4.250	+0.005 -0.005	1.086	4115830
3.750	-0.0014 -0.0048	4.375	+0.005 -0.005	0.900	1365330
3.750	-0.0014 -0.0048	4.500	+0.005 -0.005	1.090	0755731*
3.875	-0.0014 -0.0048	4.500	+0.005 -0.005	0.878	4001930
4.000	-0.0014 -0.0048	4.500	+0.005 -0.005	0.775	6565930
4.000	-0.0014 -0.0048	4.750	+0.005 -0.005	1.000	6573130

Vee pack sets

Hallite

09

inch

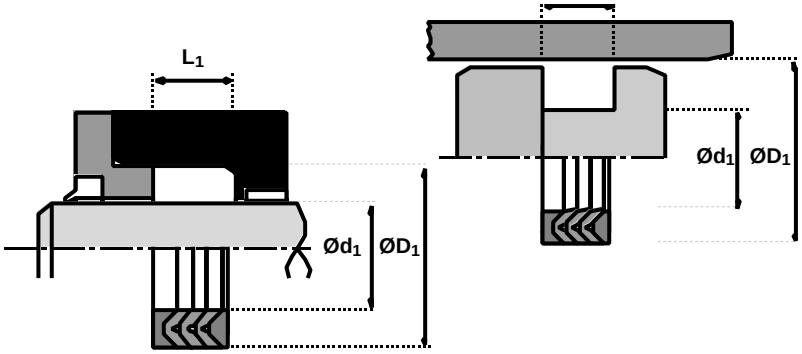

For bore tolerances refer to datasheet.

Ød1	TOL f9	ØD1	TOL js11	L1 tol +0.030 -0.0	PART No.
4.000	-0.0014 -0.0048	5.000	+0.005 -0.005	1.440	0563630
4.250	-0.0014 -0.0048	5.000	+0.005 -0.005	1.090	0299330
5.000	-0.0016 -0.0056	6.000	+0.005 -0.005	1.765	0307530*
5.250	-0.0016 -0.0056	6.000	+0.005 -0.005	1.055	0411130

Ød1	TOL f9	ØD1	TOL js11	L1 tol +0.030 -0.0	PART No.
5.500	-0.0016 -0.0056	6.500	+0.005 -0.005	1.172	0048430
6.000	-0.0016 -0.0056	6.500	+0.005 -0.005	0.675	1207030

* Supplied with OD anti-extrusion ring.

Vee pack sets

Hallite

TECHNICAL DETAILS

METRIC ○ — INCH ●

OPERATING CONDITIONS

MAXIMUM SPEED	0.5 m/sec	1.5 ft/sec
TEMPERATURE RANGE	-30°C + 100°C	-22°F + 212°F
MAXIMUM PRESSURE	400 bar	6,000 p.s.i.

MAXIMUM EXTRUSION GAP

Figures show the maximum permissible gap all on one side using minimum rod Ø and maximum clearance Ø.

PRESSURE bar	100	160	250	400
MAXIMUM GAP mm	0.45	0.4	0.3	0.2
PRESSURE p.s.i.	1500	2400	3750	6000

SURFACE ROUGHNESS

	µmRa	µmRt	µin CLA	µinRMS
DYNAMIC SEALING FACE $Ød_1$	0.1 ↔ 0.4	4 max	4 ↔ 16	5 ↔ 18
STATIC SEALING FACE $ØD_1$	1.6 max	10 max	63 max	70 max
STATIC HOUSING FACES L_1	3.2 max	16 max	125 max	140 max

CHAMFERS & RADII

GROOVE SECTION ≤ S mm	7.5	10.0	12.5	15.0
MIN CHAMFER C mm	4.0	5.0	6.5	7.5
MAX FILLET RAD r_2 mm	0.4	1.2	1.6	1.6

TOLERANCES

$Ød_1$	$ØD_1$	L_1 mm
f9	H11	+0.2 -0

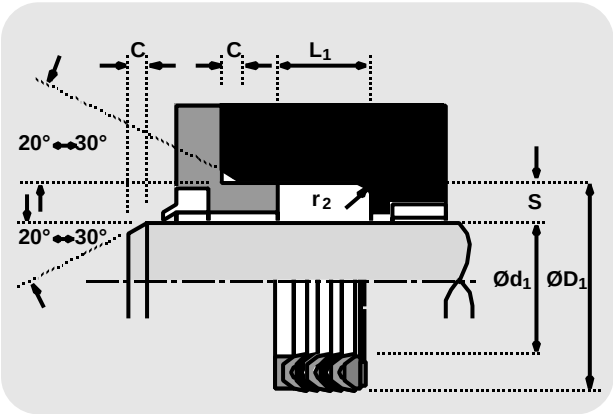

FEATURES

- PRECISION MOULDED VEE RINGS
- PRESSURE DISTRIBUTION ADAPTORS
- RELIABLE SEALING

DESIGN

The Hallite 11 is a vee pack rod seal for medium duty applications offering excellent performance and long life even under difficult operating conditions such as pressure surges , vibration and some misalignment. The seal consists of a male and female adaptor and 5 vee rings.
The male adaptor is usually manufactured from polyacetal but some of the larger sizes use rubberised fabric. It has grooves across one face to ensure equal pressure to the sealing edges of the vee ring.

All sizes have three vee rings manufactured from rubberised fabric because this has strength and durability and permits an oil film to lubricate the other parts of the seal. Two rubber vee rings are supplied between the rubberised fabric vee rings (up to and including 140mm diameter) to aid low pressure sealing.

The female adaptor uses a hard rubberised fabric to support the vee rings and protect them from extrusion damage. At high pressure the lips of the adaptor acts as a secondary seal.

The proportions of the range have been determined to give a satisfactory performance when used with the recommended operating conditions.

Vee pack sets

Hallite

11

metric

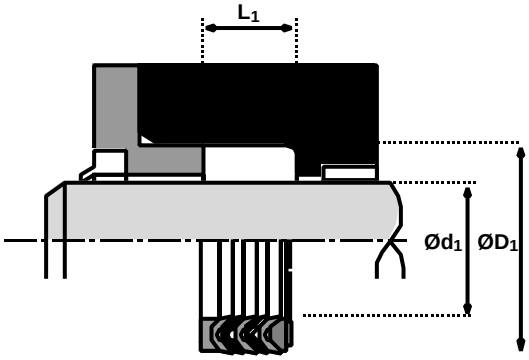

Ød1	TOL f9	ØD1	TOL H11	L1 +0.2-0	PART No.
20	-0.020 -0.072	30	+0.13 +0.00	18.50	4201750
25	-0.020 -0.072	37	+0.16 +0.00	22.50	4198950
28	-0.020 -0.072	40	+0.16 +0.00	22.50	4202050
30	-0.020 -0.072	42	+0.16 +0.00	22.50	4202150
32	-0.025 -0.087	44	+0.16 +0.00	22.50	4202250
35	-0.025 -0.087	47	+0.16 +0.00	22.50	4202350
36	-0.025 -0.087	48	+0.16 +0.00	22.50	4202450
40	-0.025 -0.087	52	+0.19 +0.00	22.50	4202550
42	-0.025 -0.087	54	+0.19 +0.00	22.50	4202650
45	-0.025 -0.087	60	+0.19 +0.00	22.50	4202750
50	-0.025 -0.087	65	+0.19 +0.00	22.50	4199050
55	-0.030 -0.104	70	+0.19 +0.00	22.50	4202950
56	-0.030 -0.104	71	+0.19 +0.00	22.50	4203050
60	-0.030 -0.104	75	+0.19 +0.00	22.50	4203150
63	-0.030 -0.104	78	+0.19 +0.00	22.50	4203250

Ød1	TOL f9	ØD1	TOL H11	L1 +0.2-0	PART No.
65	-0.030 -0.104	80	+0.19 +0.00	22.50	4203350
70	-0.030 -0.104	85	+0.22 +0.00	22.50	4203450
75	-0.030 -0.104	90	+0.22 +0.00	22.50	4203550
80	-0.030 -0.104	95	+0.22 +0.00	22.50	4203650
85	-0.036 -0.123	100	+0.22 +0.00	22.50	4203750
90	-0.036 -0.123	105	+0.22 +0.00	22.50	4203850
100	-0.036 -0.123	115	+0.22 +0.00	30.00	4203950
110	-0.036 -0.123	125	+0.25 +0.00	30.00	4204050
125	-0.043 -0.143	140	+0.25 +0.00	34.00	4204250
140	-0.043 -0.143	155	+0.25 +0.00	34.00	4199250
150	-0.043 -0.143	170	+0.25 +0.00	40.00	2196650
160	-0.043 -0.143	180	+0.25 +0.00	40.00	2196750
180	-0.043 -0.143	200	+0.29 +0.00	40.00	2196850
200	-0.050 -0.165	220	+0.29 +0.00	40.00	2196950

Vee pack sets

Hallite

12

TECHNICAL DETAILS

METRIC ○ INCH ●

OPERATING CONDITIONS

MAXIMUM SPEED	0.5 m/sec	1.5 ft/sec
TEMPERATURE RANGE	-30°C + 100°C	-22°F + 212°F
MAXIMUM PRESSURE	400 bar	6,000 p.s.i.

MAXIMUM EXTRUSION GAP

Figures show the maximum permissible gap all on one side using minimum rod Ø and maximum clearance Ø.

PRESSURE bar	100	160	250	400
MAXIMUM GAP mm	0.45	0.4	0.3	0.2
PRESSURE p.s.i.	1500	2400	3750	6000

SURFACE ROUGHNESS

	µmRa	µmRt	µin CLA	µinRMS
DYNAMIC SEALING FACE $Ød_1$	0.1 ↔ 0.4	4 max	4 ↔ 16	5 ↔ 18
STATIC SEALING FACE $ØD_1$	1.6 max	10 max	63 max	70 max
STATIC HOUSING FACES L_1	3.2 max	16 max	125 max	140 max

CHAMFERS & RADII

GROOVE SECTION ≤ S mm	7.5	10.0
MIN CHAMFER C mm	4.0	5.0
MAX FILLET RAD r_2 mm	0.8	1.2

TOLERANCES

$Ød_1$	$ØD_1$	L_1 mm
f9	H11	+0.2 -0

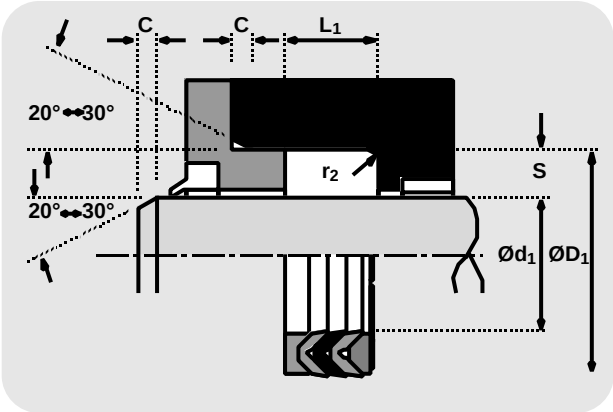

FEATURES

- PRECISION MOULDED VEE RINGS
- PRESSURE DISTRIBUTION ADAPTORS
- RELIABLE SEALING

DESIGN

The Hallite 12 is a vee pack rod seal for medium duty applications offering excellent performance and long life even under difficult operating conditions such as pressure surges, vibration and some misalignment. The seal consists of a male and female adaptor and 3 vee rings. The male adaptor is usually manufactured from polyacetal but some of the larger sizes use rubberised fabric. It has grooves across one face to ensure equal pressure to the sealing edges of the vee ring.

All the sizes have two vee rings manufactured from rubberised fabric because this has strength and durability and permits an oil film to lubricate the other parts of the seal. A rubber vee ring is supplied between the rubberised fabric vee rings (up to and including 140mm diameter) to aid low pressure sealing.

The female adaptor uses a hard rubberised fabric to support the vee rings and protect them from extrusion damage. At high pressures the lips of the adaptor act as a secondary seal.

The proportions of the range have been determined to give a satisfactory performance when used with the recommended operating conditions.

Vee pack sets

Hallite

12

metric

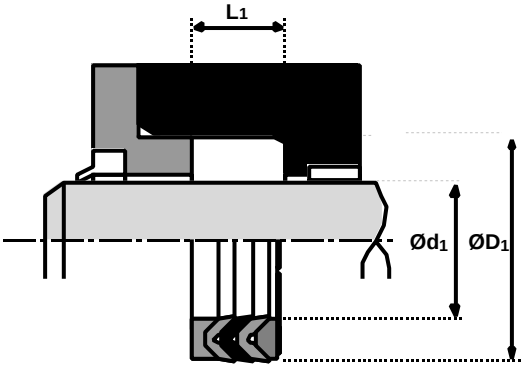

Ød1	TOL f9	ØD1	TOL H11	L1 +0.2-0	PART No.
20	-0.020 -0.072	30	+0.13 +0.00	13.50	4201730
25	-0.020 -0.072	37	+0.16 +0.00	16.50	4198930
28	-0.020 -0.072	40	+0.16 +0.00	16.50	4202030
30	-0.020 -0.072	42	+0.16 +0.00	16.50	4202130
32	-0.025 -0.087	44	+0.16 +0.00	16.50	4202230
35	-0.025 -0.087	47	+0.16 +0.00	16.50	4202330
36	-0.025 -0.087	48	+0.16 +0.00	16.50	4202430
40	-0.025 -0.087	52	+0.019 +0.00	16.50	4202530
42	-0.025 -0.087	54	+0.19 +0.00	16.50	4202630
45	-0.025 -0.087	60	+0.19 +0.00	16.50	4202730
50	-0.025 -0.087	65	+0.19 +0.00	16.50	4199030
55	-0.030 -0.104	70	+0.19 +0.00	16.50	4202930
56	-0.030 -0.104	71	+0.19 +0.00	16.50	4203030
60	-0.030 -0.104	75	+0.19 +0.00	16.50	4203130
63	-0.030 -0.104	78	+0.19 +0.00	16.50	4203230

Ød1	TOL f9	ØD1	TOL H11	L1 +0.2-0	PART No.
65	-0.030 -0.104	80	+0.19 +0.00	16.50	4203330
70	-0.030 -0.104	85	+0.22 +0.00	16.50	4203430
75	-0.030 -0.104	90	+0.22 +0.00	16.50	4203530
80	-0.030 -0.104	95	+0.22 +0.00	16.50	4203630
85	-0.036 -0.123	100	+0.22 +0.00	16.50	4203730
90	-0.036 -0.123	105	+0.22 +0.00	16.50	4203830
100	-0.036 -0.123	115	+0.22 +0.00	22.00	4203930
110	-0.036 -0.123	125	+0.25 +0.00	22.00	4204030
125	-0.043 -0.143	140	+0.25 +0.00	26.00	4204230
140	-0.043 -0.143	155	+0.25 +0.00	26.00	4199230
150	-0.043 -0.143	170	+0.25 +0.00	30.00	2196630
160	-0.043 -0.143	180	+0.25 +0.00	30.00	2196730
180	-0.043 -0.143	200	+0.29 +0.00	30.00	2196830
200	-0.050 -0.165	220	+0.29 +0.00	30.00	2196930

Vee pack sets

Hallite

13

TECHNICAL DETAILS

METRIC ○ — ● INCH

OPERATING CONDITIONS

MAXIMUM SPEED	0.5 m/sec	1.5 ft/sec
TEMPERATURE RANGE	-30°C + 100°C	-22°F + 212°F
MAXIMUM PRESSURE	700 bar	10,000 p.s.i.

MAXIMUM EXTRUSION GAP

Figures show the maximum permissible gap all on one side using minimum rod Ø and maximum clearance Ø.

PRESSURE bar	160	250	400	700
MAXIMUM GAP mm	0.4	0.3	0.2	0.1
PRESSURE p.s.i.	2400	3750	6000	10,000

SURFACE ROUGHNESS

	µmRa	µmRt	µinCLA	µinRMS
DYNAMIC SEALING FACE $Ød_1$	0.1 ↔ 0.4	4 max	4 ↔ 16	5 ↔ 18
STATIC SEALING FACE $ØD_1$	1.6 max	10 max	63 max	70 max
STATIC HOUSING FACES L_1	3.2 max	16 max	125 max	140 max

CHAMFERS & RADII

GROOVE SECTION ≤ S mm	6.0	7.5	10.0	12.5	15.0	20.0
MIN CHAMFER C mm	3.0	4.0	5.0	6.5	7.5	10.0
MAX FILLET RAD r_2 mm	0.4	0.4	1.2	1.6	1.6	1.6

TOLERANCES

$Ød_1$	$ØD_1$	L_1 mm
f9	H11	+0.2 -0

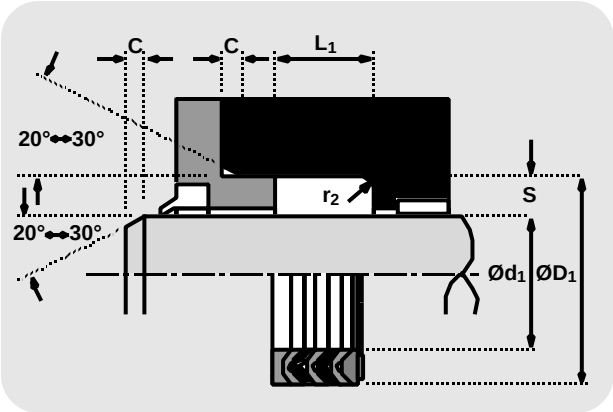

FEATURES

- PRECISION MOULDED VEE RINGS
- PRESSURE DISTRIBUTION ADAPTORS
- RELIABLE SEALING

DESIGN

The Hallite 13 is a Vee pack rod seal for heavy duty applications offering excellent performance and long life even under difficult operating conditions such as pressure surges, vibration and some misalignment. The seal assembly consists a male and female adaptor and 5 vee rings.

The male adaptor is usually manufactured from polyacetal but some of the larger sizes use rubberised fabric. It has grooves across one face to ensure equal pressure to the sealing edges of the vee ring.

All sizes have vee rings manufactured from rubberised fabric because this has strength and durability and permits an oil film to lubricate the other parts of the seal. Some sizes are supplied with rubber vee rings between the rubberised fabric vee rings. The number and type of vee rings used are :

	Up to 89 mm ±	90 mm ± 139mm ±	Above 139mm±
Rubberised Fabric vee„s	3	4	5
Rubber vee„s	2	1	

The female adaptor uses a hard rubberised fabric to support the vee rings and protect them from extrusion damage. At high pressures the lips of the adaptor act as a secondary seal.

Vee pack sets

Hallite

13

metric

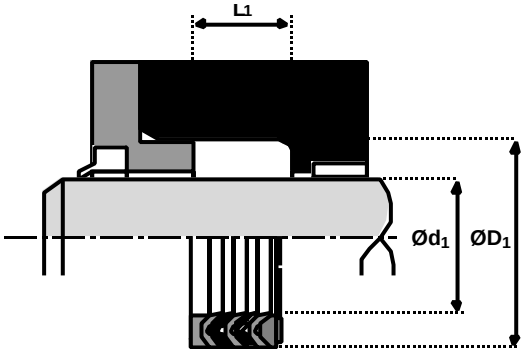

Ød1	TOL f9	ØD1	TOL H11	L1 +0.2-0	PART No.
20	-0.020 -0.072	32	+0.13 +0.00	22.50	4204950
25	-0.020 -0.072	40	+0.16 +0.00	22.50	4205050
30	-0.020 -0.072	45	+0.16 +0.00	22.50	4205150
35	-0.025 -0.087	50	+0.16 +0.00	22.50	4205250
40	-0.025 -0.087	55	+0.19 +0.00	22.50	4205350
45	-0.025 -0.087	65	+0.19 +0.00	27.50	4205450
50	-0.025 -0.087	70	+0.19 +0.00	30.00	4205550
55	-0.030 -0.104	75	+0.19 +0.00	30.00	4205650
60	-0.030 -0.104	80	+0.19 +0.00	37.00	4205750
65	-0.030 -0.104	85	+0.22 +0.00	40.00	4205850
70	-0.030 -0.104	90	+0.22 +0.00	40.00	4205950
75	-0.030 -0.104	95	+0.22 +0.00	40.00	4206050
80	-0.030 -0.104	100	+0.22 +0.00	40.00	4206150
90	-0.036 -0.123	110	+0.22 +0.00	40.00	4206250
100	-0.036 -0.123	120	+0.22 +0.00	40.00	4199150

Ød1	TOL f9	ØD1	TOL H11	L1 +0.2-0	PART No.
110	-0.036 -0.123	130	+0.25 +0.00	40.00	4206350
115	-0.036 -0.123	140	+0.25 +0 00	46.00	4206450
125	-0.043 -0.143	150	+0.25 +0.00	46.00	4206550
140	-0.043 -0.143	165	+0.25 +0.00	46.00	4206650
150	-0.043 -0.143	180	+0.25 +0.00	60.00	4206750
160	-0.043 -0.143	190	+0.29 +0.00	60.00	4206850
180	-0.043 -0.143	210	+0.29 +0.00	60.00	4206950
195	-0.050 -0.165	225	+0.29 +0.00	62.50	6582150
200	-0.050 -0.165	230	+0.29 +0.00	60.00	4207050
220	-0.050 -0.165	250	+0.29 +0.00	62.50	6582350
245	-0.050 -0.165	275	+0.32 +0.00	62.50	6582450
270	-0.056 -0.186	300	+0.32 +0.00	62.50	6582550
290	-0.056 -0.186	320	+0.36 +0.00	64.00	6582650
320	-0.062 -0.212	360	+0.36 +0.00	78.00	6582750
380	-0.062 -0.212	420	+0.40 +0.00	80.00	6584050

Vee pack sets

Hallite

14

TECHNICAL DETAILS

METRIC ○ — ● INCH

OPERATING CONDITIONS

MAXIMUM SPEED	0.5 m/sec	1.5 ft/sec
TEMPERATURE RANGE	-30°C + 100°C	-22°F + 212°F
MAXIMUM PRESSURE	700 bar	10,000 p.s.i.

MAXIMUM EXTRUSION GAP

Figures show the maximum permissible gap all on one side using minimum rod Ø and maximum clearance Ø.

PRESSURE bar	160	250	400	700
MAXIMUM GAP mm	0.4	0.3	0.2	0.1
PRESSURE p.s.i.	2400	3750	6000	10,000

SURFACE ROUGHNESS

	µmRa	µmRt	µinCLA	µinRMS
DYNAMIC SEALING FACE $Ød_1$	0.1 ↔ 0.4	4 max	4 ↔ 16	5 ↔ 18
STATIC SEALING FACE $ØD_1$	1.6 max	10 max	63 max	70 max
STATIC HOUSING FACES L_1	3.2 max	16 max	125 max	140 max

CHAMFERS & RADII

GROOVE SECTION ≤ S mm	6.0	7.5	10	12.5	15.0	20.0
MIN CHAMFER C mm	3.0	4.0	5.0	6.5	7.5	10.0
MAX FILLET RAD r_2 mm	0.4	0.4	1.2	1.6	1.6	1.6

TOLERANCES

$Ød_1$	$ØD_1$	L_1 mm
f9	H11	+0.2 -0

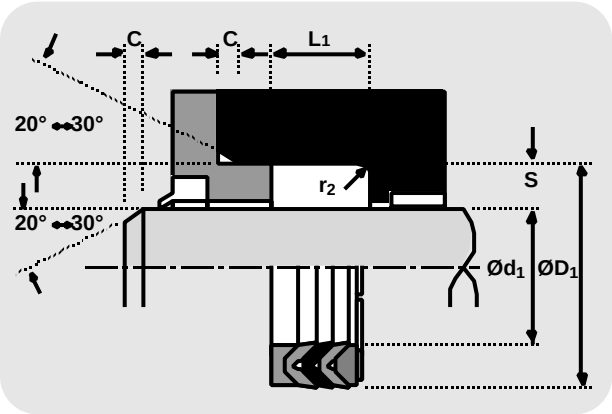

FEATURES

- PRECISION MOULDED VEE RINGS
- PRESSURE DISTRIBUTION ADAPTORS
- RELIABLE SEALING

DESIGN

The Hallite 14 is a vee pack rod seal for heavy duty applications offering excellent performance and long life even under difficult operating conditions such as pressure surges, vibration and some misalignment. The seal consists of a male and female adaptor and three vee rings.

The male adaptor is usually manufactured from polyacetal but some of the larger sizes use rubberised fabric. It has grooves across one face to ensure equal pressure to the sealing edges of the vee ring.

All sizes have vee rings manufactured from rubberised fabric because this has strength and durability and permits an oil film to lubricate the other parts of the seal. The smaller sizes are supplied with a rubber vee ring between the rubberised fabric vee rings. The number and type of vee rings used are :

	Up to 139mm ±	Above 140mm ±
Rubberised fabric vee ring	2	3
Rubber vee ring		1

The female adaptor uses a hard rubberised fabric to support the vee rings and protect them from extrusion damage. At high pressures the lips of the adaptor act as a secondary seal.

Vee pack sets

Hallite

14

metric

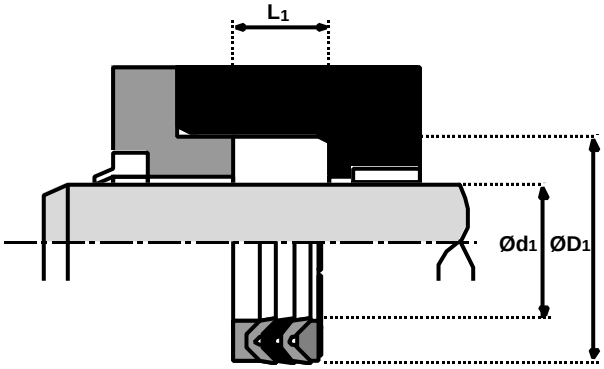

Ød1	TOL f9	ØD1	TOL H11	L1 +0.2-0	PART No.
20	-0.020 -0.072	32	+0.16 +0.00	16.50	4204930
25	-0.020 -0.072	40	+0.16 +0.00	16.50	4205030
30	-0.020 -0.072	45	+0.16 +0.00	16.50	4205130
35	-0.025 -0.087	50	+0.16 +0.00	16.50	4205230
40	-0.025 -0.087	55	+0.19 +0.00	16.50	4205330
45	-0.025 -0.087	65	+0.19 +0.00	20.50	4205430
50	-0.025 -0.087	70	+0.19 +0.00	22.00	4205530
55	-0.030 -0.104	75	+0.19 +0.00	22.00	4205630
60	-0.030 -0.104	80	+0.19 +0.00	27.00	4205730
65	-0.030 -0.104	85	+0.22 +0.00	30.00	4205830
70	-0.030 -0.104	90	+0.22 +0.00	30.00	4205930
75	-0.030 -0.104	95	+0.22 +0.00	30.00	4206030
80	-0.030 -0.104	100	+0.22 +0.00	30.00	4206130
90	-0.036 -0.123	110	+0.22 +0.00	30.00	4206230
100	-0.036 -0.123	120	+0.22 +0.00	30.00	4199130

Ød1	TOL f9	ØD1	TOL H11	L1 +0.2-0	PART No.
110	-0.036 -0.123	130	+0.25 +0.00	30.00	4206330
115	-0.036 -0.123	140	+0.25 +0.00	34.00	4206430
125	-0.043 -0.143	150	+0.25 +0.00	34.00	4206530
140	-0.043 -0.143	165	+0.25 +0.00	34.00	4206630
150	-0.043 -0.143	180	+0.25 +0.00	45.00	4206730
160	-0.043 -0.143	190	+0.29 +0.00	45.00	4206830
180	-0.043 -0.143	210	+0.29 +0.00	45.00	4206930
195	-0.050 -0.165	225	+0.29 +0.00	47.50	6582130
200	-0.050 -0.165	230	+0.29 +0.00	45.00	4207030
220	-0.050 -0.165	250	+0.29 +0.00	47.50	6582330
245	-0.050 -0.165	275	+0.32 +0.00	47.50	6582430
270	-0.056 -0.186	300	+0.32 +0.00	47.50	6582530
290	-0.056 -0.186	320	+0.36 +0.00	49.00	6582630
320	-0.062 -0.212	360	+0.36 +0.00	58.00	6582730
380	-0.062 -0.212	420	+0.40 +0.00	60.00	6584030

Rod seals

Hallite

15

TECHNICAL DETAILS

METRIC ○ INCH ●

OPERATING CONDITIONS

MAXIMUM SPEED	0.5 m/sec	1.5 ft/sec
MAXIMUM TEMPERATURE	-30°C + 100°C	-22°F + 212°F
MAXIMUM PRESSURE	300 bar	4500 p.s.i.

MAXIMUM EXTRUSION GAP

Figures show the maximum permissible gap all on one side using minimum rod Ø and maximum clearance Ø.

PRESSURE bar	100	160	250	300
MAXIMUM GAP mm	0.45	0.4	0.3	0.25
PRESSURE p.s.i.	1500	2400	3750	4500
MAXIMUM GAP in	0.018	0.016	0.012	0.010

SURFACE ROUGHNESS

	µmRa	µmRt	µinCLA	µinRMS
DYNAMIC SEALING FACE $Ød_1$	0.1 Ö 0.4	4 max	4 Ö 16	5 Ö 18
STATIC SEALING FACE $ØD_1$	1.6 max	10 max	63 max	70 max
STATIC HOUSING FACES L_1	3.2 max	16 max	125 max	140 max

CHAMFERS & RADII

GROOVE SECTION ≤ S mm	4.0	5.0	6.0	7.5	10.0
MIN CHAMFER C mm	2.0	2.5	3.0	4.0	5.0
MAX FILLET RAD r_1 mm	0.2	0.4	0.8	0.8	0.8
MAX FILLET RAD r_2 mm	0.4	0.8	1.2	1.2	1.2
GROOVE SECTION ≤ S in	0.250	0.312	0.375	0.500	
MIN CHAMFER C in	0.125	0.156	0.187	0.217	
MAX FILLET RAD r_1 in	0.016	0.032	0.032	0.032	
MAX FILLET RAD r_2 in	0.032	0.047	0.047	0.047	

TOLERANCES

$Ød_1$	$ØD_1$	L_1 mm	L_1 in
f9	Js11	+0.25 -0	+0.010 -0

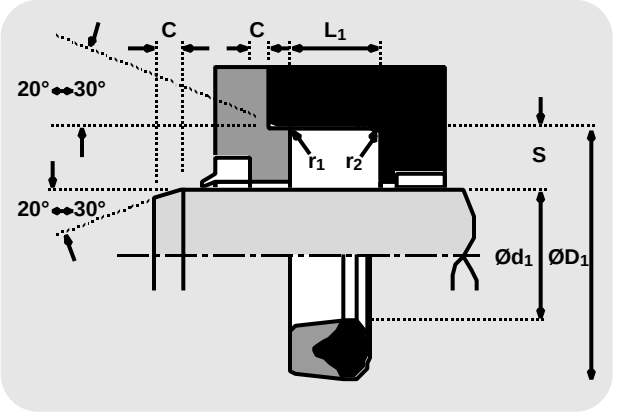

FEATURES

- WELL PROVEN SEAL
- CONTAMINATION RESISTANCE
- GOOD WEAR RESISTANCE

DESIGN

The Hallite 15 rod seal has been well proven in many applications requiring a compact, low friction seal to work efficiently both at low and high pressures.

The seal comprises a rubberised fabric U ring to give strength and durability, to which is moulded a rubber header. It is designed to have a controlled pre-load across the angled rubber lips which are accurately machine trimmed, to ensure a good seal at low pressure.

The seal becomes more effective as the pressure increases and the rubberised fabric deforms to the housing increasing the seal contact area. The surface of the fabric has pockets which retain lubrication to reduce friction and wear.

The proportions of the range have been determined to give a satisfactory performance when used with the recommended operating conditions. Many other sizes are available outside this range.

Rod seals

Hallite 15

inch

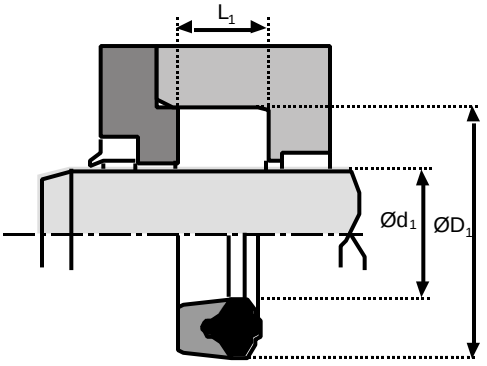

Ød1	TOL f9	ØD1	TOL Js11	L1 +0.010 -0	PART No.
0.375	-0.0005 -0.0019	0.750	+0.003 -0.003	0.281	0036400
0.750	-0.0008 -0.0028	1.250	+0.003 -0.003	0.375	0893300
0.875	-0.0008 -0.0028	1.375	+0.003 -0.003	0.375	0893800
1.000	-0.0008 -0.0028	1.500	+0.003 -0.003	0.375	0623400
1.250	-0.0010 -0.0034	1.875	+0.003 -0.003	0.437	0332400
1.375	-0.0010 -0.0034	2.000	+0.004 -0.004	0.437	0981500
1.500	-0.0010 -0.0034	2.125	+0.004 -0.004	0.437	0894900
1.625	-0.0010 -0.0034	2.250	+0.004 -0.004	0.437	0895000
1.750	-0.0010 -0.0034	2.375	+0.004 -0.004	0.437	0895100
1.875	-0.0010 -0.0034	2.500	+0.004 -0.004	0.437	0895200
2.000	-0.0012 -0.0041	2.625	+0.004 -0.004	0.437	0895300
2.250	-0.0012 -0.0041	3.000	+0.004 -0.004	0.562	0897100
2.500	-0.0012 -0.0041	3.000	+0.004 -0.004	0.312	0974500
2.500	-0.0012 -0.0041	3.250	+0.004 -0.004	0.562	0897400

Ød1	TOL f9	ØD1	TOL Js11	L1 +0.010 -0	PART No.
2.750	-0.0012 -0.0041	3.500	+0.004 -0.004	0.562	0897500
3.000	-0.0012 -0.0041	3.625	+0.004 -0.004	0.375	0389100
3.000	-0.0012 -0.0041	3.750	+0.004 -0.004	0.562	0897700
3.250	-0.0014 -0.0048	4.000	+0.004 -0.004	0.562	0897800
3.375	-0.0014 -0.0048	3.875	+0.004 -0.004	0.437	2190500
3.500	-0.0014 -0.0048	4.250	+0.004 -0.004	0.562	0897900
3.750	-0.0014 -0.0048	4.750	+0.005 -0.005	0.750	0898800
4.000	-0.0014 -0.0048	5.000	+0.005 -0.005	0.750	0898900
4.500	-0.0014 -0.0048	5.500	+0.005 -0.005	0.750	0081200
4.750	-0.0017 -0.0056	5.750	+0.005 -0.005	0.750	1190300
5.000	-0.0017 -0.0056	5.750	+0.005 -0.005	0.500	0179600
6.000	-0.0017 -0.0056	7.000	+0.005 -0.005	0.750	0045400
8.000	-0.0020 -0.0065	8.500	+0.006 -0.006	0.375	2190800

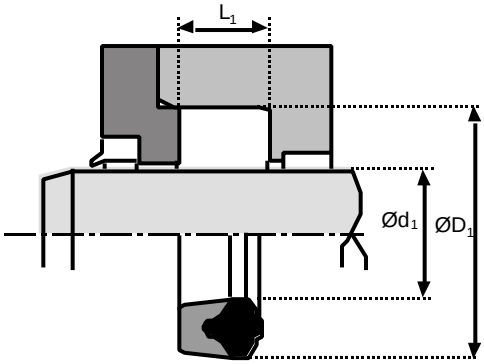

Rod seals

Hallite 15

metric

Ød1	TOL f9	ØD1	TOL Js11	L1 +0.25-0	PART No.
15	-0.016 -0.059	25	+0.07 -0.07	9.0	1798200
16	-0.016 -0.059	24	+0.07 -0.07	6.4	2174100
16	-0.016 -0.059	26	+0.07 -0.07	8.0	0754300
18	-0.016 -0.059	26	+0.07 -0.07	6.0	0074800
20	-0.020 -0.072	28	+0.07 -0.07	6.4	2137000
22	-0.020 -0.072	30	+0.07 -0.07	6.4	2137100
22	-0.020 -0.072	32	+0.08 -0.08	9.0	0377300
25	-0.020 -0.072	33	+0.08 -0.08	6.4	2137200
28	-0.020 -0.072	36	+0.08 -0.08	6.4	2137300
28	-0.020 -0.072	40	+0.08 -0.08	9.0	0690700
30	-0.020 -0.072	38	+0.08 -0.08	6.4	2137400
30	-0.020 -0.072	40	+0.08 -0.08	7.5	0032400
32	-0.025 -0.087	40	+0.08 -0.08	6.4	2137500
35	-0.025 -0.087	43	+0.08 -0.08	6.4	2137600
35	-0.025 -0.087	50	+0.08 -0.08	11.0	0874400
36	-0.025 -0.087	44	+0.08 -0.08	6.4	2137700
36	-0.025 -0.087	48	+0.08 -0.08	9.0	0690600
40	-0.025 -0.087	48	+0.08 -0.08	6.4	2137800
40	-0.025 -0.087	50	+0.08 -0.08	7.5	0188600
40	-0.025 -0.087	50	+0.08 -0.08	10.5	1252100
45	-0.025 -0.087	55	+0.10 -0.10	8.0	2137900

Ød1	TOL f9	ØD1	TOL Js11	L1 +0.25-0	PART No.
45	-0.025 -0.087	60	+0.10 -0.10	10.0	1022800
50	-0.025 -0.087	60	+0.10 -0.10	8.0	1204400
55	-0.030 -0.104	65	+0.10 -0.10	8.0	0208700
56	-0.030 -0.104	66	+0.10 -0.10	8.0	2138000
56	-0.030 -0.104	71	+0.10 -0.10	12.0	0332600
60	-0.030 -0.104	70	+0.10 -0.10	8.0	0208500
60	-0.030 -0.104	80	+0.10 -0.10	14.0	0391400
63	-0.030 -0.104	75	+0.10 -0.10	9.6	2138100
65	-0.030 -0.104	77	+0.10 -0.10	9.6	2138200
70	-0.030 -0.104	80	+0.10 -0.10	7.5	0057700
70	-0.030 -0.104	82	+0.11 -0.11	9.6	2146800
70	-0.030 -0.104	85	+0.11 -0.11	12.0	0384500
80	-0.030 -0.104	92	+0.11 -0.11	9.6	2138300
90	-0.036 -0.123	102	+0.11 -0.11	9.6	2138400
90	-0.036 -0.123	105	+0.11 -0.11	9.5	2174600
100	-0.036 -0.123	115	+0.11 -0.11	12.0	2138500
100	-0.036 -0.123	120	+0.11 -0.11	15.0	0466100
110	-0.036 -0.123	125	+0.13 -0.13	12.0	0749300
115	-0.036 -0.123	130	+0.13 -0.13	12.0	2136900
150	-0.043 -0.143	170	+0.13 -0.13	14.0	1704300

Notes

Hallite

TECHNICAL DETAILS

METRIC ○ — ● INCH

OPERATING CONDITIONS

MAXIMUM SPEED	4.0 m/sec	12.0 ft/sec
TEMPERATURE RANGE	-30°C + 100°C	-22°F + 212°F
MAXIMUM PRESSURE	300 bar	4500 p.s.i.

MAXIMUM EXTRUSION GAP

Figures show the maximum permissible gap all on one side using minimum rod Ø and maximum clearance Ø.

PRESSURE bar	100	150	250	300
MAXIMUM GAP mm	0.6	0.5	0.45	0.4
PRESSURE p.s.i.	1500	2400	3750	4500

SURFACE ROUGHNESS

	µmRa	µmRt	µinCLA	µinRMS
DYNAMIC SEALING FACE $Ød_1$	0.1 ↔ 0.4	4 max	4 ↔ 16	5 ↔ 18
STATIC SEALING FACE $ØD_1$	1.6 max	10 max	63 max	70 max
STATIC HOUSING FACES L_1	3.2 max	16 max	125 max	140 max

CHAMFERS & RADII

GROOVE SECTION ≤ S mm	3.75	5.50	7.75	10.50	12.25
MIN CHAMFER C mm	2.00	3.00	5.00	7.50	8.00
MAX FILLET RAD r_1 mm	0.40	0.80	1.20	1.50	1.50

TOLERANCES

$Ød_1$	$ØD_1$	L_1 mm
f9	H11	+0.2 -0

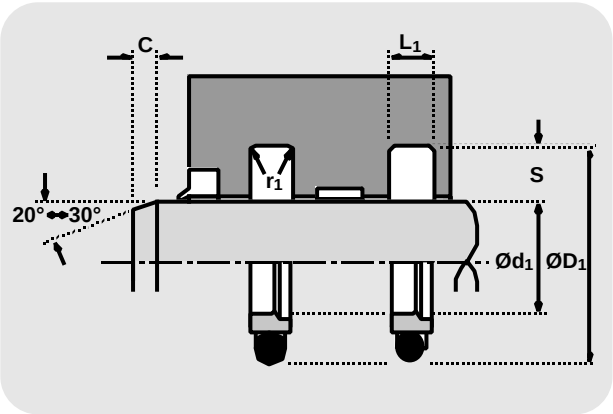

FEATURES

- ULTRA LOW FRICTION
- COMPACT HOUSING
- INCH SIZES AVAILABLE ON REQUEST
- THE SEAL RING COMPONENT IS MACHINED BY HALLITE, THEREFORE ANY SIZE CAN BE CATERED FOR

MATERIALS

Face material - O-Ring	last two digits of part number
Standard material	
15% Glass/PTFE - NBR	_ _ _ _ _ **10**
Material options:	
15% Glass/PTFE - FKM	_ _ _ _ _ **11**
Bronze/PTFE - NBR	_ _ _ _ _ **20**
Bronze/PTFE - FKM	_ _ _ _ _ **21**

Technical details shown are for 15% Glass/PTFE and NBR energiser. Technical details for material options should be requested from Hallite Seals.

DESIGN

Used in tandem, the Hallite 16 rod seal provides the designer with a compact low friction seal for light to medium duty hydraulic cylinders.

It has a special filled PTFE ring with a pre-loaded lip energised by an O ring. The lip is designed to have a contact area with the rod adequate to retain the media at low pressure. As high pressure acts on the O ring it compresses the lip against the rod increasing the contact area and the effectiveness of the seal.

The special PTFE ring has the low frictional properties normally associated with this material but is strengthened by additives to reduce creep. It has a low breakout friction so stick-slip is eliminated.

Standard seals are supplied with a nitrile O ring but other materials can be provided.

For the best results it is recommended two seals are fitted. The PTFE ring should always be mounted with the sealing lip on the pressure side. Sizes above 30mm are easily installed by deforming the PTFE ring into a kidney shape, sizes under 30mm are best installed using a tool, details of which can be provided.

A number of material options can be provided to extend operating conditions. Please ensure that the correct part number is specified for the material option as indicated.

NB: Part numbers suffixed by "‡" indicate housing sizes to meet ISO7425-2.

Part numbers suffixed by "†" are designed to suit popular Asian housings.

Rod Seals

Hallite

16

metric

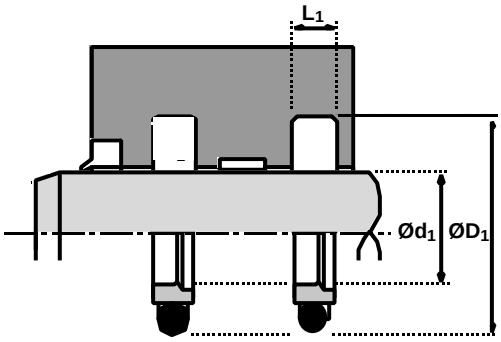

Ød1	TOL f9	ØD1	TOL H11	L1 +0.2-0	PART No.
12	-0.016 -0.059	19.5	+0.13 +0.00	3.2	86106_ _‡
14	-0.016 -0.059	21.5	+0.13 +0.00	3.2	86098_ _‡
15	-0.016 -0.059	22.5	+0.13 +0.00	3.2	86179_ _
16	-0.016 -0.059	23.5	+0.13 +0.00	3.2	66225_ _‡
18	-0.016 -0.059	25.5	+0.13 +0.00	3.2	66226_ _‡
20	-0.020 -0.072	31.0	+0.16 +0.00	4.2	65948_ _‡
22	-0.020 -0.072	29.5	+0.16 +0.00	3.2	862310
22	-0.020 -0.072	33.0	+0.16 +0.00	4.2	65949_ _‡
25	-0.020 -0.072	36.0	+0.16 +0.00	4.2	65950_ _‡
28	-0.020 -0.072	39.0	+0.16 +0.00	4.2	66227_ _‡
30	-0.020 -0.072	41.0	+0.16 +0.00	4.2	65951_ _
32	-0.025 -0.087	43.0	+0.16 +0.00	4.2	65952_ _‡
35	-0.025 -0.087	46.0	+0.16 +0.00	4.2	66228_ _
36	-0.025 -0.087	47.0	+0.16 +0.00	4.2	65953_ _‡
40	-0.025 -0.087	55.5	+0.19 +0.00	6.3	65954_ _
43	-0.025 -0.087	58.5	+0.19 +0.00	6.3	86075_ _
45	-0.025 -0.087	60.5	+0.19 +0.00	6.3	65955_ _
50	-0.025 -0.087	65.5	+0.19 +0.00	6.3	65956_ _
56	-0.030 -0.104	71.5	+0.19 +0.00	6.3	65957_ _
60	-0.030 -0.104	75.5	+0.19 +0.00	6.3	65958_ _
63	-0.030 -0.104	78.5	+0.19 +0.00	6.3	65959_ _‡
65	-0.030 -0.104	80.5	+0.22 +0.00	6.3	65960_ _
70	-0.030 -0.104	85.5	+0.22 +0.00	6.3	65961_ _‡

Ød1	TOL f9	ØD1	TOL H11	L1 +0.2-0	PART No.
75	-0.030 -0.104	90.5	+0.22 +0.00	6.3	65962_ _
78	-0.030 -0.104	93.5	+0.22 +0.00	6.3	86112_ _
80	-0.030 -0.104	95.5	+0.22 +0.00	6.3	65963_ _‡
85	-0.036 -0.123	100.5	+0.22 +0.00	6.3	65964_ _
90	-0.036 -0.123	105.5	+0.22 +0.00	6.3	65965_ _‡
95	-0.036 -0.123	110.5	+0.22 +0.00	6.3	65966_ _
97	-0.036 -0.123	112.5	+0.22 +0.00	6.3	86113_ _
100	-0.036 -0.123	115.5	+0.22 +0.00	6.3	65967_ _‡
105	-0.036 -0.123	120.5	+0.25 +0.00	6.3	86478_ _†
110	-0.036 -0.123	125.5	+0.25 +0.00	6.3	66229_ _‡
115	-0.036 -0.123	130.5	+0.25 +0.00	6.3	66391_ _
120	-0.043 -0.143	135.5	+0.25 +0.00	6.3	86099_ _†
125	-0.043 -0.143	140.5	+0.25 +0.00	6.3	66392_ _‡
130	-0.043 -0.143	145.5	+0.25 +0.00	6.3	86102_ _
135	-0.043 -0.143	150.5	+0.25 +0.00	6.3	86103_ _
140	-0.043 -0.143	155.5	+0.25 +0.00	6.3	66393_ _‡
145	-0.043 -0.143	160.5	+0.25 +0.00	6.3	86156_ _
150	-0.043 -0.143	165.5	+0.25 +0.00	6.3	86157_ _
160	-0.043 -0.143	175.5	+0.25 +0.00	6.3	66394_ _‡
170	-0.043 -0.143	185.5	+0.25 +0.00	6.3	86083_ _
180	-0.043 -0.143	195.5	+0.29 +0.00	6.3	66395_ _‡
190	-0.050 -0.165	205.5	+0.29 +0.00	6.3	86074_ _
200	-0.050 -0.165	221.0	+0.29 +0.00	8.1	66396_ _‡

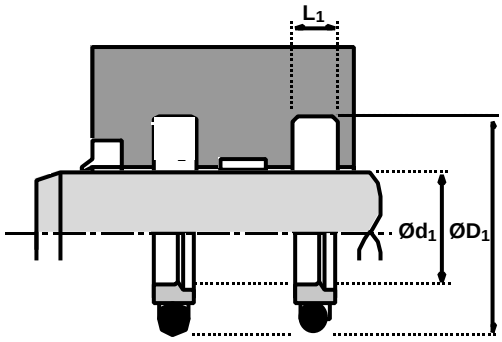

Rod Seals

Hallite 16

metric

Ød1	TOL f9	ØD1	TOL H11	L1 +0.2-0	PART No.
210	-0.050 -0.165	231.0	+0.29 +0.00	8.1	86094_ _
220	-0.050 -0.165	241.0	+0.29 +0.00	8.1	66397_ _‡
240	-0.050 -0.165	261.0	+0.29 +0.00	8.1	86159_ _
250	-0.050 -0.165	271.0	+0.32 +0.00	8.1	66398_ _‡
270	-0.056 -0.186	294.5	+0.32 +0.00	8.1	86069_ _
280	-0.056 -0.186	304.5	+0.32 +0.00	8.1	66399_ _‡
290	-0.056 -0.186	314.5	+0.32 +0.00	8.1	86173_ _
300	-0.056 -0.186	324.5	+0.36 +0.00	8.1	66400_ _
320	-0.062 -0.211	344.5	+0.36 +0.00	8.1	86082_ _‡

Ød1	TOL f9	ØD1	TOL H11	L1 +0.2-0	PART No.
330	-0.062 -0.211	354.5	+0.36 +0.00	8.1	86196_ _
340	-0.062 -0.211	364.5	+0.36 +0.00	8.1	86197_ _
350	-0.062 -0.211	374.5	+0.36 +0.00	8.1	86198_ _
360	-0.062 -0.211	384.5	+0.36 +0.00	8.1	86199_ _‡
370	-0.062 -0.211	394.5	+0.36 +0.00	8.1	86200_ _
380	-0.062 -0.211	404.5	+0.40 +0.00	8.1	86201_ _
390	-0.062 -0.211	414.5	+0.40 +0.00	8.1	86202_ _
400	-0.062 -0.211	424.5	+0.40 +0.00	8.1	86203_ _

Notes

Hallite

TECHNICAL DETAILS

METRIC ○ — ● INCH

OPERATING CONDITIONS

MAXIMUM SPEED	0.5 m/sec	1.5 ft/sec
TEMPERATURE RANGE	-30°C + 100°C	-22°F + 212°F
MAXIMUM PRESSURE	500 bar	7500 p.s.i.

MAXIMUM EXTRUSION GAP

Figures show the maximum permissible gap all on one side ,for rod seals using minimum rod Ø and maximum clearance Ø and for piston seals using the minimum clearance Ø and maximum bore Ø

PRESSURE bar	160	250	400	500
MAXIMUM GAP mm	0.4	0.3	0.2	0.1
PRESSURE p.s.i.	2400	3750	6000	7500
MAXIMUM GAP in	0.016	0.012	0.008	0.004

SURFACE ROUGHNESS

	µmRa	µmRt	µinCLA	µinRMS
DYNAMIC SEALING FACE - ROD $Ød_1$	0.1 ↔ 0.4	4 max	4 ↔ 16	5 ↔ 18
STATIC SEALING FACE - ROD $ØD_1$	1.6 max	10 max	63 max	70 max
DYNAMIC SEALING FACE - PISTON $ØD_1$	0.1 ↔ 0.4	4 max	4 ↔ 16	5 ↔ 18
STATIC SEALING FACE - PISTON $Ød_1$	1.6 max	10 max	63 max	70 max
STATIC HOUSING FACES L_1	3.2 max	16 max	125 max	140 max

CHAMFERS & RADII

GROOVE SECTION ≤ S mm	4.0	5.0	7.5	10.0	12.5	15.0	20.0
MIN CHAMFER C mm	2.0	2.5	4.0	5.0	6.5	7.5	10.0
MAX FILLET RAD r_1 mm	0.2	0.4	0.8	0.8	1.2	1.6	1.6
MAX FILLET RAD r_2 mm	0.4	0.8	1.2	1.2	1.6	2.4	2.4
GROOVE SECTION ≤ S in	0.187	0.250	0.312	0.375	0.500	0.625	0.750
MIN CHAMFER C in	0.093	0.125	0.156	0.187	0.217	0.250	0.375
MAX FILLET RAD r_1 in	0.008	0.016	0.032	0.032	0.032	0.047	0.047
MAX FILLET RAD r_2 in	0.016	0.032	0.047	0.047	0.047	0.062	0.062

TOLERANCES

	$Ød_1$	$ØD_1$	L_1 mm	L_1 in
ROD	f9	Js11	+0.25 -0	+0.010 -0
PISTON	js11	H9	+0.25 -0	+0.010 -0

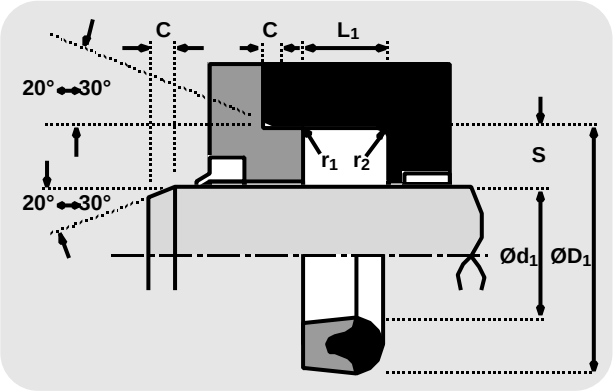

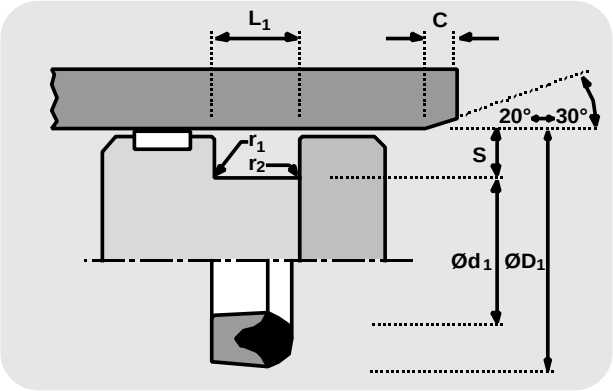

DESIGN

A medium to heavy duty single acting seal, the Hallite 18 has shown itself over many years to be an effective and robust seal in a wide variety of applications.

The seal comprises a rubberised fabric U form base to which is bonded a rubber energiser .

The seal section is pre-loaded by the housing when installed to ensure effective sealing at low pressure. When the pressure increases the rubber energises the U form to increase the sealing area and hence the efficiency of the seal. The strength and durability of the rubberised fabric combines with its ability to retain lubricant keeping friction and wear to a minimum.

In a piston application the Hallite 18 should not be used back to back to make a double acting assembly.

FEATURES

- THE ORIGINAL HALLITE FLUID SEAL
- GENERAL PURPOSE SEAL
- LONG LIFE

NB:
Size lists give "on line" tolerances for rod applications.

Rod/Piston seals

Hallite 18

metric

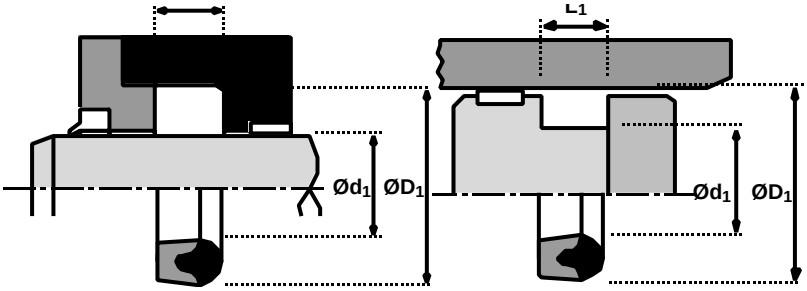

For bore tolerances refer to datasheet.

Ød1	TOL f9	ØD1	TOL Js11	L1 +0.25-0	PART No.
6	-0.013 -0.049	14	+0.05 -0.05	6.0	0202200
8	-0.013 -0.049	16	+0.05 -0.05	6.0	0202400
10	-0.016 -0.059	18	+0.06 -0.06	6.0	0202500
12	-0.016 -0.059	20	+0.07 -0.07	6.0	0202600
12	-0.016 -0.059	25	+0.07 -0.07	10.0	0615800
14	-0.016 -0.059	24	+0.07 -0.07	7.5	0202700
15	-0.016 -0.059	25	+0.07 -0.07	7.5	0202800
16	-0.016 -0.059	26	+0.07 -0.07	7.5	0615900
18	-0.016 -0.059	28	+0.07 -0.07	7.5	0202900
20	-0.020 -0.072	30	+0.07 -0.07	7.5	0200500
22	-0.020 -0.072	30	+0.07 -0.07	6.0	0817600
22	-0.020 -0.072	32	+0.08 -0.08	7.5	0203300
25	-0.020 -0.072	40	+0.08 -0.08	11.0	0472800
28	-0.020 -0.072	43	+0.08 -0.08	11.0	0204300
30	-0.020 -0.072	45	+0.08 -0.08	11.0	0204400
30	-0.020 -0.072	50	+0.08 -0.08	14.0	0282100
32	-0.025 -0.087	47	+0.08 -0.08	11.0	0204600
35	-0.025 -0.087	45	+0.08 -0.08	7.5	0052300
35	-0.025 -0.087	50	+0.08 -0.08	11.0	0474600
36	-0.025 -0.087	44	+0.08 -0.08	6.0	1204900
36	-0.025 -0.087	51	+0.10 -0.10	11.0	0978800
40	-0.025 -0.087	50	+0.08 -0.08	10.5	0202000
40	-0.025 -0.087	55	+0.10 -0.10	11.0	0475000

Ød1	TOL f9	ØD1	TOL Js11	L1 +0.25-0	PART No.
45	-0.025 -0.087	60	+0.10 -0.10	11.0	0979400
45	-0.025 -0.087	65	+0.10 -0.10	14.0	0281700
50	-0.025 -0.087	60	+0.10 -0.10	7.5	0179300
50	-0.025 -0.087	65	+0.10 -0.10	10.0	0208400
50	-0.025 -0.087	65	+0.10 -0.10	11.0	0383800
50	-0.025 -0.087	70	+0.10 -0.10	14.0	0294600
55	-0.030 -0.104	65	+0.10 -0.10	8.0	0242600
56	-0.030 -0.104	76	+0.10 -0.10	14.0	0646100
60	-0.030 -0.104	72	+0.10 -0.10	9.5	1397700
60	-0.030 -0.104	80	+0.10 -0.10	14.0	0294900
63	-0.030 -0.104	83	+0.11 -0.11	14.0	0646300
65	-0.030 -0.104	80	+0.11 -0.11	11.0	0740700
70	-0.030 -0.104	90	+0.11 -0.11	14.0	0296000
75	-0.030 -0.104	90	+0.11 -0.11	12.0	0740600
75	-0.030 -0.104	95	+0.11 -0.11	14.0	0412700
80	-0.030 -0.104	95	+0.11 -0.11	12.0	0732700
80	-0.030 -0.104	100	+0.11 -0.11	14.0	0295100
90	-0.036 -0.123	110	+0.11 -0.11	10.0	0306700
90	-0.036 -0.123	110	+0.11 -0.11	14.0	0071700
90	-0.036 -0.123	110	+0.11 -0.11	15.0	0712400
100	-0.036 -0.123	115	+0.11 -0.11	12.0	0740500
100	-0.036 -0.123	120	+0.11 -0.11	14.0	0296100
100	-0.036 -0.123	125	+0.13 -0.13	19.0	0418600

For bore tolerances
refer to datasheet.

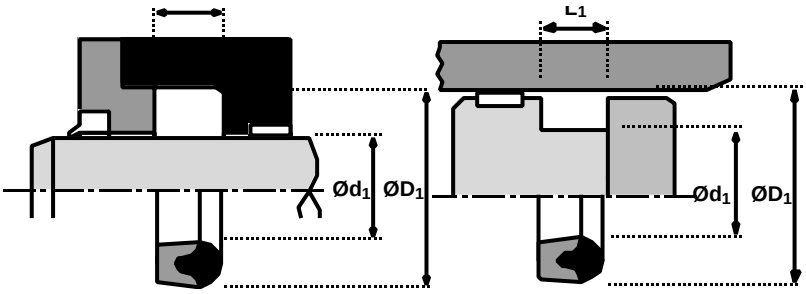

Rod/Piston seals

Hallite 18

metric

Ød1	TOL f9	ØD1	TOL Js11	L1 +0.25-0	PART No.
110	-0.036 -0.123	125	+0.13 -0.13	11.0	0558300
110	-0.036 -0.123	135	+0.13 -0.13	19.0	0304300
115	-0.036 -0.123	135	+0.13 -0.13	14.0	0639900
120	-0.036 -0.123	140	+0.13 -0.13	12.0	0250500
120	-0.036 -0.123	145	+0.13 -0.13	19.0	0070400
125	-0.043 -0.143	150	+0.13 -0.13	19.0	0070500
130	-0.043 -0.143	145	+0.13 -0.13	11.3	0634500
135	-0.043 -0.143	160	+0.13 -0.13	19.0	0080400
140	-0.043 -0.143	160	+0.13 -0.13	14.0	0304600
140	-0.043 -0.143	165	+0.13 -0.13	19.0	0080500
150	-0.043 -0.143	170	+0.13 -0.13	14.0	0303300
160	-0.043 -0.143	180	+0.13 -0.13	15.0	1283100
160	-0.043 -0.143	190	+0.15 -0.15	24.0	0136100
175	-0.043 -0.143	200	+0.15 -0.15	19.0	0838800

Ød1	TOL f9	ØD1	TOL Js11	L1 +0.25-0	PART No.
180	-0.043 -0.143	210	+0.15 -0.15	24.0	0087200
200	-0.050 -0.165	220	+0.15 -0.15	15.0	1284100
200	-0.050 -0.165	230	+0.15 -0.15	24.0	2010000
220	-0.050 -0.165	250	+0.15 -0.15	22.0	0958900
250	-0.050 -0.165	280	+0.16 -0.16	24.0	1055500
270	-0.056 -0.186	300	+0.16 -0.16	24.0	0094800
280	-0.056 -0.186	310	+0.16 -0.16	24.0	0094900
300	-0.056 -0.186	330	+0.18 -0.18	24.0	0095000
320	-0.062 -0.212	360	+0.18 -0.18	30.0	1054000
360	-0.062 -0.212	400	+0.18 -0.18	30.0	1054300
380	-0.062 -0.212	420	+0.20 -0.20	30.0	0095100
400	-0.062 -0.212	440	+0.20 -0.20	30.0	0095200
420	-0.068 -0.223	460	+0.20 -0.20	30.0	0095300

Rod/Piston seals

Hallite 18

inch

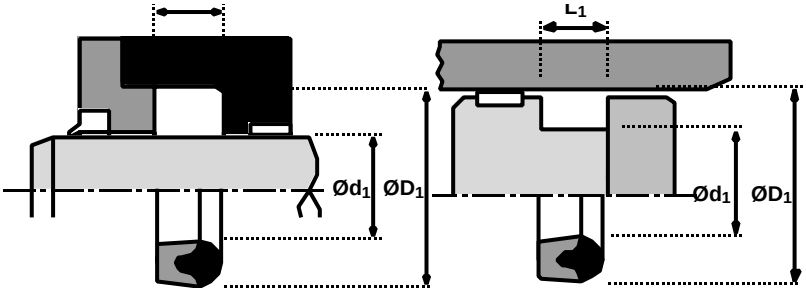

For bore tolerances refer to datasheet.

Ød1	TOL f9	ØD1	TOL Js11	L1 +0.010 -0	PART No.
0.375	-0.0005 -0.0019	0.750	+0.003 -0.003	0.281	1379300
0.500	-0.0006 -0.0023	0.875	+0.003 -0.003	0.281	0406700
0.625	-0.0006 -0.0023	0.875	+0.003 -0.003	0.187	1435600
0.625	-0.0006 -0.0023	1.000	+0.003 -0.003	0.281	1247600
0.750	-0.0008 -0.0028	1.093	+0.003 -0.003	0.281	1364200
0.750	-0.0008 -0.0028	1.250	+0.003 -0.003	0.375	0403700
0.812	-0.0008 -0.0028	1.375	+0.003 -0.003	0.500	0413800
0.875	-0.0008 -0.0028	1.375	+0.003 -0.003	0.375	0401300
1.000	-0.0008 -0.0028	1.375	+0.003 -0.003	0.250	0282600
1.000	-0.0008 -0.0028	1.500	+0.003 -0.003	0.375	0422400
1.125	-0.0008 -0.0028	1.500	+0.003 -0.003	0.375	0525100
1.125	-0.0008 -0.0028	1.625	+0.003 -0.003	0.281	0287000
1.125	-0.0008 -0.0028	1.750	+0.003 -0.003	0.437	0778200
1.250	-0.0010 -0.0034	1.625	+0.003 -0.003	0.281	0282400
1.250	-0.0010 -0.0034	1.875	+0.003 -0.003	0.437	0404100
1.375	-0.0010 -0.0034	2.000	+0.004 -0.004	0.437	0778400
1.500	-0.0010 -0.0034	2.000	+0.004 -0.004	0.281	1447800
1.500	-0.0010 -0.0034	2.125	+0.004 -0.004	0.437	0967600
1.500	-0.0010 -0.0034	2.375	+0.004 -0.004	0.687	0403100
1.625	-0.0010 -0.0034	2.250	+0.004 -0.004	0.437	1432600
1.687	-0.0010 -0.0034	2.500	+0.004 -0.004	0.625	1382600
1.750	-0.0010 -0.0034	2.250	+0.004 -0.004	0.312	1404300
1.750	-0.0010 -0.0034	2.375	+0.004 -0.004	0.437	0939800

Ød1	TOL f9	ØD1	TOL Js11	L1 +0.010 -0	PART No.
1.875	-0.0010 -0.0034	2.500	+0.004 -0.004	0.437	0867200
2.000	-0.0012 -0.0041	2.625	+0.004 -0.004	0.437	1371000
2.000	-0.0012 -0.0041	2.750	+0.004 -0.004	0.562	1369100
2.250	-0.0012 -0.0041	2.875	+0.004 -0.004	0.437	0424300
2.250	-0.0012 -0.0041	3.000	+0.004 -0.004	0.562	1098400
2.375	-0.0012 -0.0041	3.000	+0.004 -0.004	0.469	0716600
2.500	-0.0012 -0.0041	3.000	+0.004 -0.004	0.312	0641200
2.500	-0.0012 -0.0041	3.250	+0.004 -0.004	0.562	0782400
2.750	-0.0012 -0.0041	3.500	+0.004 -0.004	0.562	0437800
3.000	-0.0012 -0.0041	3.750	+0.004 -0.004	0.562	0410500
3.250	-0.0014 -0.0048	4.000	+0.004 -0.004	0.562	1407700
3.500	-0.0014 -0.0048	4.000	+0.004 -0.004	0.375	1468200
3.500	-0.0014 -0.0048	4.250	+0.004 -0.004	0.562	1128800
3.750	-0.0014 -0.0048	4.500	+0.004 -0.004	0.500	1414800
4.000	-0.0014 -0.0048	4.875	+0.005 -0.005	0.656	1424100
4.000	-0.0014 -0.0048	5.000	+0.005 -0.005	0.750	0443000
4.250	-0.0014 -0.0048	5.250	+0.005 -0.005	0.750	0892200
4.500	-0.0014 -0.0048	5.250	+0.005 -0.005	0.469	0447800
4.500	-0.0014 -0.0048	5.500	+0.005 -0.005	0.750	0133200
5.000	-0.0017 -0.0056	6.000	+0.005 -0.005	0.750	1367000
5.250	-0.0017 -0.0056	6.000	+0.005 -0.005	0.562	0487700
5.500	-0.0017 -0.0056	6.500	+0.005 -0.005	0.750	1164100
6.000	-0.0017 -0.0056	7.000	+0.005 -0.005	0.750	1188800

For bore tolerances
refer to datasheet.

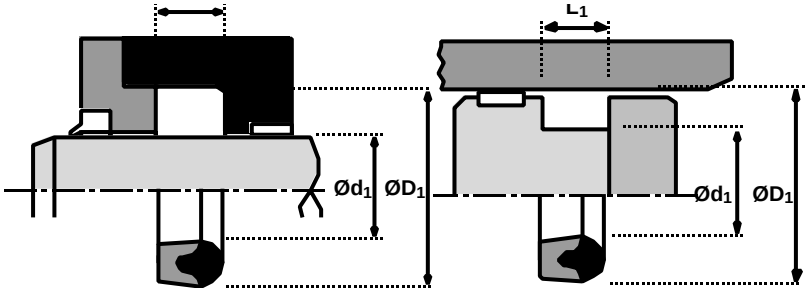

Rod/Piston seals

Hallite 18

inch

Ød1	TOL f9	ØD1	TOL Js11	L1 +0.010 -0	PART No.
6.500	-0.0017 -0.0056	7.000	+0.005 -0.005	0.375	1431600
6.500	-0.0017 -0.0056	7.750	+0.006 -0.006	1.000	1192700
7.000	-0.0017 -0.0056	8.000	+0.006 -0.006	0.875	6501200
7.000	-0.0017 -0.0056	8.125	+0.006 -0.006	0.750	1054100
7.000	-0.0017 -0.0056	8.250	+0.006 -0.006	1.000	1219200
7.500	-0.0020 -0.0065	8.750	+0.006 -0.006	1.000	0418100
8.000	-0.0020 -0.0065	9.000	+0.006 -0.006	0.750	1269400
8.000	-0.0020 -0.0065	9.250	+0.006 -0.006	1.000	0455700
8.500	-0.0020 -0.0065	9.750	+0.006 -0.006	1.000	1332300
9.000	-0.0020 -0.0065	10.250	+0.006 -0.006	1.000	0437500
9.500	-0.0020 -0.0065	10.750	+0.006 -0.006	1.000	1320400
10.000	-0.0022 -0.0073	11.250	+0.006 -0.006	1.000	0452200
10.500	-0.0022 -0.0073	11.750	+0.006 -0.000	1.000	1331300
11.000	-0.0022 -0.0073	12.250	+0.006 -0.006	1.000	1331000
11.500	-0.0022 -0.0073	12.750	+0.007 -0.007	1.000	1331800
12.000	-0.0022 -0.0073	13.250	+0.007 -0.007	1.000	1329100

Ød1	TOL f9	ØD1	TOL Js11	L1 +0.010 -0	PART No.
13.000	-0.0024 -0.0083	14.250	+0.007 -0.007	1.000	0864800
14.000	-0.0024 -0.0083	15.250	+0.007 -0.007	1.208	0174900
14.500	-0.0024 -0.0083	16.000	+0.008 -0.008	1.500	1345000
15.000	-0.0024 -0.0083	17.000	+0.008 -0.008	1.500	1345300
16.500	-0.0027 -0.0088	17.750	+0.008 -0.008	1.000	1318800
17.000	-0.0027 -0.0088	17.750	+0.008 -0.008	0.625	1345900
18.000	-0.0027 -0.0088	19.250	+0.008 -0.008	1.250	1314500
19.000	-0.0027 -0.0088	20.750	+0.009 -0.009	1.312	1342200
20.000	-0.0030 -0.0099	21.500	+0.009 -0.009	1.750	0093600
21.500	-0.0030 -0.0099	23.500	+0.009 -0.009	1.750	0150500
23.000	-0.0030 -0.0099	25.000	+0.010 -0.010	1.500	0158700
27.000	-0.0031 -0.0110	29.000	+0.010 -0.010	1.500	2003500
30.000	-0.0031 -0.0110	32.000	+0.011 -0.011	1.500	2109700
38.000	-0.0034 -0.0124	39.500	+0.011 -0.011	1.125	0159200

Notes

Hallite

21

TECHNICAL DETAILS

METRIC ○ INCH ●

OPERATING CONDITIONS

MAXIMUM SPEED	0.5 m/sec	1.5 ft/sec
TEMPERATURE RANGE	-30°C + 100°C	-22°F + 212°F
MAXIMUM PRESSURE	400 bar	6000 p.s.i.

MAXIMUM EXTRUSION GAP

Figures show the maximum permissible gap all on one side using minimum rod Ø and maximum clearance Ø.

PRESSURE bar	100	160	250	400
MAXIMUM GAP mm	1.0	0.9	0.8	0.6
PRESSURE p.s.i.	1500	2400	3750	6000
MAXIMUM GAP in	0.040	0.036	0.032	0.024

SURFACE ROUGHNESS

	µmRa	µmRt	µinCLA	µinRMS
DYNAMIC SEALING FACE $Ød_1$	0.1 ↔ 0.4	4 max	4 ↔ 16	5 ↔ 18
STATIC SEALING FACE $ØD_1$	1.6 max	10 max	63 max	70 max
STATIC HOUSING FACES L_1	3.2 max	16 max	125 max	140 max

CHAMFERS & RADII

GROOVE SECTION ≤ S mm	4.0	5.0	7.5	10.0	12.5	15.0
MIN CHAMFER C mm	2.0	2.5	4.0	5.0	6.5	7.5
MAX FILLET RAD r_2 mm	0.2	0.4	0.8	0.8	1.2	1.6
GROOVE SECTION ≤ S in	0.187	0.250	0.312	0.375		
MIN CHAMFER C in	0.093	0.125	0.156	0.187		
MAX FILLET RAD r_2 in	0.008	0.016	0.032	0.032		

TOLERANCES

$Ød_1$	$ØD_1$	L_1 mm	L_1 in
f9	Js11	+0.25 -0	+0.010 -0

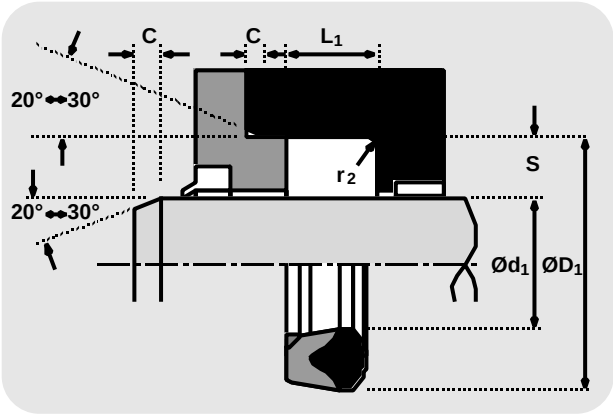

FEATURES

- HIGH PRESSURE CAPABILITY
- CONTAMINATION RESISTANT
- GENERAL PURPOSE SEAL
- LONG LIFE

NB: Part numbers suffixed by "‡" indicate housing sizes to meet ISO5597.

DESIGN

The Hallite 21 is a compact, low friction seal with the advantage of an internal anti-extrusion ring.

A rubberised fabric U ring, which gives strength and durability, and a rubber header are moulded together forming the seal. It is designed to have a controlled pre-load across the angled rubber lips, which are accurately machine trimmed, to ensure a good seal at low pressure. The seal becomes more effective as the pressure increases and the rubberised fabric deforms to the housing, increasing the seal contact area. The surface of the fabric has pockets which retain lubrication to reduce friction and wear.

The range has a reinforced plastic anti-extrusion ring at the internal heel of the seal, to protect it against damage by extrusion, which enables the designer to use a large clearance. Where possible, triangular anti-extrusion rings are used, but in some cases a rectangular section may be supplied. Certain sizes are designed to suit housing requirements of ISO 5597.

The proportions of the range have been determined to give a satisfactory performance when used with the recommended operating conditions.

Many other sizes are available outside this range, please contact your local Hallite sales office for additional information.

Rod seals

Hallite

21

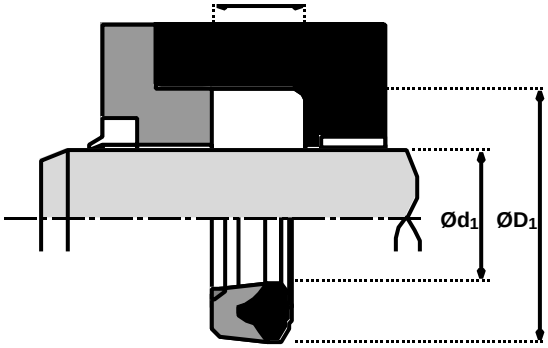

metric

Ød1	TOL f9	ØD1	TOL Js11	L1 +0.25-0	PART No.
20	-0.020 -0.072	30	+0.08 -0.08	8.0	2176120‡
28	-0.020 -0.072	38	+0.08 -0.08	8.0	6583220‡
30	-0.020 -0.072	45	+0.08 -0.08	9.0	2176420
32	-0.025 -0.087	42	+0.08 -0.08	8.0	6583320‡
36	-0.025 -0.087	46	+0.08 -0.08	8.0	6583420‡
40	-0.025 -0.087	50	+0.08 -0.08	8.0	6583520‡
40	-0.025 -0.087	55	+0.10 -0.10	10.5	2176920
45	-0.025 -0.087	55	+0.10 -0.10	8.0	6583620‡
50	-0.025 -0.087	60	+0.10 -0.10	8.0	2192722‡
55	-0.030 -0.104	65	+0.10 -0.10	10.5	2177320
56	-0.030 -0.104	71	+0.10 -0.10	12.5	6583720‡
63	-0.030 -0.104	78	+0.10 -0.10	12.5	2192822‡
70	-0.030 -0.104	85	+0.11 -0.11	12.5	6583820‡

Ød1	TOL f9	ØD1	TOL Js11	L1 +0.25-0	PART No.
75	-0.030 -0.104	95	+0.11 -0.11	14.0	0896220
80	-0.030 -0.104	95	+0.11 -0.11	12.5	2192922‡
90	-0.036 -0.123	105	+0.11 -0.11	12.5	6583920‡
100	-0.036 -0.123	120	+0.11 -0.11	14.0	2178720
100	-0.036 -0.123	120	+0.11 -0.11	16.0	6581720‡
110	-0.036 -0.123	130	+0.13 -0.13	16.0	2193022‡
125	-0.043 -0.143	145	+0.13 -0.13	16.0	6581820‡
140	-0.043 -0.143	160	+0.13 -0.13	16.0	2193122‡
160	-0.043 -0.143	176	+0.13 -0.13	12.0	2120120
160	-0.043 -0.143	185	+0.15 -0.15	20.0	6581920‡
180	-0.043 -0.143	205	+0.15 -0.15	20.0	6582020‡
200	-0.050 -0.165	225	+0.15 -0.15	20.0	6582220‡
220	-0.050 -0.165	250	+0.15 -0.15	25.0	6592120‡

inch

Ød1	TOL f9	ØD1	TOL Js11	L1 +0.010 -0	PART No.
1.250	-0.020 -0.072	1.750	+0.08 -0.08	0.375	2187920
1.500	-0.020 -0.072	2.000	+0.08 -0.08	0.470	2186720
1.750	-0.020 -0.072	2.125	+0.08 -0.08	0.276	0064620
2.000	-0.020 -0.072	2.500	+0.08 -0.08	0.375	2187020

Ød1	TOL f9	ØD1	TOL Js11	L1 +0.010 -0	PART No.
2.000	-0.020 -0.072	2.750	+0.08 -0.08	0.625	2186820
2.250	-0.020 -0.072	2.750	+0.08 -0.08	0.375	2163820
2.500	-0.020 -0.072	3.000	+0.08 -0.08	0.312	2187120
2.625	-0.020 -0.072	3.375	+0.08 -0.08	0.562	2186920

Hallite

33

TECHNICAL DETAILS

METRIC ○ — INCH ●

OPERATING CONDITIONS

MAXIMUM SPEED	4.0 m/sec	12.0 ft/sec
TEMPERATURE RANGE	-30°C + 100°C	-22°F + 212°F

SURFACE ROUGHNESS

	µmRa	µmRt	µinCLA	µinRMS
DYNAMIC SEALING FACE $Ød_1$	0.1 ↔ 0.4	4 max	4 ↔ 16	5 ↔ 18
STATIC SEALING FACE $ØD_1$ $ØD_2$	2.5 max	16 max	100 max	111 max
STATIC HOUSING FACES L_1	2.5 max	16 max	100 max	111 max

RADII

ROD DIAMETER $Ød_1$ mm	≤ 50	≤ 90	≤ 200	> 200
MAX FILLET RAD r_1 mm	0.4	0.4	0.4	0.8
MAX FILLET RAD r_2 mm	0.2	0.4	0.6	0.8
ROD DIAMETER $Ød_1$ in	all			
MAX FILLET RAD r_1 in	0.010			
MAX FILLET RAD r_2 in	0.020			

TOLERANCES

	$Ød_1$	$ØD_1$	$ØD_2$	L_1
mm	f9	H11	H11	+0.2 -0
in	f9 +0.020 +0.010		±0.005	+0.020 +0.010

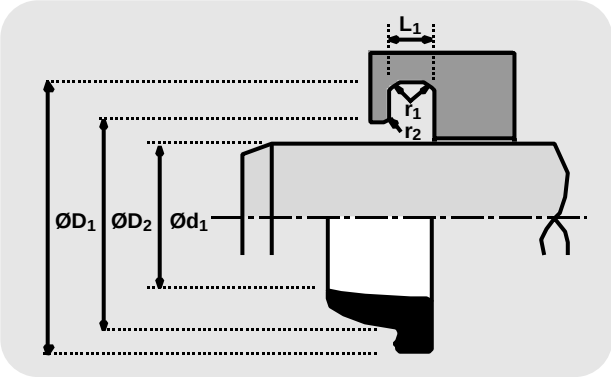

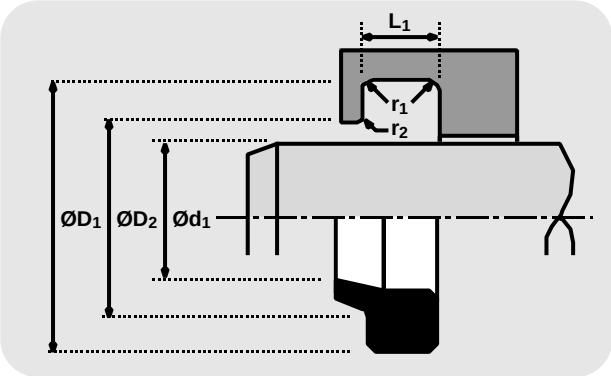

METRIC INCH

Hallite 33: the metric and inch profiles differ as illustrated above.

DESIGN

The Hallite 33 wiper has a lip designed to remove lightly adhered dirt from the rod i.e. mud, dust or moisture.

The wiper is manufactured from a hard nitrile rubber suitable for installing in a grooved housing. Rod diameters (±d $_1$) of 20mm and below require a two piece housing .

To prevent dirt passing the outside of the wiper and to reduce the pumping action, the outside diameter is an interference fit with the housing. Certain sizes of the standard Hallite 33 metric range are suitable for ISO 6195 Housing Type A.

It should also be noted that the Hallite 33 inch profile differs from the metric profile, and is also available in Hythane 181.

FEATURES

- GENERAL PURPOSE SEAL
- PRECISION TRIMMED SEALING LIP
- WIDE SIZE RANGES
- EFFECTIVE SEAL ON HOUSING AS WELL AS ROD

NB: Part numbers suffixed by ‡‡" indicate housing sizes to meet ISO6195A. Many of the metric sizes are also available as polyester wipers - see Hallite 38.

Wipers

Hallite 33

metric

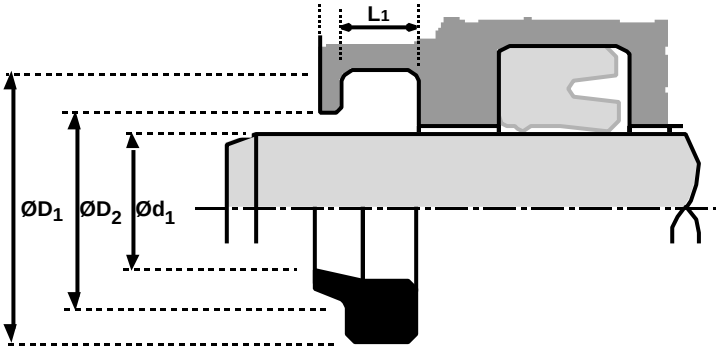

Ød1	TOL f9	ØD1	TOL H11	ØD2	TOL H11	L1 +0.2 - 0	L2	PART No.
12	-0.016 -0.059	20.0	+0.13 +0.00	16.0	+0.11 +0.00	4.0	6.0	2232500
14	-0.016 -0.059	22.0	+0.13 +0.00	18.0	+0.11 +0.00	4.0	6.0	2232600
16	-0.016 -0.059	24.0	+0.13 +0.00	20.0	+0.13 +0.00	4.0	6.0	2232800
18	-0.016 -0.059	26.0	+0.13 +0.00	22.0	+0.13 +0.00	4.0	6.0	2232900
20	-0.020 -0.072	28.0	+0.13 +0.00	24.0	+0.13 +0.00	4.0	6.0	2233000
22	-0.020 -0.072	30.0	+0.13 +0.00	26.0	+0.13 +0.00	4.0	6.0	2233100
25	-0.020 -0.072	33.0	+0.16 +0.00	29.0	+0.13 +0.00	4.0	6.0	2233200
25	-0.020 -0.072	33.0	+0.16 +0.00	30.5	+0.16 +0.00	5.0	6.4	6586200‡
28	-0.020 -0.072	36.0	+0.16 +0.00	32.0	+0.16 +0.00	4.0	6.0	2233300
28	-0.020 -0.072	36.0	+0.16 +0.00	33.5	+0.16 +0.00	5.0	6.4	6586300‡
30	-0.020 -0.072	42.0	+0.16 +0.00	36.0	+0.16 +0.00	6.0	9.0	2233400
32	-0.025 -0.087	40.0	+0.16 +0.00	37.5	+0.16 +0.00	5.0	6.4	6586400‡
32	-0.025 -0.087	44.0	+0.16 +0.00	38.0	+0.16 +0.00	6.0	9.0	2233500
35	-0.025 -0.087	47.0	+0.16 +0.00	41.0	+0.16 +0.00	6.0	9.0	2233600
36	-0.025 -0.087	44.0	+0.16 +0.00	41.5	+0.16 +0.00	5.0	6.4	6586500‡
36	-0.025 -0.087	48.0	+0.16 +0.00	42.0	+0.16 +0.00	6.0	9.0	2233700
40	-0.025 -0.087	48.0	+0.16 +0.00	45.5	+0.16 +0.00	5.0	6.4	6586600‡
40	-0.025 -0.087	52.0	+0.19 +0.00	46.0	+0.16 +0.00	6.0	9.0	2233800
42	-0.025 -0.087	54.0	+0.19 +0.00	48.0	+0.16 +0.00	6.0	9.0	2233900
45	-0.025 -0.087	53.0	+0.19 +0.00	50.5	+0.19 +0.00	5.0	6.4	6586700‡
45	-0.025 -0.087	57.0	+0.19 +0.00	51.0	+0.19 +0.00	6.0	9.0	2234000
50	-0.025 -0.087	58.0	+0.19 +0.00	55.5	+0.19 +0.00	5.0	6.4	6586800‡
50	-0.025 -0.087	62.0	+0.19 +0.00	55.0	+0.19 +0.00	6.0	9.0	2234200

Hallite 33

metric

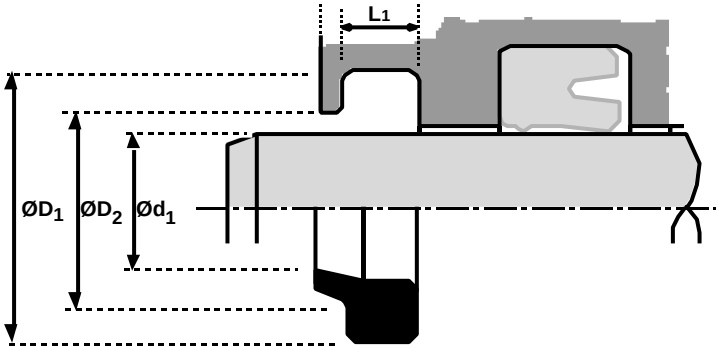

Ød1	TOL f9	ØD1	TOL H11	ØD2	TOL H11	L1 +0.2 - 0	L2	PART No.
55	-0.030 -0.104	67.0	+0.19 +0.00	61.0	+0.19 +0.00	6.0	9.0	2234300
56	-0.030 -0.104	66.0	+0.19 +0.00	63.0	+0.19 +0.00	6.3	8.1	6586900‡
56	-0.030 -0.104	68.0	+0.19 +0.00	62.0	+0.19 +0.00	6.0	9.0	2234400
60	-0.030 -0.104	72.0	+0.19 +0.00	66.0	+0.19 +0.00	6.0	9.0	2234500
63	-0.030 -0.104	73.0	+0.19 +0.00	70.0	+0.19 +0.00	6.3	8.1	6587000‡
63	-0.030 -0.104	75.0	+0.19 +0.00	69.0	+0.19 +0.00	6.0	9.0	2234600
65	-0.030 -0.104	77.0	+0.19 +0.00	71.0	+0.19 +0.00	6.0	9.0	2234700
70	-0.030 -0.104	80.0	+0.22 +0.00	77.0	+0.19 +0.00	6.3	8.1	6587100‡
70	-0.030 -0.104	82.0	+0.22 +0.00	76.0	+0.19 +0.00	6.0	9.0	2234800
80	-0.030 -0.104	90.0	+0.22 +0.00	87.0	+0.22 +0.00	6.3	8.1	6587200‡
90	-0.036 -0.123	100.0	+0.22 +0.00	97.0	+0.22 +0.00	6.3	8.1	6587300‡
90	-0.036 -0.123	106.0	+0.22 +0.00	98.0	+0.22 +0.00	8.0	12.0	2235200
100	-0.036 -0.123	115.0	+0.22 +0.00	110.0	+0.22 +0.00	9.5	12.5	6587400‡
100	-0.036 -0.123	116.0	+0.22 +0.00	108.0	+0.22 +0.00	8.0	12.0	2235300
105	-0.036 -0.123	121.0	+0.25 +0.00	113.0	+0.22 +0.00	8.0	12.0	2235400
110	-0.036 -0.123	125.0	+0.25 +0.00	120.0	+0.22 +0.00	9.5	12.5	6587500‡
125	-0.043 -0.143	140.0	+0.25 +0.00	135.0	+0.25 +0.00	9.5	12.5	6587600‡
140	-0.043 -0.143	155.0	+0.25 +0.00	150.0	+0.25 +0.00	9.5	12.5	6587700‡
140	-0.043 -0.143	156.0	+0.25 +0.00	148.0	+0.25 +0.00	8.0	12.0	1222800
150	-0.043 -0.143	166.0	+0.25 +0.00	158.0	+0.25 +0.00	8.0	12.0	1222900
160	-0.043 -0.143	175.0	+0.25 +0.00	170.0	+0.25 +0.00	9.5	12.5	6587800‡
160	-0.043 -0.143	176.0	+0.25 +0.00	168.0	+0.25 +0.00	8.0	12.0	1223000
180	-0.043 -0.143	200.0	+0.29 +0.00	190.0	+0.29 +0.00	10.0	15.0	1226300

Wipers

Hallite 33

metric

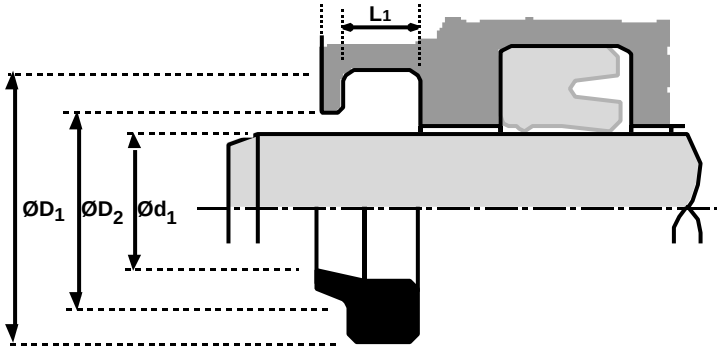

Ød1	TOL f9	ØD1	TOL H11	ØD2	TOL H11	L1 +0.2 - 0	L2	PART No.
190	-0.050 -0.165	210.0	+0.29 +0.00	200.0	+0.29 +0.00	10.0	15.0	1226400
200	-0.050 -0.165	215.0	+0.29 +0.00	210.0	+0.29 +0.00	9.5	12.5	6588000‡
200	-0.050 -0.165	220.0	+0.29 +0.00	210.0	+0.29 +0.00	10.0	15.0	1226500
220	-0.050 -0.165	240.0	+0.29 +0.00	233.5	+0.29 +0.00	12.5	16.6	6588100‡
250	-0.056 -0.186	270.0	+0.32 +0.00	263.5	+0.32 +0.00	12.5	16.6	6588200‡

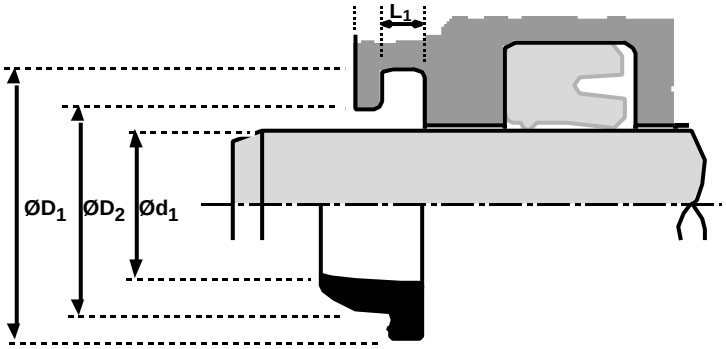

Wipers

Hallite 33

inch

Ød1	TOL f9	ØD1	TOL +0.020 +0.010	ØD2	TOL ±0.005	L1 +0.020 +0.010	L2	PART No.
0.500	-0.0006 -0.0023	0.900	+0.020 +0.010	0.700	+0.005 -0.005	0.125	0.250	1464100
0.625	-0.0006 -0.0023	1.025	+0.020 +0.010	0.828	+0.005 -0.005	0.125	0.250	1470700
0.750	-0.0008 -0.0028	1.150	+0.020 +0.010	0.950	+0.005 -0.005	0.125	0.250	1347700
0.875	-0.0008 -0.0028	1.275	+0.020 +0.010	1.075	+0.005 -0.005	0.125	0.250	1056700
1.000	-0.0008 -0.0028	1.400	+0.020 +0.010	1.200	+0.005 -0.005	0.125	0.250	1456300
1.125	-0.0008 -0.0028	1.625	+0.020 +0.010	1.425	+0.005 -0.005	0.125	0.375	1476700
1.250	-0.0010 -0.0034	1.750	+0.020 +0.010	1.550	+0.005 -0.005	0.125	0.375	1453100
1.375	-0.0010 -0.0034	1.875	+0.020 +0.010	1.675	+0.005 -0.005	0.125	0.375	1471800
1.500	-0.0010 -0.0034	2.000	+0.020 +0.010	1.800	+0.005 -0.005	0.125	0.375	0696900
1.625	-0.0010 -0.0034	2.125	+0.020 +0.010	1.925	+0.005 -0.005	0.125	0.375	0269600
1.750	-0.0010 -0.0034	2.250	+0.020 +0.010	2.050	+0.005 -0.005	0.125	0.375	0266400
1.875	-0.0010 -0.0034	2.375	+0.020 +0.010	2.175	+0.005 -0.005	0.125	0.375	0230700
2.000	-0.0012 -0.0041	2.500	+0.020 +0.010	2.300	+0.005 -0.005	0.125	0.375	0228100
2.250	-0.0012 -0.0041	2.750	+0.020 +0.010	2.550	+0.005 -0.005	0.125	0.375	0851100
2.500	-0.0012 -0.0041	3.000	+0.020 +0.010	2.800	+0.005 -0.005	0.125	0.375	1450000
2.750	-0.0012 -0.0041	3.250	+0.020 +0.010	3.050	+0.005 -0.005	0.125	0.375	2222400
3.000	-0.0012 -0.0041	3.500	+0.020 +0.010	3.300	+0.005 -0.005	0.125	0.375	0951300
3.250	-0.0014 -0.0048	4.000	+0.020 +0.010	3.650	+0.005 -0.005	0.187	0.500	1472500
3.375	-0.0014 -0.0048	4.125	+0.020 +0.010	3.775	+0.005 -0.005	0.187	0.500	1474200
3.500	-0.0014 -0.0048	4.250	+0.020 +0.010	3.900	+0.005 -0.005	0.187	0.500	1445000
4.000	-0.0014 -0.0048	4.750	+0.020 +0.010	4.400	+0.005 -0.005	0.187	0.500	1453300
4.500	-0.0014 -0.0048	5.250	+0.020 +0.010	4.900	+0.005 -0.005	0.187	0.500	1613600
5.000	-0.0017 -0.0056	5.750	+0.020 +0.010	5.400	+0.005 -0.005	0.187	0.500	0258600

Wipers

Hallite

33

inch

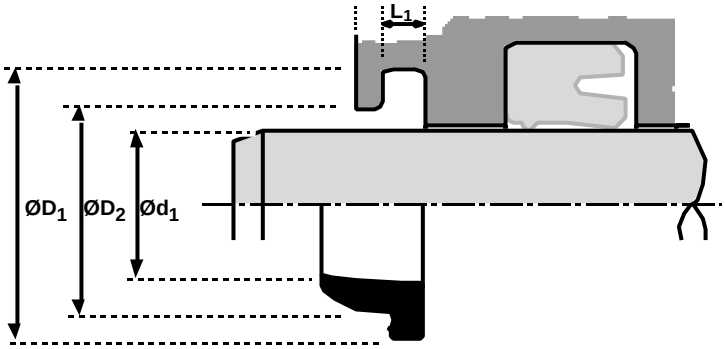

Ød1	TOL f9	ØD1	TOL +0.020 +0.010	ØD2	TOL ±0.005	L1 +0.020 +0.010	L2	PART No.
5.500	-0.0017 -0.0056	6.250	+0.020 +0.010	5.900	+0.005 -0.005	0.187	0.500	0223500
6.000	-0.0017 -0.0056	6.750	+0.020 +0.010	6.400	+0.005 -0.005	0.187	0.500	0222500
6.500	-0.0017 -0.0056	7.500	+0.020 +0.010	7.000	+0.005 -0.005	0.250	0.625	1613100
7.000	-0.0017 -0.0056	8.000	+0.020 +0.010	7.500	+0.005 -0.005	0.250	0.625	1614600
8.000	-0.0020 -0.0065	9.000	+0.020 +0.010	8.500	+0.005 -0.005	0.250	0.625	0786500

Wipers

Hallite

38

TECHNICAL DETAILS

METRIC ○ — INCH ●

OPERATING CONDITIONS

MAXIMUM SPEED	4.0 m/sec	12.0 ft/sec
TEMPERATURE RANGE	-40°C + 120°C	-40°F + 250°F

SURFACE ROUGHNESS

	µmRa	µmRt	µinCLA	µinRMS
DYNAMIC SEALING FACE $Ød_1$	0.1 ↔ 0.4	4 max	4 ↔ 16	5 ↔ 18
STATIC SEALING FACE $ØD_1$, $ØD_2$	1.6 max	10 max	100 max	70 max
STATIC HOUSING FACES L_1	3.2 max	16 max	125 max	140 max

CHAMFERS & RADII

ROD DIAMETER $Ød_1$ mm	≤ 50	≤ 90	≤ 200	> 200
MAX FILLET RAD r_1 mm	0.4	0.4	0.4	0.8
MAX FILLET RAD r_2 mm	0.2	0.4	0.6	0.8

TOLERANCES

	$Ød_1$	$ØD_1$	$ØD_2$	L_1
mm	f9	H11	H11	+0.5 -0

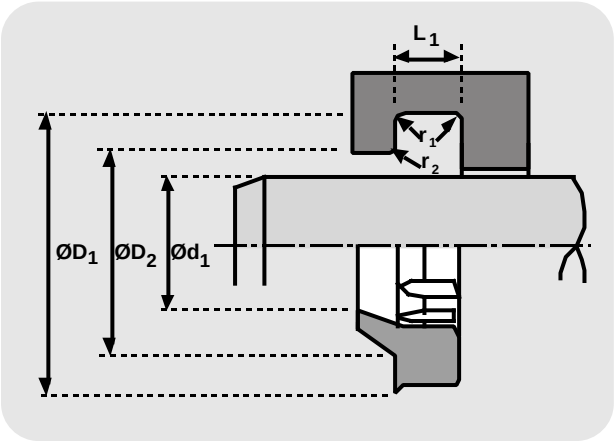

DESIGN

The Hallite 38 wiper has been designed so that the proportions of the wiping lip ensure it maintains contact with the rod surface to remove heavily deposited mud, ice etc. The outside diameter contacts the housing and has a sealing lip to prevent moisture entering the groove. A polyester based material is used to provide a tough abrasion resistant wiper for the difficult conditions usually found in mining or earth moving applications. All the range can be used with a split housing, however, the majority can be installed in a blind housing with care.

FEATURES

- OUTSIDE LIP FOR EFFECTIVE HOUSING SEAL
- PRESSURE RELIEF RIBS
- EFFECTIVE SCRAPING LIP
- PRECISION TRIMMED WIPING LIP

NB: Part numbers suffixed by "‡" indicate housing sizes to meet ISO 6195A.

Wipers

Hallite 38

metric

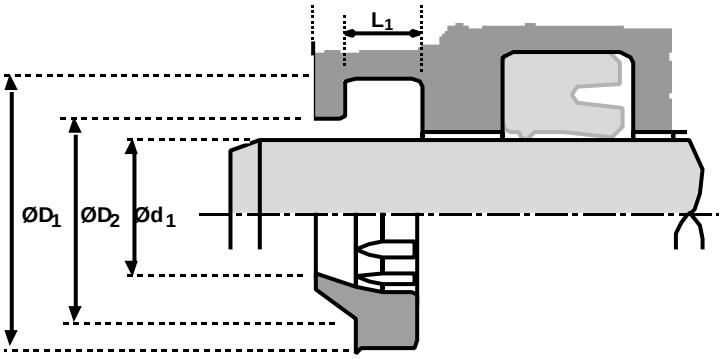

Ød1	TOL f9	ØD1	TOL H11	ØD2	TOL H11	L1 +0.2 - 0	L2	PART No.
18	-0.016 -0.059	24.0	+0.13 +0.00	21.0	+0.13 +0.00	5.0	7.0	4392000
20	-0.020 -0.072	28.0	+0.13 +0.00	25.5	+0.13 +0.00	5.0	8.0	4321900‡
22	-0.020 -0.072	30.0	+0.13 +0.00	27.5	+0.13 +0.00	5.0	8.0	4322000‡
25	-0.020 -0.072	33.0	+0.16 +0.00	30.5	+0.16 +0.00	5.0	8.0	6617700‡
28	-0.020 -0.072	36.0	+0.16 +0.00	33.5	+0.16 +0.00	5.0	8.0	6617800‡
30	-0.020 -0.072	38.0	+0.16 +0.00	35.5	+0.16 +0.00	5.0	8.0	4419200
30	-0.020 -0.072	41.2	+0.16 +0.00	37.0	+0.16 +0.00	7.5	10.0	4528900
32	-0.025 -0.087	40.0	+0.16 +0.00	37.5	+0.16 +0.00	5.0	8.0	6617900‡
35	-0.025 -0.087	43.0	+0.16 +0.00	40.5	+0.16 +0.00	5.0	8.0	4724800
36	-0.025 -0.087	44.0	+0.16 +0.00	41.5	+0.16 +0.00	5.0	8.0	6618000‡
40	-0.025 -0.087	48.0	+0.16 +0.00	45.5	+0.16 +0.00	5.0	8.0	6618100‡
41.3	-0.025 -0.087	49.3	+0.16 +0.00	46.8	+0.16 +0.00	5.0	8.0	4599900
45	-0.025 -0.087	53.0	+0.19 +0.00	50.5	+0.19 +0.00	5.0	8.0	6618200‡
50	-0.025 -0.087	58.0	+0.19 +0.00	55.5	+0.19 +0.00	5.0	8.0	6618300‡
50	-0.025 -0.087	58.6	+0.19 +0.00	53.0	+0.19 +0.00	5.3	7.0	4300400
50	-0.025 -0.087	60.6	+0.19 +0.00	53.0	+0.19 +0.00	5.3	7.0	4458000
56	-0.030 -0.104	66.0	+0.19 +0.00	63.0	+0.19 +0.00	6.3	10.0	6618400‡
56	-0.030 -0.104	66.6	+0.19 +0.00	59.0	+0.19 +0.00	5.3	7.0	4458100
60	-0.030 -0.104	70.0	+0.19 +0.00	66.0	+0.19 +0.00	5.3	7.0	4386200
60	-0.030 -0.104	70.0	+0.19 +0.00	67.0	+0.19 +0.00	6.3	10.0	4270200
60	-0.030 -0.104	70.6	+0.19 +0.00	63.0	+0.19 +0.00	5.3	7.0	4456400
63	-0.030 -0.104	73.0	+0.19 +0.00	70.0	+0.19 +0.00	6.3	10.0	6618500‡
63	-0.030 -0.104	73.6	+0.19 +0.00	66.0	+0.19 +0.00	5.3	7.0	4283600

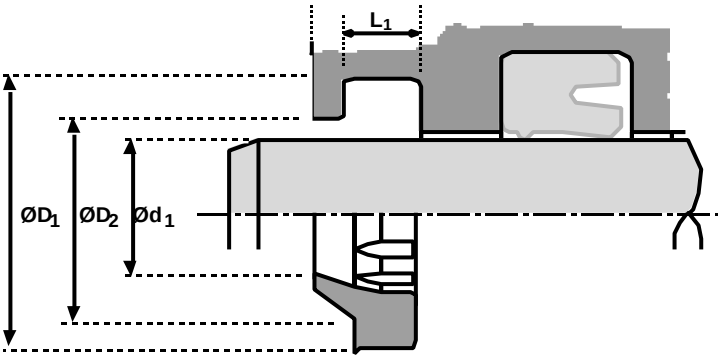

Wipers

Hallite 38

metric

Ød1	TOL f9	ØD1	TOL H11	ØD2	TOL H11	L1 +0.2 - 0	L2	PART No.
65	-0.030 -0.104	75.0	+0.19 +0.00	72.0	+0.19 +0.00	6.3	10.0	4343800
70	-0.030 -0.104	80.0	+0.19 +0.00	77.0	+0.19 +0.00	6.3	10.0	6618600‡
70	-0.030 -0.104	80.6	+0.22 +0.00	73.0	+0.19 +0.00	5.3	7.0	4454000
70	-0.030 -0.104	82.2	+0.22 +0.00	76.0	+0.19 +0.00	7.2	12.0	4243900
75	-0.030 -0.104	83.6	+0.22 +0.00	78.0	+0.19 +0.00	5.3	7.0	4539500
75	-0.030 -0.104	85.0	+0.22 +0.00	82.0	+0.22 +0.00	6.3	10.0	4532500
75	-0.030 -0.104	87.2	+0.22 +0.00	81.0	+0.22 +0.00	7.2	12.0	4384400
80	-0.030 -0.104	90.0	+0.22 +0.00	87.0	+0.22 +0.00	6.3	10.0	6618700‡
80	-0.030 -0.104	91.0	+0.22 +0.00	85.0	+0.22 +0.00	7.5	11.0	4493200
80	-0.030 -0.104	92.2	+0.22 +0.00	86.0	+0.22 +0.00	7.2	12.0	4242800
82.6	-0.036 -0.123	92.2	+0.22 +0.00	85.7	+0.22 +0.00	5.3	7.1	4415500
85	-0.036 -0.123	93.6	+0.22 +0.00	88.0	+0.22 +0.00	5.3	7.0	4292100
85	-0.036 -0.123	98.0	+0.22 +0.00	92.0	+0.22 +0.00	7.5	11.5	4332800
88	-0.036 -0.123	100.2	+0.22 +0.00	94.0	+0.22 +0.00	7.2	12.0	4269400
90	-0.036 -0.123	100.0	+0.22 +0.00	97.0	+0.22 +0.00	6.3	10.0	6618800‡
90	-0.036 -0.123	102.2	+0.22 +0.00	96.0	+0.22 +0.00	7.2	12.0	4324500
95	-0.036 -0.123	107.2	+0.22 +0.00	101.0	+0.22 +0.00	7.2	12.0	6667600
100	-0.036 -0.123	110.6	+0.22 +0.00	104.0	+0.22 +0.00	5.3	7.0	4300200
100	-0.036 -0.123	112.2	+0.22 +0.00	106.0	+0.22 +0.00	7.2	12.0	4324600
100	-0.036 -0.123	115.0	+0.22 +0.00	110.0	+0.22 +0.00	9.5	14.0	6618900‡
101.6	-0.036 -0.123	116.6	+0.22 +0.00	111.6	+0.22 +0.00	9.5	14.0	6619010
105	-0.036 -0.123	113.0	+0.22 +0.00	110.5	+0.22 +0.00	5.0	8.0	4290300
105	-0.036 -0.123	120.0	+0.22 +0.00	112.0	+0.22 +0.00	7.2	12.0	4539100

Wipers

Hallite 38

metric

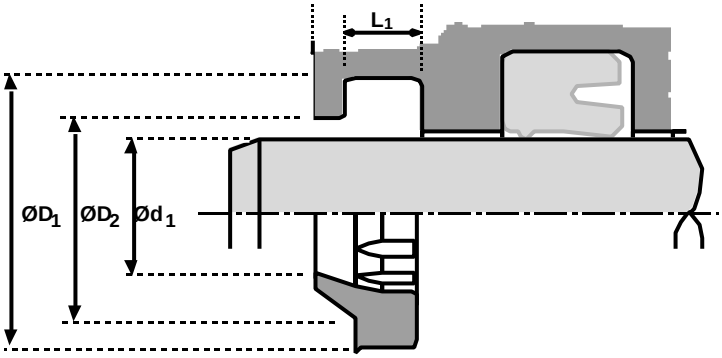

Ød1	TOL f9	ØD1	TOL H11	ØD2	TOL H11	L1 +0.2 - 0	L2	PART No.
110	-0.036 -0.123	122.2	+0.25 +0.00	116.0	+0.22 +0.00	7.2	12.0	4459200
110	-0.036 -0.123	125.0	+0.25 +0.00	120.0	+0.22 +0.00	9.5	14.0	6619000‡
115	-0.036 -0.123	127.2	+0.25 +0.00	121.0	+0.25 +0.00	7.2	12.0	4324800
120	-0.036 -0.123	132.2	+0.25 +0.00	126.0	+0.25 +0.00	7.2	12.0	4454300
120	-0.036 -0.123	135.0	+0.25 +0.00	130.0	+0.25 +0.00	9.5	14.0	4385600
125	-0.043 -0.143	133.0	+0.25 +0.00	130.8	+0.25 +0.00	5.3	7.0	4393000
125	-0.043 -0.143	137.2	+0.25 +0.00	131.0	+0.25 +0.00	7.7	12.0	4233500
125	-0.043 -0.143	140.0	+0.25 +0.00	135.0	+0.25 +0.00	9.5	14.0	6619100‡
128	-0.043 -0.143	143.0	+0.25 +0.00	138.0	+0.25 +0.00	9.5	14.0	4581800
130	-0.043 -0.143	142.2	+0.25 +0.00	136.0	+0.25 +0.00	7.2	12.0	4304300
132	-0.043 -0.143	144.2	+0.25 +0.00	138.0	+0.25 +0.00	7.2	12.0	4269500
135	-0.043 -0.143	150.0	+0.25 +0.00	145.0	+0.25 +0.00	9.5	14.0	4278700
140	-0.043 -0.143	152.2	+0.25 +0.00	146.0	+0.25 +0.00	7.7	12.0	4324900
140	-0.043 -0.143	155.0	+0.25 +0.00	150.0	+0.25 +0.00	9.5	14.0	6619200‡
145	-0.043 -0.143	160.0	+0.25 +0.00	155.0	+0.25 +0.00	9.5	14.0	4560600
150	-0.043 -0.143	162.2	+0.25 +0.00	156.0	+0.25 +0.00	7.7	12.0	4278900
150	-0.043 -0.143	165.0	+0.25 +0.00	157.6	+0.25 +0.00	10.2	16.0	4342500
150	-0.043 -0.143	165.0	+0.25 +0.00	158.8	+0.25 +0.00	7.2	12.0	6668500
150	-0.043 -0.143	165.0	+0.25 +0.00	158.6	+0.25 +0.00	7.2	12.0	6668500
150	-0.043 -0.143	166.0	+0.25 +0.00	161.0	+0.25 +0.00	8.0	12.0	4336700
155	-0.043 -0.143	163.0	+0.25 +0.00	160.5	+0.25 +0.00	5.0	8.0	4290200
155	-0.043 -0.143	167.2	+0.25 +0.00	161.0	+0.25 +0.00	7.7	12.0	4288200
155	-0.043 -0.143	175.0	+0.25 +0.00	165.0	+0.25 +0.00	10.2	18.0	4226400

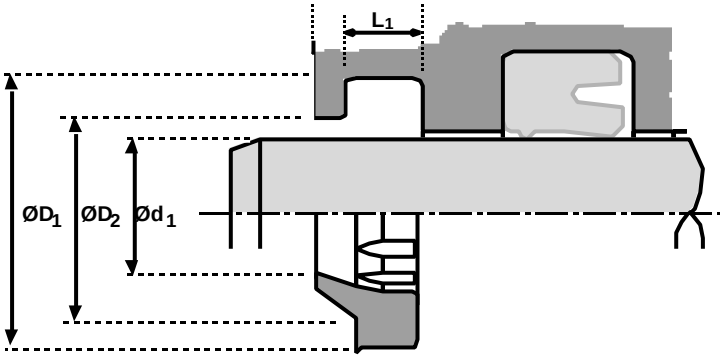

Wipers

Hallite 38

metric

Ød1	TOL f9	ØD1	TOL H11	ØD2	TOL H11	L1 +0.2 - 0	L2	PART No.
160	-0.043 -0.143	172.2	+0.25 +0.00	166.0	+0.25 +0.00	7.7	12.0	4405700
160	-0.043 -0.143	175.0	+0.25 +0.00	170.0	+0.25 +0.00	9.5	14.0	6619300‡
160	-0.043 -0.143	175.0	+0.25 +0.00	167.0	+0.25 +0.00	10.2	16.0	4454100
165	-0.043 -0.143	180.0	+0.25 +0.00	175.0	+0.25 +0.00	9.5	14.0	4537000
170	-0.043 -0.143	180.6	+0.25 +0.00	174.0	+0.25 +0.00	5.3	7.0	4732300
170	-0.043 -0.143	182.2	+0.29 +0.00	176.0	+0.25 +0.00	7.7	12.0	4233600
177	-0.043 -0.143	192.0	+0.29 +0.00	187.0	+0.29 +0.00	9.5	14.0	4287900
180	-0.043 -0.143	195.0	+0.29 +0.00	190.0	+0.29 +0.00	9.5	14.0	6619400‡
180	-0.043 -0.143	200.0	+0.29 +0.00	190.0	+0.29 +0.00	10.2	18.0	4460900
195	-0.050 -0.165	210.0	+0.29 +0.00	202.5	+0.29 +0.00	10.2	16.0	4325100
200	-0.050 -0.165	208.6	+0.29 +0.00	203.0	+0.29 +0.00	5.3	7.0	4391600
200	-0.050 -0.165	215.0	+0.29 +0.00	210.0	+0.29 +0.00	9.5	14.0	6619500‡
200	-0.050 -0.165	220.0	+0.29 +0.00	210.0	+0.29 +0.00	10.2	18.0	4387100
205	-0.050 -0.165	220.0	+0.29 +0.00	215.0	+0.29 +0.00	9.5	14.0	4560500
210	-0.050 -0.165	225.0	+0.29 +0.00	220.0	+0.29 +0.00	9.5	14.0	4598000
210	-0.050 -0.165	226.0	+0.29 +0.00	221.0	+0.29 +0.00	8.0	12.0	4336600
210	-0.050 -0.165	230.0	+0.29 +0.00	220.0	+0.29 +0.00	10.2	18.0	4325300
212	-0.050 -0.165	232.0	+0.29 +0.00	225.5	+0.29 +0.00	12.5	18.0	4293900
220	-0.050 -0.165	235.0	+0.29 +0.00	227.6	+0.29 +0.00	10.2	16.0	4325400
220	-0.050 -0.165	240.0	+0.29 +0.00	233.5	+0.29 +0.00	12.5	18.0	6619600‡
225	-0.050 -0.165	240.0	+0.29 +0.00	235.0	+0.29 +0.00	9.5	14.0	4287800
225	-0.050 -0.165	245.0	+0.29 +0.00	235.0	+0.29 +0.00	10.2	18.0	4325500
230	-0.050 -0.165	238.6	+0.29 +0.00	233.0	+0.29 +0.00	5.3	7.0	4514000

Wipers

Hallite 38

metric

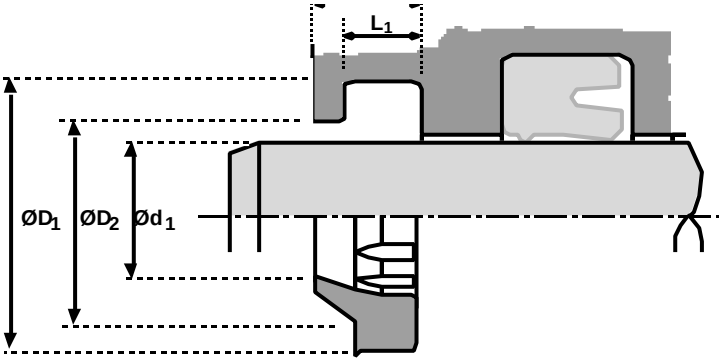

Ød1	TOL f9	ØD1	TOL H11	ØD2	TOL H11	L1 +0.2 - 0	L2	PART No.
230	-0.050 -0.165	246.0	+0.29 +0.00	240.7	+0.29 +0.00	7.5	12.0	4290700
235	-0.050 -0.165	255.0	+0.32 +0.00	245.0	+0.29 +0.00	10.2	18.0	4325700
240	-0.050 -0.165	260.0	+0.32 +0.00	250.0	+0.29 +0.00	10.2	18.0	4520900
245	-0.050 -0.165	265.0	+0.32 +0.00	258.5	+0.32 +0.00	12.5	18.0	4539600
250	-0.050 -0.165	270.0	+0.32 +0.00	260.0	+0.32 +0.00	10.2	18.0	4460100
250	-0.050 -0.165	270.0	+0.32 +0.00	263.5	+0.32 +0.00	12.5	18.0	6619700‡
255	-0.050 -0.165	270.0	+0.32 +0.00	265.0	+0.32 +0.00	9.5	14.0	4578200
260	-0.056 -0.186	275.0	+0.32 +0.00	270.0	+0.32 +0.00	9.5	14.0	4573100
260	-0.056 -0.186	280.0	+0.32 +0.00	270.5	+0.32 +0.00	10.2	18.0	4325900
265	-0.056 -0.186	285.0	+0.32 +0.00	275.0	+0.32 +0.00	10.2	15.0	4560400
270	-0.056 -0.186	278.6	+0.32 +0.00	273.0	+0.32 +0.00	5.3	7.0	4391700
280	-0.056 -0.186	295	+0.32 +0.00	290.0	+0.32 +0.00	9.5	14.0	4716100
285	-0.056 -0.186	305.0	+0.32 +0.00	298.5	+0.32 +0.00	12.5	18.0	4537100
288	-0.056 -0.186	308.0	+0.32 +0.00	301.5	+0.32 +0.00	10.2	18.0	4265300
290	-0.056 -0.186	310.0	+0.32 +0.00	303.5	+0.32 +0.00	12.5	18.0	4467300
295	-0.056 -0.186	315.0	+0.32 +0.00	308.5	+0.32 +0.00	12.5	18.0	4598100
300	-0.056 -0.186	316.0	+0.36 +0.00	310.7	+0.32 +0.00	7.5	12.0	4290800
300	-0.056 -0.186	320.0	+0.36 +0.00	313.5	+0.32 +0.00	12.5	18.0	4525300
305	-0.056 -0.186	325.0	+0.36 +0.00	318.5	+0.36 +0.00	12.5	18.0	4473200
320	-0.062 -0.212	340.0	+0.36 +0.00	330.0	+0.36 +0.00	10.2	18.0	4454200
330	-0.062 -0.212	346.0	+0.36 +0.00	340.7	+0.36 +0.00	7.5	12.0	4587300
340	-0.062 -0.212	360	+0.36 +0.00	350	+0.36 +0.00	10.2	18.0	4732500
350	-0.062 -0.212	370	+0.36 +0.00	360.0	+0.36 +0.00	10.2	14.0	4717900

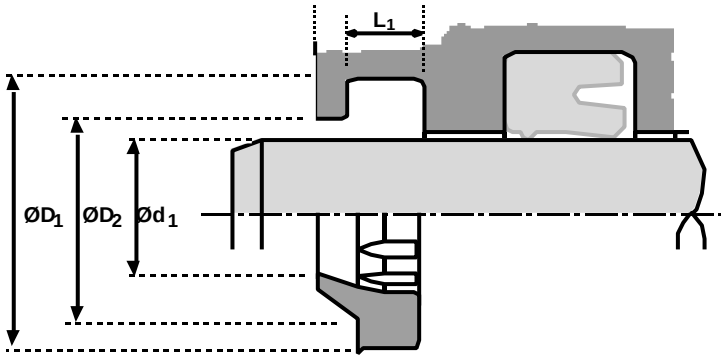

Wipers

Hallite 38

metric

Ød1	TOL f9	ØD1	TOL H11	ØD2	TOL H11	L1 +0.2 - 0	L2	PART No.
355	-0.062 -0.212	375.0	+0.36 +0.00	365.0	+0.36 +0.00	10.2	18.0	4578300
370	-0.062 -0.212	390.0	+0.36 +0.00	383.5	+0.36 +0.00	12.5	18.0	4579800

Notes

Piston seals

Hallite

50

TECHNICAL DETAILS

METRIC ○ — INCH ●

OPERATING CONDITIONS

MAXIMUM SPEED	0.5 m/sec	1.5 ft/sec
TEMPERATURE RANGE	-30°C + 100°C	-22°F + 212°F
MAXIMUM PRESSURE	350 bar	5000 p.s.i.

SURFACE ROUGHNESS	µmRa	µmRt	µinCLA	µinRMS
DYNAMIC SEALING FACE $ØD_1$	0.1 ↔ 0.4	4 max	4 ↔ 16	5 ↔ 18
STATIC SEALING FACE $Ød_1$ $Ød_2$	1.6 max	10 max	63 max	70 max
STATIC HOUSING FACES $Ød_3$ L_1 L_2	3.2 max	16 max	125 max	140 max

CHAMFERS & RADII

GROOVE SECTION ≤ S mm	4.0	5.0	7.5	10.0
MIN CHAMFER C mm	2.0	2.5	4.0	5.0
MAX FILLET RAD r_1 mm	0.4	0.4	0.4	0.4
MAX FILLET RAD r_2 mm	0.4	0.4	0.4	0.4

TOLERANCES

	$ØD_1$	$Ød_1$	$Ød_2$	$Ød_3$	L_1	L_2
mm	H10	h9	h9	h11	+0.35 +0.1	+0.1 -0

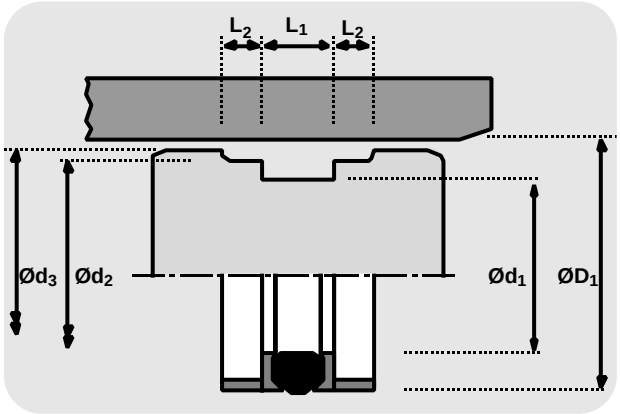

DESIGN

The Hallite 50 is a double acting seal designed for light duty applications using either one piece or split pistons to ISO 6547 housings.

It comprises of a rubber seal, two split support rings and two split bearings, located either side of the seal. The nitrile rubber seal has proved itself to be extremely wear resistant in service.
It is designed to be compressed by the housing to ensure a low pressure seal and when pressurised be protected from extrusion damage by the extending lips of the support ring. A tough flexible polymer is used for the support ring which is scarf cut for assembly and to protect the seal from damage.

A rectangular reinforced nylon bearing completes the assembly and provides the seal and piston with support and guidance.

The proportions of this range of piston seals have been determined to give a satisfactory performance when used with the recommended operating conditions.

Note : Other sizes of this design of seal are shown under Hallite 53, 64 and 68.

FEATURES

- COMPACT GROOVE DESIGN
- EASY ASSEMBLY
- POSITIVE NO DRIFT SEAL

NB: Part numbers suffixed by ‡‡" indicate housing sizes to meet ISO 6547.

Piston seals

Hallite 50

metric

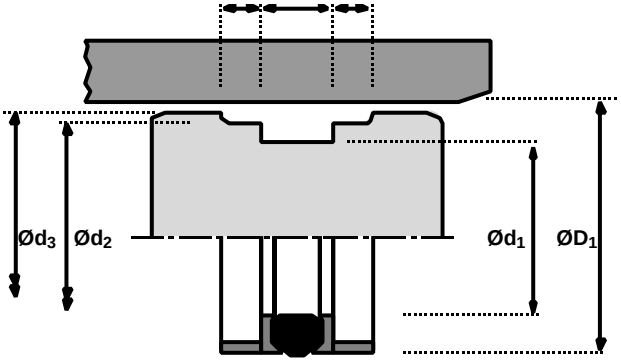

$ØD_1$	TOL H10	$Ød_1$	TOL h9	$Ød_2$	TOL h9	$Ød_3$	TOL h11	L_1 + 0.35 + 0.1	L_2 + 0.1 - 0	PART No.
25	+0.08 +0.00	17	+0.00 -0.04	22.0	+0.000 -0.052	24.0	+0.00 -0.13	10.0	4.0	6607810‡
32	+0.10 +0.00	24	+0.00 -0.05	29.0	+0.000 -0.052	31.0	+0.00 -0.16	10.0	4.0	6607910‡
40	+0.10 +0.00	32	+0.00 -0.06	37.0	+0.000 -0.062	39.0	+0.00 -0.16	10.0	4.0	6608010‡
50	+0.10 +0.00	40	+0.00 -0.06	47.0	+0.000 -0.062	49.0	+0.00 -0.16	12.5	4.0	6608110‡
63	+0.12 +0.00	53	+0.00 -0.07	60.0	+0.000 -0.074	62.0	+0.00 -0.19	12.5	4.0	2199513‡
80	+0.12 +0.00	65	+0.00 -0.07	76.0	+0.000 -0.074	78.5	+0.00 -0.19	20.0	5.0	6608210‡
100	+0.14 +0.00	85	+0.00 -0.09	96.0	+0.000 -0.087	98.5	+0.00 -0.22	20.0	5.0	6608310‡
125	+0.16 +0.00	105	+0.00 -0.09	120.0	+0.000 -0.087	123.0	+0.00 -0.25	25.0	6.3	6608410‡
140	+0.16 +0.00	120	+0.00 -0.09	135.0	+0.000 -0.087	138.0	+0.00 -0.25	25.0	6.3	2317030
160	+0.16 +0.00	140	+0.00 -0.10	155.0	+0.000 -0.100	158.0	+0.00 -0.25	25.0	6.3	6608510‡

Piston seals

Hallite

51

TECHNICAL DETAILS

METRIC ○ — INCH ●

OPERATING CONDITIONS

MAXIMUM SPEED	0.5 m/sec	1.5 ft/sec
TEMPERATURE RANGE	-30°C + 100°C	-22°F + 212°F
MAXIMUM PRESSURE	700 bar	10,000 p.s.i.

MAXIMUM EXTRUSION GAP

Figures show the maximum permissible gap all on one side using the minimum clearance Ø and maximum bore Ø

PRESSURE bar	160	250	400	700
MAXIMUM GAP mm	0.35	0.3	0.2	0.1
PRESSURE p.s.i.	2400	3750	6000	10,000

SURFACE ROUGHNESS

	µmRa	µmRt	µinCLA	µinRMS
DYNAMIC SEALING FACE $ØD_1$	0.1 ↔ 0.4	4 max	4 ↔ 16	5 ↔ 18
STATIC SEALING FACE $Ød_1$	1.6 max	10 max	63 max	70 max
STATIC HOUSING FACES L_1	3.2 max	16 max	125 max	140 max

CHAMFERS & RADII

GROOVE SECTION ≤ S mm	7.5	10.0	12.5	15.0
MIN CHAMFER C mm	4.0	5.0	6.5	7.5
MAX FILLET RAD r_2 mm	0.8	1.2	1.6	1.6

TOLERANCES

	$ØD_1$	$Ød_1$	$Ød_3$		L_1	
mm	H9	h11	+0	-0.3	+0.25	-0

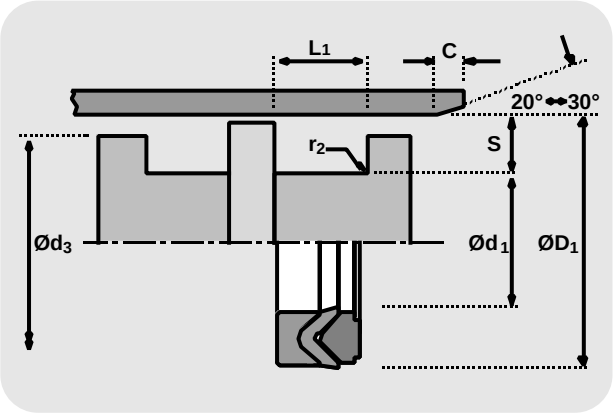

DESIGN

The Hallite 51 is a heavy duty piston seal which, when installed in pairs, provides an excellent double acting piston design. It is particularly suitable for difficult operating conditions such as pressure surging, vibration or some misalignment.

The seal is an assembly of three parts, a male adaptor, a V ring and a female adaptor. Both the V ring and the female adaptor are made from rubberised fabric which has durability and strength, it also retains lubricant at the sliding surfaces so friction and wear are kept to a minimum. The V ring being the primary seal is more flexible than the adaptor which supports it and prevents extrusion damage. At higher pressures the adaptor deforms and becomes a secondary seal.

The polyacetal male adaptor has grooves across the face to ensure pressure is evenly applied to the V ring.

FEATURES

- EFFECTIVE SEAL FOR EXTREME APPLICATIONS
- PRECISION MOULDED VEE PACKS
- HIGH LOAD CAPABILITY
- PRESSURE ACTIVATING GROOVES

Piston seals

Hallite

51

metric

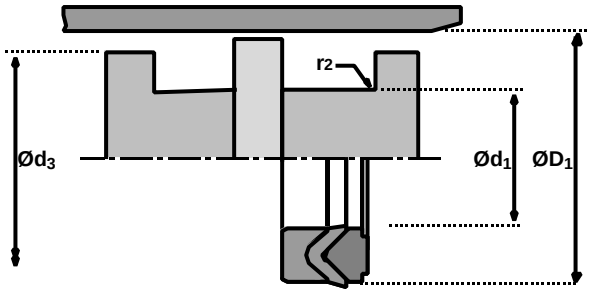

ØD1	TOL H9	Ød1	TOL h11	Ød3 Tol +0 -0.3	L1 +0.25-0	PART No.
30	+0.05 +0.00	20	+0.00 -0.13	29.0	9.30	4208310
40	+0.06 +0.00	25	+0.00 -0.13	39.0	11.50	4208010
50	+0.06 +0.00	35	+0.00 -0.16	49.0	11.50	4207610
55	+0.07 +0.00	40	+0.00 -0.16	54.0	11.50	4207110
60	+0.07 +0.00	45	+0.00 -0.16	59.0	11.50	4207210
63	+0.07 +0.00	48	+0.00 -0.16	62.0	13.00	4207410
70	+0.07 +0.00	50	+0.00 -0.16	68.5	15.20	4208210
80	+0.07 +0.00	60	+0.00 -0.19	78.5	15.20	4208110
90	+0.09 +0.00	70	+0.00 -0.19	88.5	21.20	4207710
100	+0.09 +0.00	80	+0.00 -0.19	98.5	21.20	4207510
110	+0.09 +0.00	90	+0.00 -0.22	108.5	21.20	4207910

ØD1	TOL H9	Ød1	TOL h11	Ød3 Tol +0 -0.3	L1 +0.25-0	PART No.
125	+0.10 +0.00	100	+0.00 -0.22	123.5	25.80	4207810
140	+0.10 +0.00	115	+0.00 -0.22	138.5	25.80	4208410
150	+0.10 +0.00	120	+0.00 -0.22	148.0	29.00	4208510
160	+0.10 +0.00	130	+0.00 -0.25	158.0	29.00	4208710
180	+0.10 +0.00	150	+0.00 -0.25	178.0	31.50	4208610
200	+0.12 +0.00	170	+0.00 -0.25	198.0	33.50	4209010
225	+0.12 +0.00	195	+0.00 -0.29	223.0	33.50	6582110
250	+0.12 +0.00	220	+0.00 -0.29	248.0	33.50	6582310
275	+0.13 +0.00	245	+0.00 -0.29	273.0	33.50	6582410
300	+0.13 +0.00	270	+0.00 -0.32	298.0	33.50	6582510
320	+0.14 +0.00	290	+0.00 -0.36	318.0	33.50	6582610

Piston seals

Hallite

52

TECHNICAL DETAILS

METRIC ○ — INCH ●

OPERATING CONDITIONS

MAXIMUM SPEED	0.8 m/sec	2.4 ft/sec
TEMPERATURE RANGE	-30°C + 100°C	-22°F + 212°F
MAXIMUM PRESSURE	600 bar	9000 p.s.i.

MAXIMUM EXTRUSION GAP

Figures show the maximum permissible gap all on one side using the minimum clearance Ø and maximum bore Ø

PRESSURE bar	160	250	400	600
MAXIMUM GAP mm	0.35	0.3	0.2	0.1
PRESSURE p.s.i.	2400	3750	6000	9000

SURFACE ROUGHNESS

	µmRa	µmRt	µinCLA	µinRMS
DYNAMIC SEALING FACE $ØD_1$	0.1 ↔ 0.4	4 max	4 ↔ 16	5 ↔ 18
STATIC SEALING FACE $Ød_1$	1.6 max	10 max	63 max	70 max
STATIC HOUSING FACES L_1	3.2 max	16 max	125 max	140 max

CHAMFERS & RADII

GROOVE SECTION ≤ S mm	5.0	7.5	10.0	12.5	15.0
MIN CHAMFER C mm	2.5	4.0	5.0	6.5	7.5
MAX FILLET RAD r_2 mm	0.8	0.8	0.8	1.2	1.6

TOLERANCES

	$ØD_1$	$Ød_1$	$Ød_3$		L_1	
mm	H9	h11	+0	-0.3	+0.3	-0

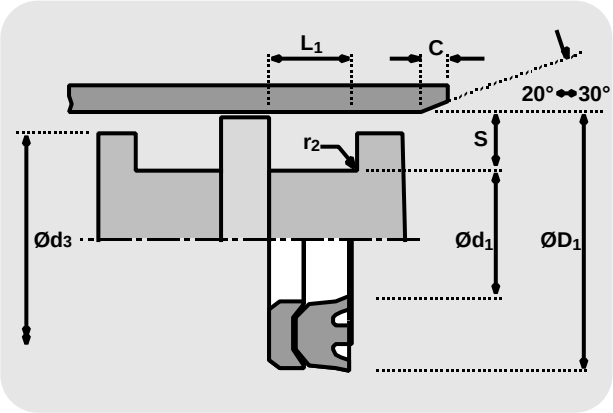

DESIGN

The Hallite 52 is a two piece piston seal for heavy duty applications which, when installed in pairs, provides an excellent double-acting piston design. It is suitable for difficult operating conditions such as pressure surging, vibration or some misalignment .

Both parts are manufactured from rubberised fabric which gives strength and durability and retains lubrication to keep friction low and reduce wear.

By extending the centre of the seal past the sealing edges, they are protected from damage should inter-seal pressure force the seal against the housing wall. Grooves across the protruding face allow pressure to reach both sealing edges.

The support ring is manufactured from a hard rubberised fabric to protect the seal from extrusion damage. The ‚U„ shape of the ring provides a secondary seal as pressure deforms the lips to increase the sealing area.

NB: Part numbers suffixed by ‡‡" indicate housing sizes to meet ISO 5597.

FEATURES

- EFFECTIVE SEAL FOR EXTREME APPLICATIONS
- PRECISION MOULDED VEE PACKS
- HIGH LOAD CAPABILITY
- PRESSURE ACTIVATING GROOVES

Piston seals

Hallite

52

metric

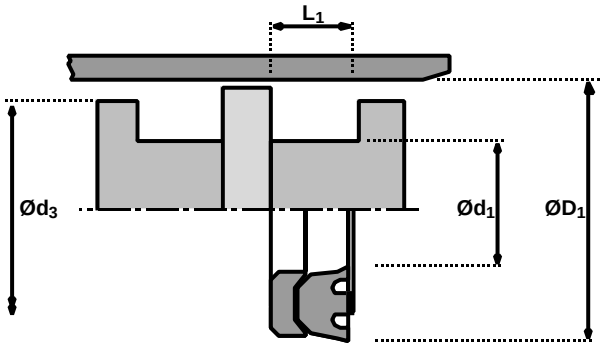

ØD1	TOL H9	Ød1	TOL h11	Ød3 Tol +0 -0.3	L1 +0.3 -0	PART No.
25	+0.05 +0.00	15	+0.00 -0.11	24.0	6.30	6619810‡
32	+0.06 +0.00	20	+0.00 -0.13	31.0	7.80	1791610
32	+0.06 +0.00	22	+0.00 -0.13	31.0	6.30	6619910‡
40	+0.06 +0.00	25	+0.00 -0.13	39.0	10.00	2149810
40	+0.06 +0.00	30	+0.00 -0.13	39.0	6.30	6620010‡
45	+0.06 +0.00	30	+0.00 -0.13	44.0	10.00	2150010
50	+0.06 +0.00	35	+0.00 -0.16	49.0	9.50	2150210‡
55	+0.07 +0.00	40	+0.00 -0.16	54.0	10.00	2150410
60	+0.07 +0 00	45	+0.00 -0.16	59.0	10.00	2150610
63	+0.07 +0.00	48	+0.00 -0.16	62.0	9.50	2150810‡
70	+0.07 +0 00	50	+0.00 -0.16	68.5	13.00	2151010
80	+0.07 +0.00	60	+0.00 -0.19	78.5	12.50	2151210‡
90	+0.09 +0.00	70	+0.00 -0.19	88.5	13.00	2151410

ØD1	TOL H9	Ød1	TOL h11	Ød3 Tol +0 -0.3	L1 +0.3 -0	PART No.
100	+0.09 +0.00	80	+0.00 -0.19	98.5	12.50	2151610‡
110	+0.09 +0.00	90	+0.00 -0.22	108.5	13.00	2151810
125	+0.10 +0.00	100	+0.00 -0.22	123.5	16.00	2152010‡
140	+0.10 +0.00	115	+0.00 -0.22	138.5	16.20	2152210
160	+0.10 +0.00	130	+0.00 -0.25	158.0	19.80	2152410
160	+0.10 +0.00	135	+0.00 -0.25	158.0	16.00	6620110‡
180	+0.10 +0.00	150	+0.00 -0.25	178.0	19.80	2152610
200	+0.12 +0.00	170	+0.00 -0.25	198.0	20.00	2152810‡
225	+0.12 +0.00	195	+0.00 -0.29	223.0	19.80	2197010
250	+0.12 +0.00	220	+0.00 -0.29	248.0	20.00	2197210‡
275	+0.13 +0.00	245	+0.00 -0.29	273.0	19.80	2197410
300	+0.13 +0.00	270	+0.00 -0.32	298.0	19.80	2188310

Piston seals

Hallite

53

TECHNICAL DETAILS

METRIC ○ — INCH ●

OPERATING CONDITIONS

MAXIMUM SPEED	0.5 m/sec	1.5 ft/sec
TEMPERATURE RANGE	-30°C + 100°C	-22°F + 212°F
MAXIMUM PRESSURE	500 bar	7500 p.s.i.

SURFACE ROUGHNESS

	µmRa	µmRt	µinCLA	µinRMS
DYNAMIC SEALING FACE $ØD_1$	0.1 ↔ 0.4	4 max	4 ↔ 16	5 ↔ 18
STATIC SEALING FACE $Ød_1$ $Ød_2$	1.6 max	10 max	63 max	70 max
STATIC HOUSING FACES $Ød_3$ L_1 L_2	3.2 max	16 max	125 max	140 max

CHAMFERS & RADII

GROOVE SECTION ≤ S mm	5.0	7.5	8.0	10.0	12.5	15.0
MIN CHAMFER C mm	2.4	4.0	5.0	5.0	6.5	7.5
MAX FILLET RAD r_1 mm	0.4	0.4	0.4	0.4	0.8	0.8
MAX FILLET RAD r_2 mm	0.4	0.4	0.4	0.4	0.8	0.8
GROOVE SECTION ≤ S in	0.312	0.375	0.500			
MIN CHAMFER C in	0.156	0.187	0.217			
MAX FILLET RAD r_1 in	0.16	0.16	0.32			
MAX FILLET RAD r_2 in	0.16	0.16	0.32			

TOLERANCES

	$ØD_1$	$Ød_1$	$Ød_2$	$Ød_3$	L_1		L_2	
mm	H11	h10	f9	h11	+0.4	+0.15	+0.1	-0
in	H11	h10	f9	h11	+0.016	+0.005	+0.004	-0

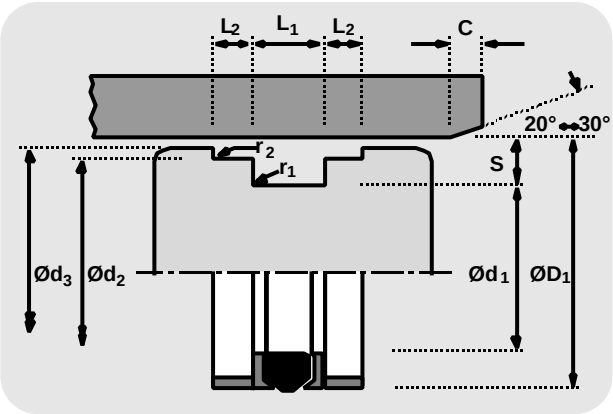

DESIGN

A robust assembly designed specifically for one piece pistons, the Hallite 53 double acting seal uses a rubber sealing element which has proved itself in service to be extremely wear resistant and capable of working most effectively in a wide variety of medium duty applications. The seal is also suitable for two piece pistons.

The assembly comprises a rubber seal, two split support rings and two split bearings, one of each located either side of the seal.

The nitrile rubber seal is designed to have its section compressed by the housing, to ensure a low pressure seal and, when pressurised be protected from extrusion damage by the extending lips of the support ring. The support ring is manufactured from a tough flexible polymer and scarf cut for assembly.

The proportions of the range have been determined to give a satisfactory performance when used with the recommended operating conditions.

Note : Other sizes of this design are shown under Hallite 50, 64 and 68. Also see Hallite 753 for interchangeable sizes.

FEATURES

- WELL PROVEN DESIGN
- LONG LIFE

Piston seals

Hallite 53

metric

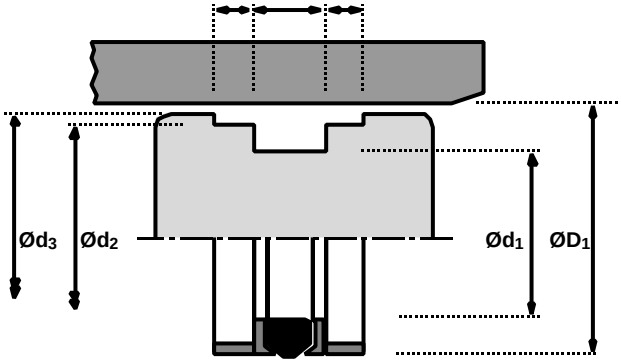

$ØD_1$	TOL H11	$Ød_1$	TOL h10	$Ød_2$	TOL f9	$Ød_3$	TOL h11	L_1 + 0.4 + 0.15	L_2 + 0.1 - 0	PART No.
25	+0.13 +0.00	17	+0.00 -0.07	22.1	-0.020 -0.072	24.0	+0.00 -0.13	8.0	4.00	2249212
32	+0.16 +0.00	22	+0.00 -0.08	28.5	-0.020 -0.072	31.0	+0.00 -0.16	10.0	5.00	2249312
40	+0.16 +0.00	30	+0.00 -0.08	36.5	-0.025 -0.087	39.0	+0.00 -0.16	10.0	5.00	2249412
45	+0.16 +0.00	35	+0.00 -0.10	40.4	-0.025 -0.087	44.0	+0.00 -0.16	16.4	6.35	2199411
50	+0.16 +0.00	34	+0.00 -0.10	45.4	-0.025 -0.087	49.0	+0.00 -0.16	18.0	6.35	0209912
50	+0.16 +0.00	35	+0.00 -0.10	46.0	-0.025 -0.087	49.0	+0.00 -0.16	15.0	7.5	0074012
55	+0.19 +0.00	39	+0.00 -0.10	50.4	-0.030 -0.104	54.0	+0.00 -0.19	18.0	6.35	1352212
60	+0.19 +0.00	44	+0.00 -0.10	55.4	-0.030 -0.104	58.5	+0.00 -0.19	18.0	6.35	1361412
63	+0.19 +0.00	47	+0.00 -0.10	58.4	-0.030 -0.104	61.5	+0.00 -0.19	19.0	6.35	0209712
65	+0.19 +0.00	50	+0.00 -0.10	60.4	-0.030 -0.104	63.5	+0.00 -0.19	18.0	6.35	1350512
70	+0.19 +0.00	50	+0.00 -0.10	64.0	-0.030 -0.104	68.0	+0.00 -0.19	22.0	10.00	0075112
70	+0.19 +0.00	50	+0.00 -0.10	64.2	-0.030 -0.104	68.0	+0.00 -0.19	22.0	6.35	0075122
75	+0.19 +0.00	55	+0.00 -0.12	69.0	-0.030 -0.104	73.0	+0.00 -0.19	22.0	10.00	0075612
75	+0.19 +0.00	55	+0.00 -0.12	69.2	-0.030 -0.104	73.0	+0.00 -0.19	22.0	6.35	0075622
80	+0.19 +0.00	60	+0.00 -0.12	74.0	-0.030 -0.104	78.0	+0.00 -0.19	22.0	10.00	0073812
80	+0.19 +0.00	60	+0.00 -0.12	74.2	-0.030 -0.104	78.0	+0.00 -0.19	22.0	6.35	0073822
85	+0.22 +0.00	65	+0.00 -0.12	79.2	-0.030 -0.104	83.0	+0.00 -0.22	22.0	6.35	0075722
90	+0.22 +0.00	70	+0.00 -0.12	84.0	-0.036 -0.123	88.0	+0.00 -0.22	22.0	10.00	0075812
90	+0.22 +0.00	70	+0.00 -0.12	84.2	-0.036 -0.123	88.0	+0.00 -0.22	22.0	6.35	0075822
95	+0.22 +0.00	75	+0.00 -0.12	89.2	-0.036 -0.123	93.0	+0.00 -0.22	22.0	6.35	1352512
100	+0.22 +0.00	75	+0.00 -0.12	93.2	-0.036 -0.123	98.0	+0.00 -0.22	22.0	6.35	0073712
100	+0.22 +0.00	80	+0.00 -0.12	94.0	-0.036 -0.123	98.0	+0.00 -0.22	22.0	10.00	0083612
105	+0.22 +0.00	80	+0.00 -0.12	98.1	-0.036 -0.123	103.0	+0.00 -0.22	22.0	6.35	1352812
110	+0.22 +0.00	85	+0.00 -0.14	103.1	-0.036 -0.123	108.0	+0.00 -0.22	22.0	6.35	0091113

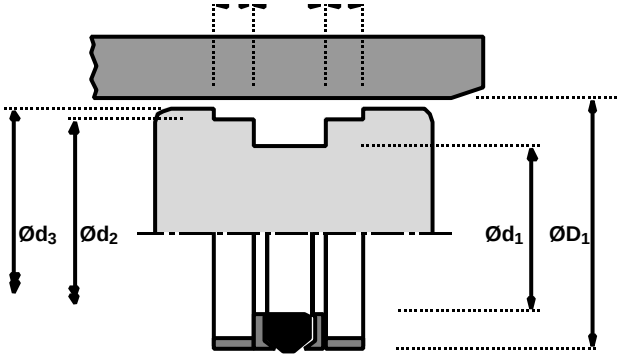

Piston seals

Hallite 53

metric

ØD1	TOL H11	Ød1	TOL h10	Ød2	TOL f9	Ød3	TOL h11	L1 + 0.4 + 0.15	L2 + 0.1 - 0	PART No.
115	+0.22 +0.00	90	+0.00 -0.14	108.1	-0.036 -0.123	113.0	+0.00 -0.22	22.0	6.35	0084222
120	+0.22 +0.00	95	+0.00 -0.14	113.1	-0.036 -0.123	118.0	+0.00 -0.22	22.0	6.35	0090012
125	+0.25 +0.00	100	+0.00 -0.14	118.1	-0.036 -0.123	123.0	+0.00 -0.25	25.0	6.35	0087522
130	+0.25 +0.00	105	+0.00 -0.14	122.6	-0.043 -0.143	128.0	+0.00 -0.25	25.0	9.52	0089622
135	+0.25 +0.00	110	+0.00 -0.14	127.6	-0.043 -0.143	133.0	+0.00 -0.25	25.0	9.52	0091222
135	+0.25 +0.00	110	+0.00 -0.14	128.0	-0.043 -0.143	133.0	+0.00 -0.25	25.0	12.70	0091212
140	+0.25 +0.00	115	+0.00 -0.14	132.6	-0.043 -0.143	138.0	+0.00 -0.25	25.0	6.35	0091032
140	+0.25 +0.00	115	+0.00 -0.14	132.6	-0.043 -0.143	138.0	+0.00 -0.25	25.0	9.52	0091022
145	+0.25 +0.00	120	+0.00 -0.14	137.6	-0.043 -0.143	143.0	+0.00 -0.25	25.0	9.52	0091422
150	+0.25 +0.00	125	+0.00 -0.16	142.6	-0.043 -0.143	148.0	+0.00 -0.25	25.0	9.52	0091522
150	+0.25 +0.00	125	+0.00 -0.16	143.0	-0.043 -0.143	148.0	+0.00 -0.25	25.0	12.70	0091512
155	+0.25 +0.00	130	+0.00 -0.16	147.6	-0.043 -0.143	153.0	+0.00 -0.25	25.0	9.52	0091622
160	+0.25 +0.00	135	+0.00 -0.16	152.6	-0.043 -0.143	158.0	+0.00 -0.25	25.0	9.52	0089922
165	+0.25 +0.00	140	+0.00 -0.16	158.0	-0.043 -0.143	163.0	+0.00 -0.25	25.0	12.70	1257612
170	+0.25 +0.00	145	+0.00 -0.16	161.7	-0.043 -0.143	168.0	+0.00 -0.25	25.0	12.70	0088012
175	+0.25 +0.00	150	+0.00 -0.16	166.7	-0.043 -0.143	173.0	+0.00 -0.25	25.0	12.70	1260712
180	+0.25 +0.00	155	+0.00 -0.16	171.7	-0.043 -0.143	178.0	+0.00 -0.25	25.0	12.70	0091712
190	+0.29 +0.00	165	+0.00 -0.16	181.7	-0.050 -0.165	188.0	+0.00 -0.29	25.0	12.70	1270012
195	+0.29 +0.00	170	+0.00 -0.16	186.7	-0.050 -0.165	193.0	+0.00 -0.29	25.0	12.70	1265412
200	+0.29 +0.00	170	+0.00 -0.16	192.0	-0.050 -0.165	197.0	+0.00 -0.29	30.0	15.00	1270112
200	+0.29 +0.00	175	+0.00 -0.16	191.6	-0.050 -0.165	198.0	+0.00 -0.29	25.0	12.70	0089712
220	+0.29 +0.00	190	+0.00 -0.19	212.0	-0.050 -0.165	217.0	+0.00 -0.29	30.0	15.00	1714810
250	+0.29 +0.00	220	+0.00 -0.19	242.0	-0.050 -0.165	247.0	+0.00 -0.29	30.0	15.00	1264312
280	+0.29 +0.00	250	+0.00 -0.19	272.0	-0.056 -0.186	277.0	+0.00 -0.32	30.0	15.00	1261712

Piston seals

Hallite

53

inch

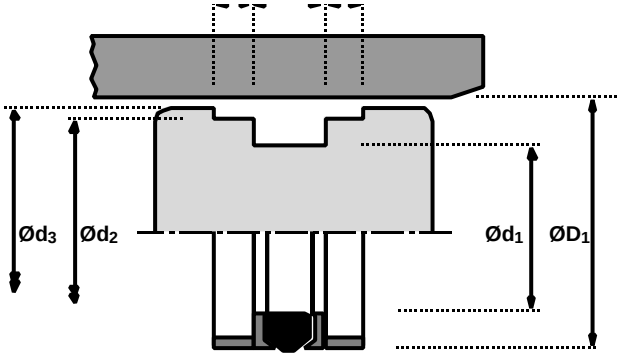

$ØD_1$	TOL H11	$Ød_1$	TOL h10	$Ød_2$	TOL f9	$Ød_3$	TOL h11	L_1 + 0.016 + 0.005	L_2 + 0.004 - 0	PART No.
2.000	+0.007 +0.000	1.375	+0.000 -0.004	1.821	-0.001 -0.003	1.950	+0.000 -0.007	0.750	0.250	6593410
2.250	+0.007 +0.000	1.625	+0.000 -0.004	2.071	-0.001 -0.004	2.200	+0.000 -0.007	0.750	0.250	6593510
2.500	+0.007 +0.000	1.875	+0.000 -0.004	2.321	-0.001 -0.004	2.450	+0.000 -0.007	0.750	0.250	6593610
2.750	+0.007 +0.000	2.000	+0.000 -0.005	2.524	-0.001 -0.004	2.690	+0.000 -0.007	0.937	0.250	6593710
3.000	+0.007 +0.000	2.250	+0.000 -0.005	2.774	-0.001 -0.004	2.940	+0.000 -0.007	0.937	0.250	1377612
3.250	+0.009 +0.000	2.500	+0.000 -0.005	3.023	-0.001 -0.004	3.190	+0.000 -0.009	0.937	0.250	6593910
3.500	+0.009 +0.000	2.750	+0.000 -0.005	3.274	-0.001 -0.005	3.440	+0.000 -0.009	0.937	0.250	0082412
3.750	+0.009 +0.000	3.000	+0.000 -0.006	3.524	-0.001 -0.005	3.690	+0.000 -0.009	0.937	0.250	2361010
4.000	+0.009 +0.000	3.250	+0.000 -0.006	3.773	-0.001 -0.005	3.940	+0.000 -0.009	0.937	0.250	0082313
4.250	+0.009 +0.000	3.500	+0.000 -0.006	4.024	-0.001 -0.005	4.187	+0.000 -0.009	0.937	0.250	0082211
4.500	+0.009 +0.000	3.500	+0.000 -0.006	4.232	-0.001 -0.005	4.428	+0.000 -0.009	1.250	0.250	6594210
4.750	+0.010 +0.000	3.750	+0.000 -0.006	4.463	-0.001 -0.005	4.660	+0.000 -0.010	1.250	0.375	2360910
5.000	+0.010 +0.000	4.000	+0.000 -0.006	4.712	-0.001 -0.005	4.910	+0.000 -0.010	1.250	0.375	6594310
5.500	+0.010 +0.000	4.500	+0.000 -0.006	5.213	-0.002 -0.006	5.410	+0.000 -0.010	1.250	0.375	6594410
6.000	+0.010 +0.000	5.000	+0.000 -0.006	5.713	-0.002 -0.006	5.910	+0.000 -0.010	1.250	0.375	6594510

Piston seals

Hallite

54

TECHNICAL DETAILS

METRIC ○ — INCH ●

OPERATING CONDITIONS

MAXIMUM SPEED	4.0 m/sec	12.0 ft/sec
TEMPERATURE RANGE	-30°C + 100°C	-22°F + 212°F
MAXIMUM PRESSURE	350 bar	5000 p.s.i.

MAXIMUM EXTRUSION GAP

Figures show the maximum permissible gap all on one side using the minimum clearance Ø and maximum bore Ø

PRESSURE bar	100	160	250	350
MAXIMUM GAP mm	0.60	0.50	0.45	0.35
PRESSURE p.s.i.	1500	2400	3750	5250
MAXIMUM GAP in	0.024	0.020	0.018	0.014

SURFACE ROUGHNESS

	µmRa	µmRt	µinCLA	µinRMS
DYNAMIC SEALING FACE $ØD_1$	0.1 ↔ 0.4	4 max	4 ↔ 16	5 ↔ 18
STATIC SEALING FACE $Ød_1$	1.6 max	10 max	63 max	70 max
STATIC HOUSING FACES L_1	3.2 max	16 max	125 max	140 max

CHAMFERS & RADII

GROOVE SECTION ≤ S mm	3.75	5.50	7.75	10.50	12.25
MIN CHAMFER C mm	2.00	2.50	5.00	7.50	10.00
MAX FILLET RAD r_1 mm	0.40	0.80	1.20	1.60	2.00
GROOVE SECTION ≤ S in	0.147	0.216	0.305	0.413	0.483
MIN CHAMFER C in	0.093	0.125	0.156	0.187	0.305
MAX FILLET RAD r_1 in	0.016	0.016	0.032	0.032	0.032

TOLERANCES

	$ØD_1$	$Ød_1$	L_1
mm	H9	f8	+0.2 -0
in	H9	f8	+0.008 -0

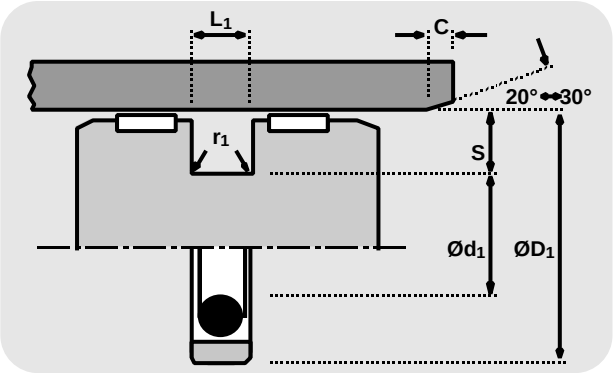

FEATURES

- LOW STICK/SLIP
- LOW BREAKOUT & RUNNING FRICTION
- HIGH MAXIMUM SPEED
- COMPACT PISTON DESIGN
- THE SEAL RING COMPONENT CAN BE MACHINED TO ANY SIZE

MATERIALS

Face material - O-Ring	last two digits of part number
Standard material	
15% Glass/PTFE - NBR	_ _ _ _ _ **10**
Material options:	
15% Glass/PTFE - FKM	_ _ _ _ _ **11**
Bronze/PTFE - NBR	_ _ _ _ _ **20**
Bronze/PTFE - FKM	_ _ _ _ _ **21**

DESIGN

The Hallite 54 double acting piston seal provides the designer with a compact, low friction seal for light to medium duty hydraulic cylinders.

It comprises a PTFE ring, strengthened with additives to resist creep, which is pre-loaded by an O ring to be effective for the operating pressure range recommended. As the pressure rises the O ring deforms and compresses the PTFE ring against the tube wall increasing the sealing force and the effectiveness of the seal. As only the PTFE ring is in contact with the sliding surface, friction is very low and stick-slip movement is eliminated.

The housing width allows the designer to use a narrow width piston, but it is recommended an adequate bearing is mounted either side of the seal as shown.*

A number of material options can be provided to extend operating conditions. Please ensure that the correct part number is specified for the material option as indicated. Technical details shown are for 15% Glass/PTFE and NBR energiser. Technical details for material options should be requested from Hallite Seals. The Hallite 54 seal is not recommended for applications where it is necessary for the pressurised cylinder to maintain the load in a set position.

*See Hallite 87 and 506 wear ring data sheets.

NB: Part numbers suffixed by "‡" indicate housing sizes to meet ISO 7425-1.

Piston seals

Hallite

54

metric

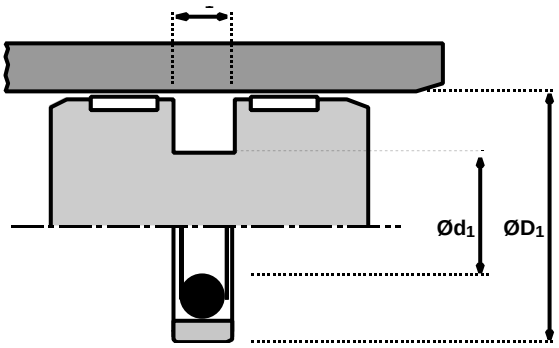

ØD1	TOL H9	Ød1	TOL f8	L1 + 0.2 - 0	PART No.
12	+0.04 +0.00	7.1	-0.01 -0.04	2.20	66239_ _
15	+0.04 +0.00	7.5	-0.01 -0.04	3.20	86163_ _
16	+0.04 +0.00	8.5	-0.01 -0.04	3.20	66240_ _ ‡
20	+0.05 +0.00	12.5	-0.02 -0.04	3.20	66241_ _ ‡
24	+0.05 +0.00	16.5	-0.02 -0.04	3.20	66154_ _
25	+0.05 +0.00	17.5	-0.02 -0.04	3.20	66242_ _ ‡
30	+0.05 +0.00	22.5	-0.02 -0.05	3.20	65968_ _
32	+0.06 +0.00	24.5	-0.02 -0.05	3.20	65969_ _ ‡
35	+0.06 +0.00	27.5	-0.02 -0.05	3.20	65970_ _
38	+0.06 +0.00	30.5	-0.03 -0.06	3.20	66475_ _
40	+0.06 +0.00	29.0	-0.02 -0.05	4.20	65971_ _ ‡
42	+0.06 +0.00	31.0	-0.03 -0.06	4.20	65972_ _
45	+0.06 +0.00	34.0	-0.03 -0.06	4.20	65973_ _
50	+0.06 +0.00	39.0	-0.03 -0.06	4.20	65974_ _ ‡
55	+0.07 +0.00	44.0	-0.03 -0.06	4.20	65975_ _
60	+0.07 +0.00	49.0	-0.03 -0.06	4.20	65976_ _
63	+0.07 +0.00	52.0	-0.03 -0.08	4.20	66243_ _ ‡
65	+0.07 +0.00	54.0	-0.03 -0.08	4.20	86118_ _
70	+0.07 +0.00	59.0	-0.03 -0.08	4.20	65977_ _
75	+0.07 +0.00	64.0	-0.03 -0.08	4.20	66244_ _
80	+0.07 +0.00	64.5	-0.03 -0.08	6.30	65978_ _ ‡
90	+0.09 +0.00	74.5	-0.03 -0.08	6.30	65979_ _
95	+0.09 +0.00	79.5	-0.03 -0.08	6.30	86084_ _

ØD1	TOL H9	Ød1	TOL f8	L1 + 0.2 - 0	PART No.
100	+0.09 +0.00	84.5	-0.04 -0.09	6.30	65980_ _ ‡
110	+0.09 +0.00	94.5	-0.04 -0.09	6.30	65981_ _
115	+0.09 +0.00	99.5	-0.04 -0.09	6.30	65982_ _
120	+0.09 +0.00	104.5	-0.04 -0.09	6.30	66361_ _
125	+0.10 +0.00	109.5	-0.04 -0.09	6.30	65983_ _ ‡
130	+0.10 +0.00	114.5	-0.04 -0.09	6.30	66476_ _
135	+0.10 +0.00	114.0	-0.04 -0.09	8.10	66477_ _
140	+0.10 +0.00	119.0	-0.04 -0.09	8.10	65984_ _
145	+0.10 +0.00	124.0	-0.04 -0.11	8.10	86080_ _
150	+0.10 +0.00	129.0	-0.04 -0.11	8.10	65985_ _
155	+0.10 +0.00	134.0	-0.04 -0.11	8.10	86177_ _
160	+0.10 +0.00	139.0	-0.04 -0.11	8.10	65986_ _ ‡
165	+0.10 +0.00	144.0	-0.04 -0.11	8.10	66491_ _
170	+0.10 +0.00	149.0	-0.04 -0.11	8.10	65987_ _
180	+0.10 +0.00	159.0	-0.04 -0.11	8.10	65988_ _
185	+0.12 +0.00	164.0	-0.04 -0.11	8.10	66478_ _
190	+0.12 +0.00	169.0	-0.04 -0.11	8.10	65989_ _
200	+0.12 +0.00	179.0	-0.04 -0.11	8.10	65990_ _ ‡
210	+0.12 +0.00	189.0	-0.05 -0.12	8.10	86146_ _
220	+0.12 +0.00	199.0	-0.05 -0.12	8.10	66245_ _
225	+0.12 +0.00	204.0	-0.05 -0.12	8.10	66246_ _
230	+0.12 +0.00	209.0	-0.05 -0.12	8.10	66247_ _
240	+0.12 +0.00	219.0	-0.05 -0.12	8.10	86154_ _

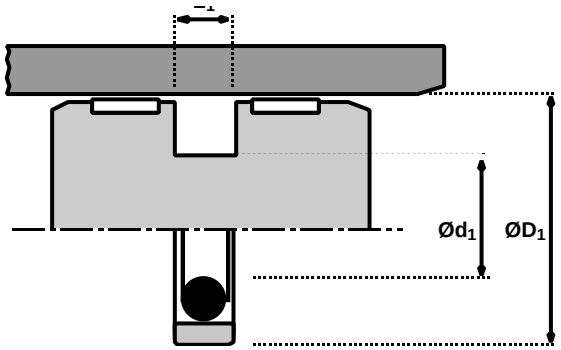

Piston seals

Hallite 54

metric

ØD1	TOL H9	Ød1	TOL f8	L1 + 0.2 - 0	PART No.
250	+0.12 +0.00	229.0	-0.05 -0.12	8.10	66401_ _ ‡
260	+0.12 +0.00	239.0	-0.05 -0.12	8.10	66479_ _
280	+0.13 +0.00	259.0	-0.06 -0.14	8.10	66402_ _
300	+0.13 +0.00	279.0	-0.06 -0.14	8.10	66403_ _
310	+0.13 +0.00	289.0	-0.06 -0.14	8.10	66480_ _
320	+0.13 +0.00	299.0	-0.06 -0.14	8.10	86086_ _ ‡
330	+0.13 +0.00	305.5	-0.06 -0.14	8.10	86081_ _
340	+0.13 +0.00	315.5	-0.06 -0.14	8.10	66481_ _

ØD1	TOL H9	Ød1	TOL f8	L1 + 0.2 - 0	PART No.
350	+0.13 +0.00	325.5	-0.06 -0.14	8.10	86155_ _
360	+0.13 +0.00	335.5	-0.06 -0.14	8.10	86218_ _
370	+0.13 +0.00	345.5	-0.06 -0.14	8.10	86219_ _
380	+0.13 +0.00	355.5	-0.06 -0.14	8.10	86220_ _
390	+0.13 +0.00	365.5	-0.06 -0.14	8.10	86221_ _
400	+0.13 +0.00	375.5	-0.06 -0.14	8.10	66482_ _ ‡

Piston seals

Hallite

54

inch

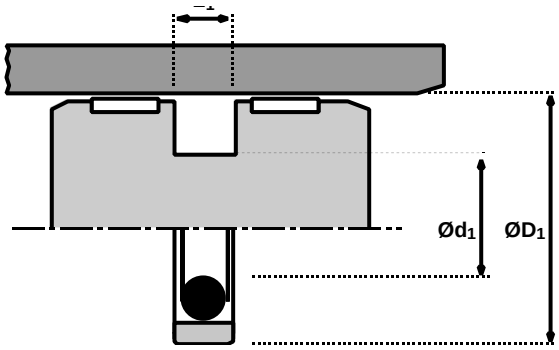

ØD1	TOL H9	Ød1	TOL f8	L1 + 0.008 - 0	PART No.
1.000	+0.002 +0.000	0.704	-0.0008 -0.0020	0.125	66248_ _
1.500	+0.002 +0.000	1.204	-0.0010 -0.0026	0.125	66249_ _
2.000	+0.003 +0.000	1.568	-0.0012 -0.0030	0.165	66250_ _
2.500	+0.003 +0.000	2.068	-0.0012 -0.0030	0.165	66251_ _
3.000	+0.003 +0.000	2.568	-0.0012 -0.0030	0.165	66252_ _
3.250	+0.003 +0.000	2.640	-0.0014 -0.0036	0.250	66253_ _
3.500	+0.003 +0.000	2.890	-0.0014 -0.0036	0.250	66254_ _

ØD1	TOL H9	Ød1	TOL f8	L1 + 0.008 - 0	PART No.
4.000	+0.003 +0.000	3.390	-0.0014 -0.0036	0.250	66255_ _
4.500	+0.003 +0.000	3.890	-0.0014 -0.0036	0.250	66256_ _
5.000	+0.004 +0.000	4.390	-0.0016 -0.0041	0.250	66257_ _
6.000	+0.004 +0.000	5.174	-0.0016 -0.0041	0.320	66258_ _
7.000	+0.004 +0.000	6.174	-0.0016 -0.0041	0.320	66259_ _
8.000	+0.004 +0.000	7.174	-0.0020 -0.0048	0.320	66260_ _

Piston seals

Hallite

56

TECHNICAL DETAILS

METRIC ○ — INCH ●

OPERATING CONDITIONS

	METRIC	INCH
MAXIMUM SPEED	0.5 m/sec	1.5 ft/sec
TEMPERATURE RANGE	-30°C + 100°C	-22°F + 212°F
MAXIMUM PRESSURE	500 bar	7500 p.s.i.

MAXIMUM EXTRUSION GAP

Figures show the maximum permissible gap all on one side using the minimum clearance Ø and maximum bore Ø

PRESSURE bar	160	250	400	500
MAXIMUM GAP mm	0.35	0.3	0.2	0.1
PRESSURE p.s.i.	2400	3750	6000	7500
MAXIMUM GAP in	0.016	0.012	0.008	0.004

SURFACE ROUGHNESS

	µmRa	µmRt	µinCLA	µinRMS
DYNAMIC SEALING FACE $ØD_1$	0.1 ↔ 0.4	4 max	4 ↔ 16	5 ↔ 18
STATIC SEALING FACE $Ød_1$	1.6 max	10 max	63 max	70 max
STATIC HOUSING FACES L_1	3.2 max	16 max	125 max	140 max

CHAMFERS & RADII

GROOVE SECTION ≤ S mm	5.0	7.5	8.0	10.0	12.5
MIN CHAMFER C mm	2.4	4.0	5.0	5.0	6.5
MAX FILLET RAD r_1 mm	0.4	0.8	0.8	1.2	1.6
GROOVE SECTION ≤ S in	0.250	0.312	0.375	0.500	0.625
MIN CHAMFER C in	0.125	0.156	0.187	0.217	0.250
MAX FILLET RAD r_1 in	0.016	0.016	0.032	0.032	0.046

TOLERANCES

	$ØD_1$	$Ød_1$	L_1	
mm	H11	js11	+0.25	+0
in	H11	js11	+0.030	+0.020

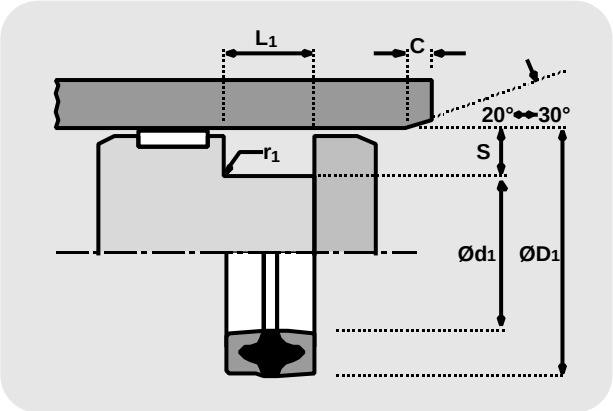

FEATURES

- WELL PROVEN DESIGN
- TOLERANT TO CONTAMINATION
- WIDE RANGE OF NON STANDARD SIZES

DESIGN

A medium to heavy duty double acting seal, the Hallite 56 has shown itself over many years to be an effective and robust piston seal in a wide variety of applications. Designed for split pistons it offers the benefits in terms of sealing efficiency and low friction gained from rubber/fabric and a specific proportion of rubber in contact with the cylinder surface.

The centre of the seal is rubber which is bonded to two ‚U„ section bases of rubberised fabric, and is compressed by the housing to obtain an effective low pressure seal. When the pressure increases the rubber energises the ‚U„ section and deforms it to the housing, increasing the sealing area and improving the seal.

Rubberised fabric is used to protect the rubber because it has strength and durability which combines with its ability to retain lubricant, to help keep friction low and reduce wear.

The proportions of the range have been determined to give a satisfactory performance when used with the recommended operating conditions. Many other sizes are available outside this range.

Piston seals

Hallite

56

metric

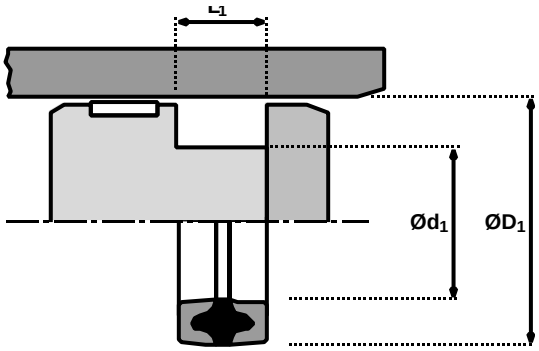

ØD1	TOL H11	Ød1	TOL js11	L1 + 0.25 - 0	PART No.
30	+0.13 +0.00	20	+0.07 -0.07	12.5	0200540
40	+0.16 +0.00	25	+0.07 -0.07	19.0	0472840
50	+0.16 +0.00	35	+0.08 -0.08	19.0	0474640
55	+0.19 +0.00	40	+0.08 -0.08	19.0	0475040
60	+0.19 +0.00	40	+0.08 -0.08	25.0	0282040
60	+0.19 +0.00	45	+0.08 -0.08	19.0	0979440
63	+0.19 +0.00	43	+0.08 -0.08	25.0	0646740
65	+0.19 +0.00	50	+0.08 -0.08	19.0	0383840
70	+0.19 +0.00	50	+0.08 -0.08	25.0	0294640
75	+0.19 +0.00	55	+0.10 -0.10	25.0	0818640
80	+0.19 +0.00	60	+0.10 -0.10	25.0	0294940
85	+0.22 +0.00	65	+0.10 -0.10	25.0	0388640
90	+0.22 +0.00	70	+0.10 -0.10	25.0	0296040
100	+0.22 +0.00	80	+0.10 -0.10	25.0	0295140
110	+0.22 +0.00	90	+0.11 -0.11	25.0	0712440
120	+0.22 +0.00	100	+0.11 -0.11	25.0	0296140
125	+0.25 +0.00	100	+0.11 -0.11	19.0	1007440
125	+0.25 +0.00	100	+0.11 -0.11	32.0	0418640
140	+0.25 +0.00	120	+0.11 -0.11	25.0	0250540
150	+0.25 +0.00	120	+0.11 -0.11	38.0	1289540
160	+0.25 +0.00	135	+0.13 -0.13	32.0	0080440

ØD1	TOL H11	Ød1	TOL js11	L1 + 0.25 - 0	PART No.
170	+0.25 +0.00	150	+0.13 -0.13	25.0	0303340
180	+0.25 +0.00	160	+0.13 -0.13	25.0	1283140
190	+0.29 +0.00	160	+0.13 -0.13	38.0	0838440
200	+0.29 +0.00	170	+0.13 -0.13	38.0	0087140
220	+0.29 +0.00	190	+0.15 -0.15	38.0	0087340
230	+0.29 +0.00	200	+0.15 -0.15	38.0	2010040
240	+0.29 +0.00	210	+0.15 -0.15	38.0	0094340
250	+0.29 +0.00	220	+0.15 -0.15	38.0	1056340
260	+0.32 +0.00	230	+0.15 -0.15	38.0	0094540
300	+0.32 +0.00	270	+0.16 -0.16	38.0	0094840
310	+0.32 +0.00	280	+0.16 -0.16	38.0	0094940
330	+0.36 +0.00	300	+0.16 -0.16	38.0	0095040
360	+0.36 +0.00	320	+0.18 -0.18	45.0	1054040
400	+0.36 +0.00	360	+0.18 -0.18	45.0	1054340
420	+0.40 +0.00	380	+0.20 -0.20	45.0	0095140
460	+0.40 +0.00	420	+0.20 -0.20	45.0	0095340
480	+0.40 +0.00	440	+0.20 -0.20	45.0	0095440
500	+0.40 +0.00	460	+0.20 -0.20	45.0	0134740
540	+0.44 +0.00	500	+0.20 -0.20	45.0	2018240
580	+0.44 +0.00	540	+0.22 -0.22	50.0	2020940

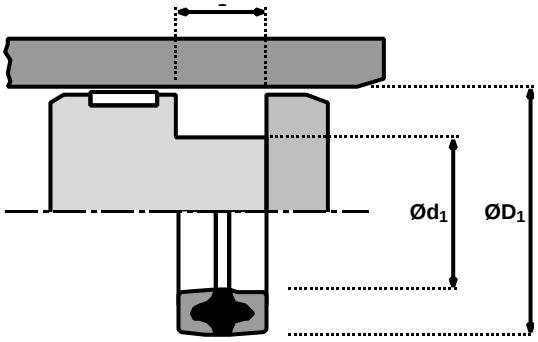

Piston seals

Hallite 56

inch

ØD1	TOL H11	Ød1	TOL js11	L1 + 0.030 + 0.020	PART No.
1.000	+0.005 +0.000	0.625	+0.002 -0.002	0.469	1247640
1.250	+0.006 +0.000	0.750	+0.003 -0.003	0.625	0403740
1.500	+0.006 +0.000	1.000	+0.003 -0.003	0.625	0422440
1.750	+0.006 +0.000	1.125	+0.003 -0.003	0.750	0778240
2.000	+0.007 +0.000	1.375	+0.003 -0.003	0.750	0778440
2.250	+0.007 +0.000	1.625	+0.003 -0.003	0.750	1432640
2.375	+0.007 +0.000	1.750	+0.003 -0.003	0.750	0939840
2.500	+0.007 +0.000	1.875	+0.003 -0.003	0.750	0867240
2.750	+0.007 +0.000	2.000	+0.004 -0.004	0.937	1369140
2.875	+0.007 +0.000	2.125	+0.004 -0.004	0.937	0779640
3.000	+0.007 +0.000	2.250	+0.004 -0.004	0.937	1098440
3.250	+0.009 +0.000	2.500	+0.004 -0.004	0.937	0782440
3.375	+0.009 +0.000	2.625	+0.004 -0.004	0.937	0773840
3.500	+0.009 +0.000	2.750	+0.004 -0.004	0.937	0437840
3.750	+0.009 +0.000	3.000	+0.004 -0.004	0.937	0410540
4.000	+0.009 +0.000	3.250	+0.004 -0.004	0.716	6504740
4.000	+0.009 +0.000	3.250	+0.004 -0.004	0.937	1407740
4.250	+0.009 +0.000	3.500	+0.004 -0.004	0.937	1128840
4.500	+0.009 +0.000	3.500	+0.004 -0.004	1.250	0448840
4.625	+0.009 +0.000	3.625	+0.004 -0.004	1.250	0449040
4.750	+0.010 +0.000	3.750	+0.004 -0.004	1.250	1007040
5.000	+0.010 +0.000	4.000	+0.004 -0.004	1.250	0443040
5.250	+0.010 +0.000	4.250	+0.004 -0.004	1.250	0892240

ØD1	TOL H11	Ød1	TOL js11	L1 + 0.030 + 0.020	PART No.
5.500	+0.010 +0.000	4.500	+0.004 -0.004	1.250	0133240
6.000	+0.010 +0.000	5.000	+0.005 -0.005	1.250	1367040
6.500	+0.010 +0.000	5.500	+0.005 -0.005	1.250	1164140
7.000	+0.010 +0.000	6.000	+0.005 -0.005	1.250	1188840
7.250	+0.011 +0.000	6.500	+0.005 -0.005	1.625	0424140
7.500	+0.011 +0.000	6.250	+0.005 -0.005	1.625	1255240
7.750	+0.011 +0.000	6.500	+0.005 -0.005	1.625	1192740
8.000	+0.011 +0.000	6.750	+0.005 -0.005	1.625	0426540
8.000	+0.011 +0.000	7.000	+0.005 -0.005	1.000	0224340
8.250	+0.011 +0.000	7.000	+0.005 -0.005	1.625	1219240
8.500	+0.011 +0.000	7.250	+0.005 -0.005	1.625	1286440
8.750	+0.011 +0.000	7.500	+0.005 -0.005	1.625	0418140
9.000	+0.011 +0.000	7.750	+0.006 -0.006	1.625	1266640
9.250	+0.011 +0.000	8.000	+0.006 -0.006	1.625	0455740
9.500	+0.011 +0.000	8.250	+0.006 -0.006	1.625	1332240
9.750	+0.011 +0.000	8.500	+0.006 -0.006	1.625	1332340
10.000	+0.013 +0.000	8.750	+0.006 -0.006	1.625	0436140
10.250	+0.013 +0.000	9.000	+0.006 -0.006	1.625	0437540
10.500	+0.013 +0.000	9.250	+0.006 -0.006	1.625	1331940
10.750	+0.013 +0.000	9.500	+0.006 -0.006	1.625	1320440
11.000	+0.013 +0.000	9.750	+0.006 -0.006	1.625	0433940
11.250	+0.013 +0.000	10.250	+0.006 -0.006	1.625	1331640
12.000	+0.013 +0.000	10.750	+0.006 -0.006	1.625	1331440

Piston seals

Hallite

56

inch

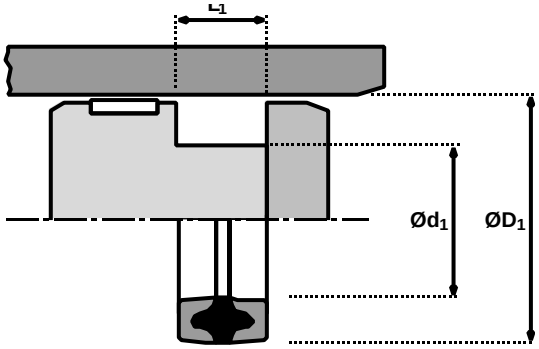

ØD1	TOL H11	Ød1	TOL js11	L1 + 0.030 + 0.020	PART No.
12.500	+0.013 +0.000	11.250	+0.006 -0.006	1.625	0436340
13.000	+0.013 +0.000	11.750	+0.006 -0.006	1.625	0436540
14.500	+0.013 +0.000	13.000	+0.006 -0.006	1.500	0270940
15.000	+0.013 +0.000	13.750	+0.007 -0.007	1.500	0787040
16.000	+0.016 +0.000	14.750	+0.007 -0.007	1.800	2117440

ØD1	TOL H11	Ød1	TOL js11	L1 + 0.030 + 0.020	PART No.
17.000	+0.016 +0.000	15.000	+0.007 -0.007	2.250	1345340
18.000	+0.016 +0.000	16.000	+0.008 -0.008	2.062	2002040
19.500	+0.016 +0.000	18.000	+0.008 -0.008	2.500	2108240
20.000	+0.017 +0.000	18.500	+0.009 -0.009	1.750	2111240

Piston seals

Hallite

58

TECHNICAL DETAILS

METRIC ○ — INCH ●

OPERATING CONDITIONS

MAXIMUM SPEED	0.5 m/sec	1.5 ft/sec
TEMPERATURE RANGE	-30°C + 100°C	-22°F + 212°F
MAXIMUM PRESSURE	700 bar	10,000 p.s.i.

SURFACE ROUGHNESS

	µmRa	µmRt	µinCLA	µinRMS
DYNAMIC SEALING FACE $ØD_1$	0.1 ↔ 0.4	4 max	4 ↔ 16	5 ↔ 18
STATIC SEALING FACE $Ød_1$ $Ød_2$	1.6 max	10 max	63 max	70 max
STATIC HOUSING FACES $Ød_3$ L_1 L_2	3.2 max	16 max	125 max	140 max

CHAMFERS & RADII

GROOVE SECTION ≤ S mm	5.0	7.5	10.0	12.5	15.0	
MIN CHAMFER C mm	2.5	4.0	5.0	6.5	7.5	
MIN CHAMFER C_1 mm	1.0	1.0	1.0	1.5	1.5	
MAX FILLET RAD r_1 mm	0.2	0.2	0.2	0.4	0.4	
MAX FILLET RAD r_2 mm	0.2	0.2	0.2	0.4	0.4	
GROOVE SECTION ≤ S in	0.187	0.250	0.312	0.375	0.500	0.625
MIN CHAMFER C in	0.093	0.125	0.156	0.187	0.217	0.250
MIN CHAMFER C_1 in	0.032	0.032	0.032	0.062	0.062	0.062
MAX FILLET RAD r_1 in	0.008	0.008	0.008	0.008	0.016	0.016
MAX FILLET RAD r_2 in	0.008	0.008	0.008	0.008	0.016	0.016

TOLERANCES

	$ØD_1$	$Ød_1$	$Ød_2$	$Ød_3$	L_1		L_2	
mm	H11	js11	h9	js11	+0.25	-0	0	-0.15
in	H11	js11	h9	js11	+0.035	+0.025	0	-0.005

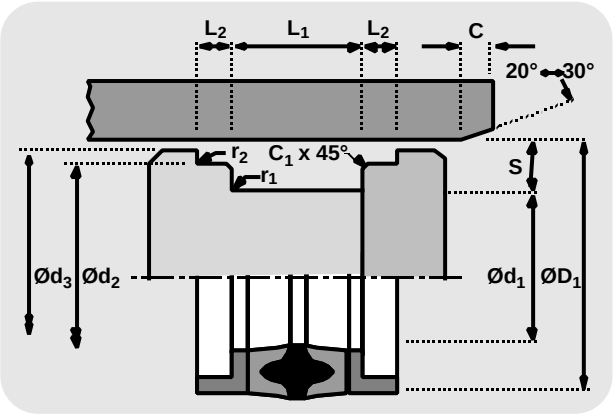

FEATURES

- WELL PROVEN DESIGN
- TOLERANT TO CONTAMINATION
- HIGH PRESSURE CAPABILITY

DESIGN

The Hallite 58 double acting piston seal combines the Hallite 56 seal with bearing rings to give a very robust heavy duty seal assembly for split pistons. It enables the designer to use larger clearances and, with the integral bearing rings, to restrict the piston length.

The assembly comprises a seal and two L shaped bearings. The centre of the seal is rubber which is bonded to two ‚U„ section bases of rubberised fabric, and is compressed by the housing to obtain an effective low pressure seal. When the pressure increases the rubber energises the ‚U„ section and deforms it to the housing, increasing the sealing area and improving the seal.

Rubberised fabric is used to protect the rubber, because it has strength and durability which combines with its ability to retain lubricant to help keep friction low and reduce wear.

Supporting the seal at either end is a polyacetal bearing proportioned to react to the pressure on the seal to prevent extrusion damage, and support the piston and its side load.

Piston seals

Hallite

58

metric

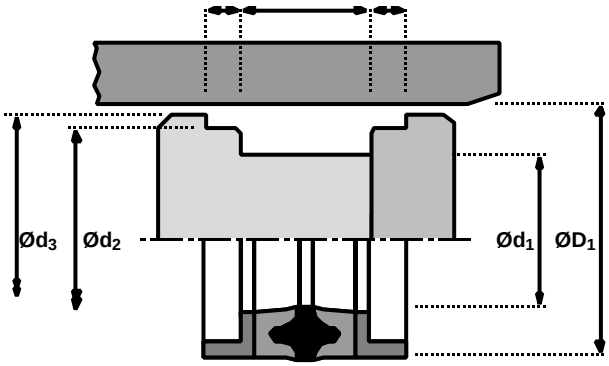

$ØD_1$	TOL H11	$Ød_1$	TOL js11	$Ød_2$	TOL h9	$Ød_3$	TOL js11	L_1 + 0.25 - 0	L_2 0 - 0.15	PART No.
40	+0.16 +0.00	25	+0.07 -0.07	34.85	+0.000 -0.062	39.0	+0.08 -0.08	24.0	6.00	0472850
50	+0.16 +0.00	35	+0.08 -0.08	44.85	+0.000 -0.062	48.5	+0.08 -0.08	24.0	6.00	0474650
55	+0.19 +0.00	40	+0.08 -0.08	49.85	+0.000 -0.062	53.5	+0.10 -0.10	24.0	6.00	0475050
60	+0.19 +0.00	40	+0.08 -0.08	53.85	+0.000 -0.074	58.5	+0.10 -0.10	31.0	7.00	0282050
63	+0.19 +0.00	43	+0.08 -0.08	56.85	+0.000 -0.074	61.5	+0.10 -0.10	31.0	7.00	0646750
63	+0.19 +0.00	48	+0.08 -0.08	57.85	+0.000 -0.074	61.5	+0.10 -0.10	24.0	6.00	0205250
65	+0.19 +0.00	50	+0.08 -0.08	59.85	+0.000 -0.074	63.5	+0.10 -0.10	24.0	6.00	0383850
70	+0.19 +0.00	50	+0.08 -0.08	63.85	+0.000 -0.074	68.0	+0.10 -0.10	31.0	7.00	0294650
75	+0.19 +0.00	55	+0.10 -0.10	68.85	+0.000 -0.074	73.0	+0.10 -0.10	31.0	7.00	0818650
80	+0.19 +0.00	60	+0.10 -0.10	73.85	+0.000 -0.074	78.0	+0.10 -0.10	31.0	7.00	0294950
85	+0.19 +0.00	65	+0.10 -0.10	78.85	+0.000 -0.074	83.0	+0.11 -0.11	31.0	7.00	0388650
90	+0.22 +0.00	70	+0.10 -0.10	83.85	+0.000 -0.087	88.0	+0.11 -0.11	31.0	7.00	0296050
95	+0.22 +0.00	75	+0.10 -0.10	88.85	+0.000 -0.087	93.0	+0.11 -0.11	31.0	7.00	0412750
100	+0.22 +0.00	75	+0.10 -0.10	93.24	+0.000 -0.087	98.0	+0.11 -0.11	22.0	6.45	0034950
100	+0.22 +0.00	75	+0.10 -0.10	93.85	+0.000 -0.087	98.0	+0.11 -0.11	26.0	9.50	0891650
100	+0.22 +0.00	80	+0.10 -0.10	93.85	+0.000 -0.087	98.0	+0.11 -0.11	31.0	7.00	0295150
105	+0.22 +0.00	80	+0.11 -0.11	98.85	+0.000 -0.087	103.0	+0.11 -0.11	38.0	9.50	0413150
110	+0.22 +0.00	85	+0.11 -0.11	103.50	+0.000 -0.087	108.0	+0.11 -0.11	22.0	6.45	1188250
110	+0.22 +0.00	85	+0.11 -0.11	103.50	+0.000 -0.087	108.0	+0.11 -0.11	25.0	6.45	0820650
110	+0.22 +0.00	90	+0.11 -0.11	103.85	+0.000 -0.087	108.0	+0.11 -0.11	31.0	7.00	0712450
115	+0.22 +0.00	95	+0.11 -0.11	108.85	+0.000 -0.087	113.0	+0.11 -0.11	31.0	7.00	0796450
120	+0.22 +0.00	100	+0.11 -0.11	113.85	+0.000 -0.087	118.0	+0.11 -0.11	31.0	7.00	0296150
125	+0.25 +0.00	100	+0.11 -0.11	118.50	+0.000 -0.087	123.0	+0.13 -0.13	25.0	6.45	1007450

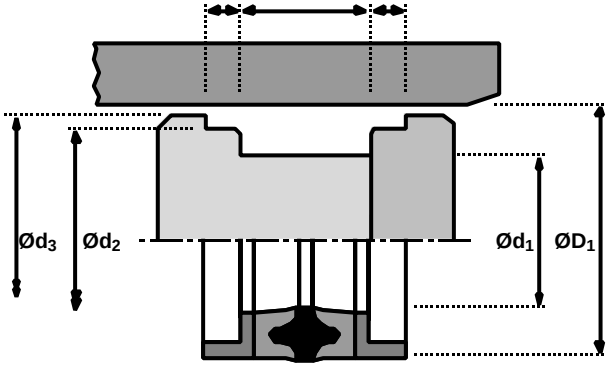

Piston seals

Hallite 58

metric

ØD1	TOL H11	Ød1	TOL js11	Ød2	TOL h9	Ød3	TOL js11	L1 + 0.25 - 0	L2 0 - 0.15	PART No.
125	+0.25 +0.00	100	+0.11 -0.11	118.85	+0.000 -0.087	123.0	+0.13 -0.13	38.0	9.50	0418650
130	+0.25 +0.00	104	+0.11 -0.11	123.85	+0.000 -0.100	128.0	+0.13 -0.13	38.0	9.50	0244350
130	+0.25 +0.00	105	+0.11 -0.11	123.50	+0.000 -0.100	128.0	+0.13 -0.13	25.0	6.45	0044850
135	+0.25 +0.00	110	+0.11 -0.11	128.35	+0.000 -0.100	133.0	+0.13 -0.13	38.0	9.50	0304350
140	+0.25 +0.00	115	+0.11 -0.11	133.50	+0.000 -0.100	138.0	+0.13 -0.13	25.0	6.45	1008450
140	+0.25 +0.00	120	+0.11 -0.11	133.85	+0.000 -0.100	138.0	+0.13 -0.13	31.0	7.00	0250550
145	+0.25 +0.00	125	+0.11 -0.11	138.85	+0.000 -0.100	143.0	+0.13 -0.13	31.0	7.00	0640150
150	+0.25 +0.00	120	+0.11 -0.11	143.85	+0.000 -0.100	148.0	+0.13 -0.13	44.0	9.50	1289550
160	+0.25 +0.00	130	+0.13 -0.13	153.50	+0.000 -0.100	158.0	+0.13 -0.13	25.0	6.45	1008250
160	+0.25 +0.00	135	+0.13 -0.13	153.85	+0.000 -0.100	158.0	+0.13 -0.13	38.0	9.50	0080450
160	+0.25 +0.00	140	+0.13 -0.13	153.85	+0.000 -0.100	158.0	+0.13 -0.13	31.0	7.00	0304650
170	+0.25 +0.00	140	+0.13 -0.13	162.54	+0.000 -0.100	168.0	+0.13 -0.13	25.0	6.45	1222250
170	+0.25 +0.00	150	+0.13 -0.13	163.85	+0.000 -0.100	168.0	+0.13 -0.13	31.0	7.00	0303350
180	+0.25 +0.00	150	+0.13 -0.13	173.00	+0.000 -0.100	178.0	+0.13 -0.13	35.0	6.45	0679850
180	+0.25 +0.00	160	+0.13 -0.13	173.85	+0.000 -0.100	178.0	+0.13 -0.13	31.0	7.00	1283150
190	+0.29 +0.00	160	+0.13 -0.13	183.85	+0.000 -0.115	188.0	+0.15 -0.15	44.0	9.50	0838450
200	+0.29 +0.00	170	+0.13 -0.13	193.85	+0.000 -0.115	198.0	+0.15 -0.15	44.0	12.00	0087150
200	+0.29 +0.00	175	+0.13 -0.13	193.85	+0.000 -0.115	198.0	+0.15 -0.15	38.0	9.5	0838850
210	+0.29 +0.00	180	+0.13 -0.13	203.13	+0.000 -0.115	208.0	+0.15 -0.15	31.7	6.45	1198450
220	+0.29 +0.00	200	+0.15 -0.15	213.85	+0.000 -0.115	218.0	+0.15 -0.15	31.0	7.0	1056450
250	+0.29 +0.00	220	+0.15 -0.15	243.85	+0.000 -0.115	248.0	+0.15 -0.15	44.0	12.0	1056350
280	+0.32 +0.00	250	+0.15 -0.15	273.85	+0.000 -0.130	278.0	+0.16 -0.16	44.0	12.0	1055550

Piston seals

Hallite

58

inch

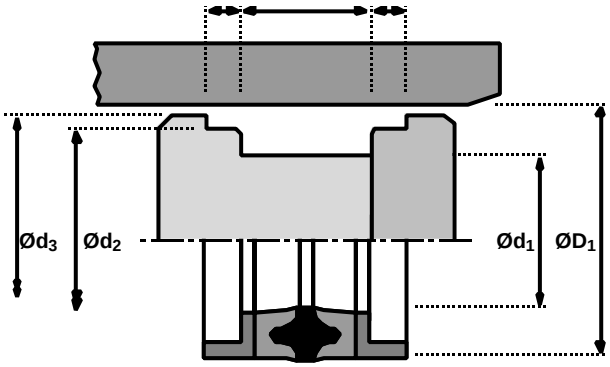

$ØD_1$	TOL H11	$Ød_1$	TOL js11	$Ød_2$	TOL h9	$Ød_3$	TOL js11	L_1 + 0.035 + 0.025	L_2 0 - 0.005	PART No.
1.000	+0.005 +0.000	0.500	+0.002 -0.002	0.864	+0.000 -0.002	0.960	+0.003 -0.003	0.625	0.188	0723850
1.000	+0.005 +0.000	0.625	+0.002 -0.002	0.868	+0.000 -0.002	0.968	+0.003 -0.003	0.594	0.187	1247650
1.125	+0.006 +0.000	0.625	+0.002 -0.002	0.990	+0.000 -0.002	1.093	+0.003 -0.003	0.750	0.250	0855050
1.250	+0.006 +0.000	0.750	+0.003 -0.003	1.118	+0.000 -0.002	1.218	+0.003 -0.003	0.750	0.250	0403750
1.375	+0.006 +0.000	0.875	+0.003 -0.003	1.234	+0.000 -0.002	1.343	+0.003 -0.003	0.625	0.254	6503550
1.375	+0.006 +0.000	0.875	+0.003 -0.003	1.241	+0.000 -0.002	1.343	+0.003 -0.003	0.750	0.250	0401350
1.500	+0.006 +0.000	1.000	+0.003 -0.003	1.362	+0.000 -0.002	1.460	+0.003 -0.003	0.625	0.188	6504850
1.500	+0.006 +0.000	1.000	+0.003 -0.003	1.362	+0.000 -0.002	1.460	+0.003 -0.003	0.625	0.254	1441150
1.500	+0.006 +0.000	1.000	+0.003 -0.003	1.371	+0.000 -0.002	1.468	+0.003 -0.003	0.750	0.250	0422450
1.625	+0.006 +0.000	1.000	+0.003 -0.003	1.428	+0.000 -0.002	1.562	+0.003 -0.003	0.937	0.250	0540650
1.750	+0.006 +0.000	1.125	+0.003 -0.003	1.555	+0.000 -0.002	1.687	+0.003 -0.003	0.937	0.250	0778250
1.750	+0.006 +0.000	1.125	+0.003 -0.003	1.572	+0.000 -0.002	1.710	+0.003 -0.003	0.750	0.254	6504450
1.875	+0.006 +0.000	1.250	+0.003 -0.003	1.678	+0.000 -0.002	1.812	+0.003 -0.003	0.937	0.250	0404150
2.000	+0.007 +0.000	1.375	+0.003 -0.003	1.805	+0.000 -0.002	1.937	+0.004 -0.004	0.937	0.250	0778450
2.000	+0.007 +0.000	1.375	+0.003 -0.003	1.822	+0.000 -0.002	1.962	+0.004 -0.004	0.750	0.254	0639150
2.125	+0.007 +0.000	1.500	+0.003 -0.003	1.928	+0.000 -0.002	2.062	+0.004 -0.004	0.937	0.250	0967650
2.250	+0.007 +0.000	1.625	+0.003 -0.003	2.055	+0.000 -0.003	2.187	+0.004 -0.004	0.937	0.250	1432650
2.250	+0.007 +0.000	1.625	+0.003 -0.003	2.071	+0.000 -0.003	2.211	+0.004 -0.004	0.750	0.254	0640450
2.375	+0.007 +0.000	1.750	+0.003 -0.003	2.180	+0.000 -0.003	2.312	+0.004 -0.004	0.750	0.250	0890850
2.375	+0.007 +0.000	1.750	+0.003 -0.003	2.180	+0.000 -0.003	2.312	+0.004 -0.004	0.937	0.250	0939850
2.500	+0.007 +0.000	1.875	+0.003 -0.003	2.305	+0.000 -0.003	2.437	+0.004 -0.004	0.937	0.250	0867250
2.500	+0.007 +0.000	1.875	+0.003 -0.003	2.321	+0.000 -0.003	2.460	+0.004 -0.004	0.750	0.254	6502250
2.625	+0.007 +0.000	2.000	+0.004 -0.004	2.428	+0.000 -0.003	2.562	+0.004 -0.004	0.937	0.250	1371050

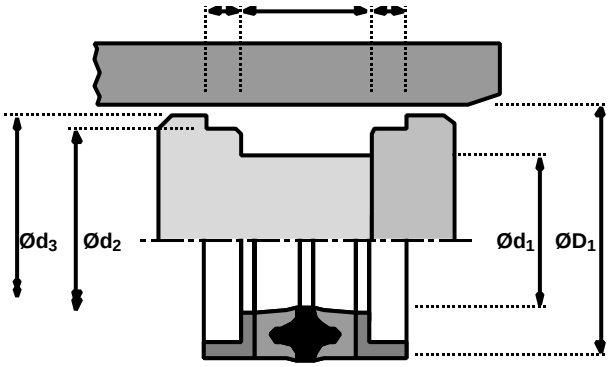

Piston seals

Hallite 58

inch

$ØD_1$	TOL H11	$Ød_1$	TOL js11	$Ød_2$	TOL h9	$Ød_3$	TOL js11	L_1 + 0.035 + 0.025	L_2 0 - 0.005	PART No.
2.750	+0.007 +0.000	2.000	+0.004 -0.004	2.485	+0.000 -0.003	2.687	+0.004 -0.004	1.187	0.250	1369150
2.750	+0.007 +0.000	2.000	+0.004 -0.004	2.524	+0.000 -0.003	2.710	+0.004 -0.004	0.937	0.254	0783250
2.875	+0.007 +0.000	2.125	+0.004 -0.004	2.610	+0.000 -0.003	2.812	+0.004 -0.004	1.187	0.250	0779650
3.000	+0.007 +0.000	2.250	+0.004 -0.004	2.735	+0.000 -0.003	2.937	+0.004 -0.004	1.187	0.250	1098450
3.000	+0.007 +0.000	2.250	+0.004 -0.004	2.774	+0.000 -0.003	2.960	+0.004 -0.004	0.937	0.254	6502450
3.125	+0.007 +0.000	2.375	+0.004 -0.004	2.858	+0.000 -0.003	3.062	+0.004 -0.004	1.187	0.250	1024850
3.250	+0.009 +0.000	2.500	+0.004 -0.004	2.985	+0.000 -0.003	3.187	+0.004 -0.004	1.187	0.250	0782450
3.250	+0.009 +0.000	2.500	+0.004 -0.004	3.024	+0.000 -0.003	3.210	+0.004 -0.004	0.937	0.254	1154150
3.375	+0.009 +0.000	2.625	+0.004 -0.004	3.108	+0.000 -0.003	3.312	+0.004 -0.004	1.187	0.250	0773850
3.375	+0.009 +0.000	2.625	+0.004 -0.004	3.110	+0.000 -0.003	3.312	+0.004 -0.004	1.000	0.250	2199650
3.500	+0.009 +0.000	2.750	+0.004 -0.004	3.235	+0.000 -0.003	3.437	+0.004 -0.004	1.187	0.250	0437850
3.500	+0.009 +0.000	2.750	+0.004 -0.004	3.273	+0.000 -0.003	3.460	+0.004 -0.004	0.937	0.254	6500550
3.625	+0.009 +0.000	2.875	+0.004 -0.004	3.360	+0.000 -0.003	3.562	+0.004 -0.004	1.187	0.250	1474550
3.750	+0.009 +0.000	3.000	+0.004 -0.004	3.485	+0.000 -0.003	3.687	+0.004 -0.004	1.187	0.250	0410550
3.875	+0.009 +0.000	3.125	+0.004 -0.004	3.610	+0.000 -0.003	3.812	+0.004 -0.004	1.187	0.250	0295850
4.000	+0.009 +0.000	3.250	+0.004 -0.004	3.735	+0.000 -0.003	3.937	+0.004 -0.004	1.187	0.250	1407750
4.000	+0.009 +0.000	3.250	+0.004 -0.004	3.772	+0.000 -0.003	3.958	+0.004 -0.004	0.937	0.254	6504750
4.250	+0.009 +0.000	3.500	+0.004 -0.004	3.985	+0.000 -0.003	4.187	+0.004 -0.004	1.187	0.250	1128850
4.250	+0.009 +0.000	3.500	+0.004 -0.004	4.022	+0.000 -0.003	4.210	+0.004 -0.004	0.937	0.254	6504550
4.500	+0.009 +0.000	3.500	+0.004 -0.004	4.234	+0.000 -0.003	4.437	+0.004 -0.004	1.500	0.375	0448850
4.625	+0.009 +0.000	3.625	+0.004 -0.004	4.355	+0.000 -0.003	4.582	+0.004 -0.004	1.250	0.254	6504350
4.750	+0.010 +0.000	3.750	+0.004 -0.004	4.483	+0.000 -0.003	4.700	+0.005 -0.005	1.250	0.254	0038250
4.750	+0.010 +0.000	3.750	+0.004 -0.004	4.485	+0.000 -0.003	4.687	+0.005 -0.005	1.500	0.375	1007050

Piston seals

Hallite

58

inch

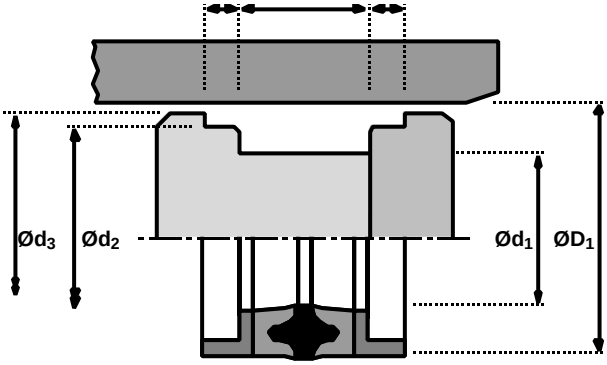

$ØD_1$	TOL H11	$Ød_1$	TOL js11	$Ød_2$	TOL h9	$Ød_3$	TOL js11	L_1 + 0.035 + 0.025	L_2 0 - 0.005	PART No.
5.000	+0.010 +0.000	4.000	+0.004 -0.004	4.730	+0.000 -0.004	4.956	+0.005 -0.005	1.250	0.254	6500650
5.000	+0.010 +0.000	4.000	+0.004 -0.004	4.735	+0.000 -0.004	4.937	+0.005 -0.005	1.500	0.375	0443050
5.250	+0.010 +0.000	4.250	+0.004 -0.004	4.980	+0.000 -0.004	5.187	+0.005 -0.005	1.500	0.375	0892250
5.500	+0.010 +0.000	4.500	+0.004 -0.004	5.236	+0.000 -0.004	5.437	+0.005 -0.005	1.500	0.375	0133250
5.500	+0.010 +0.000	4.500	+0.004 -0.004	5.235	+0.000 -0.004	5.456	+0.005 -0.005	1.250	0.254	6504150
5.750	+0.010 +0.000	4.750	+0.005 -0.005	5.484	+0.000 -0.004	5.687	+0.005 -0.005	1.500	0.375	1366950
6.000	+0.010 +0.000	5.000	+0.005 -0.005	5.728	+0.000 -0.004	5.954	+0.005 -0.005	1.250	0.254	0557950
6.000	+0.010 +0.000	5.000	+0.005 -0.005	5.736	+0.000 -0.004	5.937	+0.005 -0.005	1.500	0.375	1367050
6.250	+0.010 +0.000	5.250	+0.005 -0.005	5.984	+0.000 -0.004	6.187	+0.005 -0.005	1.500	0.375	0083350
6.500	+0.010 +0.000	5.500	+0.005 -0.005	6.227	+0.000 -0.004	6.454	+0.005 -0.005	1.250	0.254	6504650
6.500	+0.010 +0.000	5.500	+0.005 -0.005	6.236	+0.000 -0.004	6.437	+0.005 -0.005	1.500	0.375	1164150
6.750	+0.010 +0.000	5.750	+0.005 -0.005	6.484	+0.000 -0.004	6.687	+0.005 -0.005	1.500	0.375	1286150
7.000	+0.010 +0.000	6.000	+0.005 -0.005	6.736	+0.000 -0.004	6.937	+0.005 -0.005	1.500	0.375	1188850
7.500	+0.010 +0.000	6.250	+0.005 -0.005	7.240	+0.000 -0.004	7.437	+0.006 -0.006	1.875	0.375	1255250
8.000	+0.011 +0.000	7.000	+0.005 -0.005	7.740	+0.000 -0.005	7.937	+0.006 -0.006	1.250	0.375	0224350
9.000	+0.011 +0.000	7.750	+0.006 -0.006	8.740	+0.000 -0.005	8.937	+0.006 -0.006	1.875	0.375	1266650
9.000	+0.011 +0.000	8.000	+0.006 -0.006	8.736	+0.000 -0.005	8.937	+0.006 -0.006	1.250	0.375	1273750
10.000	+0.013 +0.000	9.000	+0.006 -0.006	9.740	+0.000 -0.005	9.937	+0.006 -0.006	1.250	0.375	0697650

Hallite

64

TECHNICAL DETAILS

METRIC ○ — ● INCH

OPERATING CONDITIONS

MAXIMUM SPEED	0.5 m/sec	1.5 ft/sec
TEMPERATURE RANGE	-30°C + 100°C	-22°F + 212°F
MAXIMUM PRESSURE	400 bar	6000 p.s.i.

SURFACE ROUGHNESS

	µmRa	µmRt	µinCLA	µinRMS
DYNAMIC SEALING FACE $ØD_1$	0.1 ↔ 0.4	4 max	4 ↔ 16	5 ↔ 18
STATIC SEALING FACE $Ød_1$ $Ød_2$	1.6 max	10 max	63 max	70 max
STATIC HOUSING FACES $Ød_3$ L_1 L_2	3.2 max	16 max	125 max	140 max

CHAMFERS & RADII

GROOVE SECTION ≤ S mm	5.0	7.0	8.0	9.0	11.0	12.5
MIN CHAMFER C mm	2.5	4.0	5.0	5.0	6.5	6.5
MAX FILLET RAD r_1 mm	0.4	0.4	0.4	0.4	0.4	0.4
MAX FILLET RAD r_2 mm	0.2	0.2	0.2	0.2	0.4	0.4

TOLERANCES

	$ØD_1$	$Ød_1$	$Ød_2$	$Ød_3$	L_1	L_2
mm	H10	h9	h9	h11	+0.2 -0	+0.1 -0

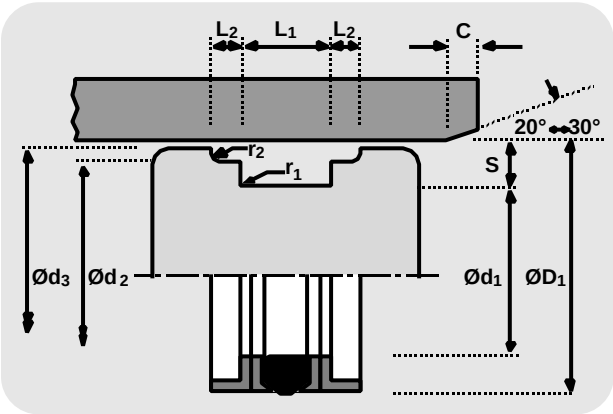

FEATURES

- COMPACT SEAL DESIGN
- EASY ASSEMBLY
- POSITIVE NO DRIFT SEAL

DESIGN

A robust seal assembly designed specifically for one piece pistons, the Hallite 64 double acting seal uses a rubber sealing element which has proved itself in service to be extremely wear resistant and capable of working most effectively in a wide variety of medium to heavy duty applications.

The assembly comprises a rubber seal, two split support rings and two split bearings, one of each located either side of the seal. The nitrile rubber seal is designed to have its section compressed by the housing, to ensure a low pressure seal, and when pressurised be protected from extrusion damage by the extending lips of the support ring. The support ring is manufactured from a tough but flexible polymer and scarf cut for assembly.

L section bearings provide the support and guidance for the piston and the other parts of the seal.

For seals up to 90mm diameter $\pm d_3$ is not required. Above 90mm diameter the seals benefit from the additional support of the L-section bearings.

All seals are also suitable for two piece housings.

Note : Other sizes of this design of seal are shown under Hallite 50, 53 and 68. Also see Hallite 753 for interchangeable sizes.

Piston seals

Hallite

64

metric

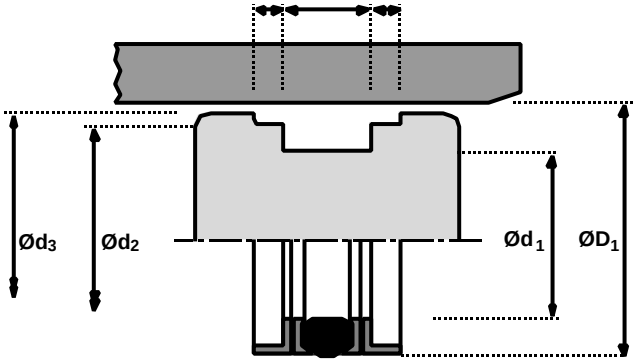

$ØD_1$	TOL H10	$Ød_1$	TOL h9	$Ød_2$	TOL h9	$Ød_3$	TOL h11	L_1 + 0.2 - 0	L_2 + 0.1 - 0	PART No.
32	+0.10 +0.00	22	+0.00 -0.05	28.0	+0.000 -0.052	31.0	+0.00 -0.16	15.5	2.60	6600100
40	+0.10 +0.00	26	+0.00 -0.05	36.0	+0.000 -0.062	39.0	+0.00 -0.16	15.5	2.60	6600200
50	+0.10 +0.00	34	+0.00 -0.06	46.0	+0.000 -0.062	49.0	+0.00 -0.16	20.5	3.10	6600300
55	+0.12 +0.00	39	+0.00 -0.06	51.0	+0.000 -0.074	54.0	+0.00 -0.19	20.5	3.10	6600400
60	+0.12 +0.00	44	+0.00 -0.06	56.0	+0.000 -0.074	59.0	+0.00 -0.19	20.5	3.10	6600500
63	+0.12 +0.00	47	+0.00 -0.06	59.0	+0.000 -0.074	62.0	+0.00 -0.19	20.5	3.10	6600600
65	+0.12 +0.00	49	+0.00 -0.06	61.0	+0.000 -0.074	64.0	+0.00 -0.19	20.5	3.10	1705210
70	+0.12 +0.00	54	+0.00 -0.07	66.0	+0.000 -0.074	69.0	+0.00 -0.19	20.5	3.10	6600700
80	+0.12 +0.00	62	+0.00 -0.07	76.0	+0.000 -0.074	79.0	+0.00 -0.19	22.5	3.60	1705110
90	+0.14 +0.00	72	+0.00 -0.07	86.0	+0.000 -0.087	89.0	+0.00 -0.22	22.5	3.60	6600800
100	+0.14 +0.00	82	+0.00 -0.09	96.0	+0.000 -0.087	99.0	+0.00 -0.22	22.5	3.60	6600900
110	+0.14 +0.00	92	+0.00 -0.09	106.0	+0.000 -0.087	109.0	+0.00 -0.22	22.5	3.60	6601000
125	+0.16 +0.00	103	+0.00 -0.09	121.0	+0.000 -0.100	124.0	+0.00 -0.25	26.5	5.10	6601100
140	+0.16 +0.00	118	+0.00 -0.09	136.0	+0.000 -0.100	139.0	+0.00 -0.25	26.5	5.10	6601200
160	+0.16 +0.00	138	+0.00 -0.10	156.0	+0.000 -0.100	159.0	+0.00 -0.25	26.5	5.10	6601300
250	+0.19 +0.00	225	+0.00 -0.12	246.0	+0.000 -0.115	249.0	+0.00 -0.29	31.5	6.60	6601400

Hallite

65

TECHNICAL DETAILS

METRIC ○ — INCH ●

OPERATING CONDITIONS

	METRIC	INCH
MAXIMUM SPEED	0.5 m/sec	1.5 ft/sec
TEMPERATURE RANGE	-30°C + 100°C	-22°F + 212°F
MAXIMUM PRESSURE	200 bar	3000 p.s.i.

SURFACE ROUGHNESS

	µmRa	µmRt	µinCLA	µinRMS
DYNAMIC SEALING FACE $ØD_1$	0.1 ↔ 0.4	4 max	4 ↔ 16	5 ↔ 18
STATIC SEALING FACE $Ød_1$ $Ød_2$	1.6 max	10 max	63 max	70 max
STATIC HOUSING FACES $Ød_3$ L_1 L_2	3.2 max	16 max	125 max	140 max

CHAMFERS & RADII

GROOVE SECTION ≤ S mm	3.75	5.00	6.50	8.00	10.00
MIN CHAMFER C mm	2.00	2.50	4.00	5.00	5.00
MAX FILLET RAD r_1 mm	0.40	0.40	0.40	0.80	0.80
MAX FILLET RAD r_2 mm	0.20	0.20	0.20	0.40	0.40
GROOVE SECTION ≤ S in	0.156	0.187	0.250	0.312	0.375
MIN CHAMFER C in	0.078	0.093	0.125	0.156	0.187
MAX FILLET RAD r_1 in	0.016	0.016	0.016	0.032	0.032
MAX FILLET RAD r_2 in	0.008	0.008	0.008	0.016	0.016

TOLERANCES

	$ØD_1$	$Ød_1$	$Ød_2$	$Ød_3$	L_1		L_2	
mm	H10	h9	h9	h11	+0.4	+0.13	0	-0.13
in	H10	h9	h9	h11	+0.015	+0.005	0	-0.005

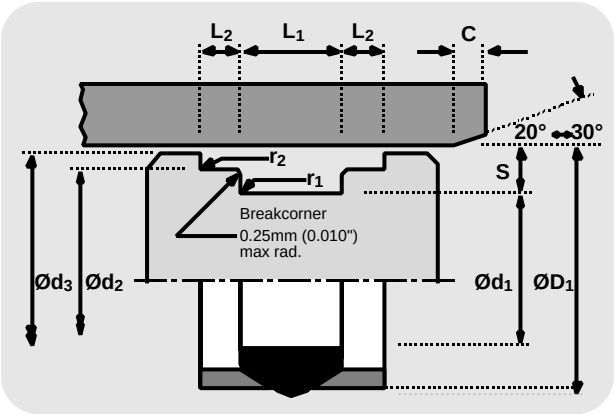

DESIGN

Ideal for light to medium duty one piece piston applications, the Hallite 65 double acting seal is a simple, effective and economical design for pressures up to 200 bar/3000 p.s.i. Its compact dimensions enable the designer to keep the length of the piston to a minimum.

It is an assembly of a continuous rubber seal and two scarf cut bearings.

The nitrile rubber seal is designed to be pre-loaded by the housing to ensure an effective seal at low pressure. The outward thrust of the rubber seal on the bearings as it reacts to increasing pressure prevents any extrusion damage in the sealing area.

The polyacetal bearings are proportioned to support the piston and its side load.

FEATURES

- COMPACT DESIGN
- EASY ASSEMBLY
- LOW WEAR
- LONG LIFE

Piston seals

Hallite 65

metric

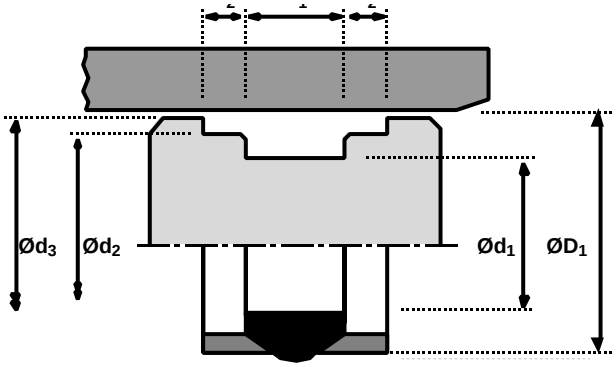

$ØD_1$	TOL H10	$Ød_1$	TOL h9	$Ød_2$	TOL h9	$Ød_3$	TOL h11	L_1 + 0.4 + 0.13	L_2 0 - 0.13	PART No.
25	+0.08 +0.00	17.5	+0.00 -0.04	21.3	+0.000 -0.052	24.0	+0.00 -0.13	8.50	3.25	2218210
32	+0.10 +0.00	22	+0.00 -0.05	27.5	+0.000 -0.052	31.0	+0.00 -0.16	11.00	4.00	2218110
40	+0.10 +0.00	30	+0.00 -0.05	35.5	+0.000 -0.062	39.0	+0.00 -0.16	11.00	4.00	2218010
50	+0.10 +0.00	40	+0.00 -0.06	45.5	+0.000 -0.062	49.0	+0.00 -0.16	11.00	4.00	2217910
63	+0.12 +0.00	53	+0.00 -0.07	58.5	+0.000 -0.074	61.5	+0.00 -0.19	11.00	4.00	2217810
80	+0.12 +0.00	70	+0.00 -0.07	75.5	+0.000 -0.074	78.5	+0.00 -0.19	11.00	4.00	2217610
92	+0.14 +0.00	82	+0.00 -0.09	87.5	+0.000 -0.087	90.5	+0.00 -0.22	11.00	4.00	2240410
100	+0.14 +0.00	87	+0.00 -0.09	93.8	+0.000 -0.087	98.5	+0.00 -0.22	14.00	6.00	0352510
125	+0.16 +0.00	112	+0.00 -0.09	118.8	+0.000 -0.087	123.5	+0.00 -0.25	14.00	6.00	0315810
140	+0.16 +0.00	124	+0.00 -0.10	132.0	+0.000 -0.100	138.5	+0.00 -0.25	17.50	8.75	0317710
160	+0.16 +0.00	140	+0.00 -0.10	151.4	+0.000 -0.100	158.5	+0.00 -0.25	25.00	12.50	0315910
180	+0.16 +0.00	160	+0.00 -0.10	171.4	+0.000 -0.100	178.5	+0.00 -0.25	25.00	12.50	0316010
200	+0.19 +0.00	180	+0.00 -0.10	191.4	+0.000 -0.115	198.5	+0.00 -0.29	25.00	12.50	0316910

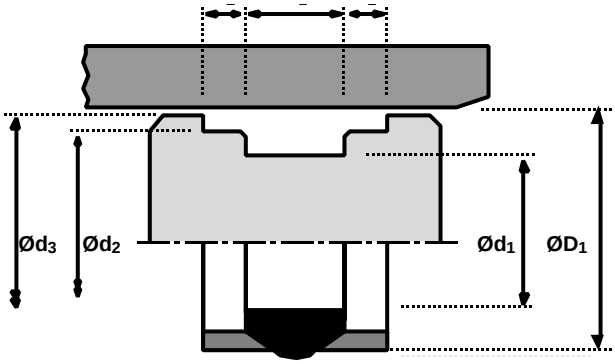

Piston seals

Hallite 65

inch

$ØD_1$	TOL H10	$Ød_1$	TOL h9	$Ød_2$	TOL h9	$Ød_3$	TOL h11	L_1 + 0.015 + 0.005	L_2 0 - 0.005	PART No.
1.000	+0.003 +0.000	0.687	+0.000 -0.002	0.829	+0.000 -0.002	0.937	+0.000 -0.005	0.343	0.125	2221210
1.250	+0.004 +0.000	0.937	+0.000 -0.002	1.079	+0.000 -0.002	1.187	+0.000 -0.006	0.343	0.125	2221310
1.500	+0.004 +0.000	1.125	+0.000 -0.002	1.324	+0.000 -0.002	1.437	+0.000 -0.006	0.437	0.150	2219610
1.750	+0.004 +0.000	1.375	+0.000 -0.002	1.574	+0.000 -0.002	1.687	+0.000 -0.006	0.437	0.150	2220910
2.000	+0.005 +0.000	1.625	+0.000 -0.002	1.824	+0.000 -0.002	1.937	+0.000 -0.006	0.437	0.150	2224010
2.250	+0.005 +0.000	1.875	+0.000 -0.002	2.075	+0.000 -0.003	2.187	+0.000 -0.007	0.437	0.150	2221110
2.500	+0.005 +0.000	2.125	+0.000 -0.003	2.325	+0.000 -0.003	2.437	+0.000 -0.007	0.437	0.150	2224110
2.750	+0.005 +0.000	2.375	+0.000 -0.003	2.575	+0.000 -0.003	2.687	+0.000 -0.007	0.437	0.150	2219510
2.875	+0.005 +0.000	2.500	+0.000 -0.003	2.700	+0.000 -0.003	2.812	+0.000 -0.007	0.437	0.150	2225210
3.000	+0.005 +0.000	2.625	+0.000 -0.003	2.825	+0.000 -0.003	2.937	+0.000 -0.007	0.437	0.150	2224210
3.250	+0.006 +0.000	2.875	+0.000 -0.003	3.075	+0.000 -0.003	3.187	+0.000 -0.009	0.437	0.150	2219710
3.500	+0.006 +0.000	3.000	+0.000 -0.003	3.270	+0.000 -0.003	3.437	+0.000 -0.009	0.562	0.210	0177610
3.750	+0.006 +0.000	3.250	+0.000 -0.003	3.520	+0.000 -0.003	3.687	+0.000 -0.009	0.562	0.210	0178810
4.000	+0.006 +0.000	3.500	+0.000 -0.003	3.770	+0.000 -0.003	3.937	+0.000 -0.009	0.562	0.210	1172310
4.250	+0.006 +0.000	3.750	+0.000 -0.003	4.020	+0.000 -0.003	4.187	+0.000 -0.009	0.562	0.210	0309210
4.500	+0.006 +0.000	4.000	+0.000 -0.003	4.270	+0.000 -0.003	4.437	+0.000 -0.009	0.562	0.210	0418910
4.750	+0.006 +0.000	4.250	+0.000 -0.003	4.520	+0.000 -0.003	4.687	+0.000 -0.009	0.562	0.210	1155810
5.000	+0.006 +0.000	4.375	+0.000 -0.003	4.689	+0.000 -0.003	4.937	+0.000 -0.010	0.687	0.344	1175410
5.250	+0.006 +0.000	4.625	+0.000 -0.003	4.938	+0.000 -0.004	5.187	+0.000 -0.010	0.687	0.344	1173710
5.500	+0.006 +0.000	4.875	+0.000 -0.004	5.188	+0.000 -0.004	5.437	+0.000 -0.010	0.687	0.344	1173610
6.000	+0.006 +0.000	5.250	+0.000 -0.004	5.712	+0.000 -0.004	5.937	+0.000 -0.010	1.000	0.500	0300110
6.500	+0.006 +0.000	5.750	+0.000 -0.004	6.212	+0.000 -0.004	6.437	+0.000 -0.010	1.000	0.500	0047010
7.000	+0.006 +0.000	6.250	+0.000 -0.004	6.712	+0.000 -0.004	6.937	+0.000 -0.010	1.000	0.500	0314110

Piston seals

Hallite

65

inch

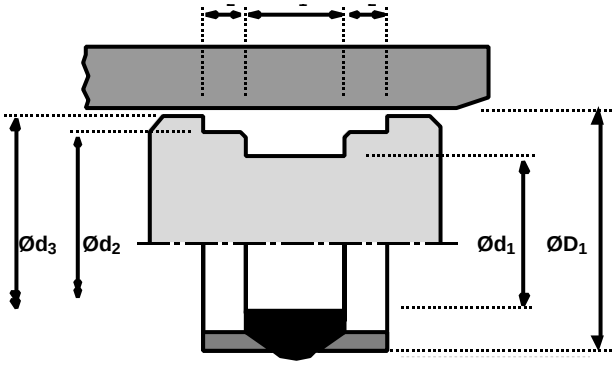

$ØD_1$	TOL H10	$Ød_1$	TOL h9	$Ød_2$	TOL h9	$Ød_3$	TOL h11	L_1 + 0.015 + 0.005	L_2 0 - 0.005	PART No.
7.500	+0.007 +0.000	6.750	+0.000 -0.004	7.212	+0.000 -0.005	7.437	+0.000 -0.011	1.000	0.500	0363410
8.000	+0.007 +0.000	7.250	+0.000 -0.005	7.712	+0.000 -0.005	7.937	+0.000 -0.011	1.000	0.500	0045110
9.000	+0.007 +0.000	8.250	+0.000 -0.005	8.712	+0.000 -0.005	8.937	+0.000 -0.011	1.000	0.500	0045510

Piston seals

Hallite

66

TECHNICAL DETAILS

METRIC ○ INCH ●

OPERATING CONDITIONS

MAXIMUM SPEED	0.5 m/sec	1.5 ft/sec
TEMPERATURE RANGE	-30°C + 100°C	-22°F + 212°F
MAXIMUM PRESSURE	170 bar	2500 p.s.i.

MAXIMUM EXTRUSION GAP

Figures show the maximum permissible gap all on one side using the minimum clearance Ø and maximum bore Ø

PRESSURE bar	50	100	140	170
PRESSURE p.s.i.	750	1500	2000	2500
MAXIMUM GAP mm	0.020	0.018	0.017	0.016

SURFACE ROUGHNESS

	µmRa	µmRt	µinCLA	µinRMS
DYNAMIC SEALING FACE $ØD_1$	0.8 max	5 max	32 max	35 max
STATIC SEALING FACE $Ød_1$	1.6 max	10 max	63 max	70 max
STATIC HOUSING FACES L_1	3.2 max	16 max	125 max	140 max

CHAMFERS & RADII

SEAL DIAMETER $\leq ØD_1$ in	2.000	3.000	6.500
MIN CHAMFER C in	0.187	0.217	0.250
MAX FILLET RAD r_1 in	0.062	0.093	0.125

TOLERANCES

	$ØD_1$	$Ød_1$	$Ød_2$	L_1
in	See overleaf	h11	max	0 -0.005

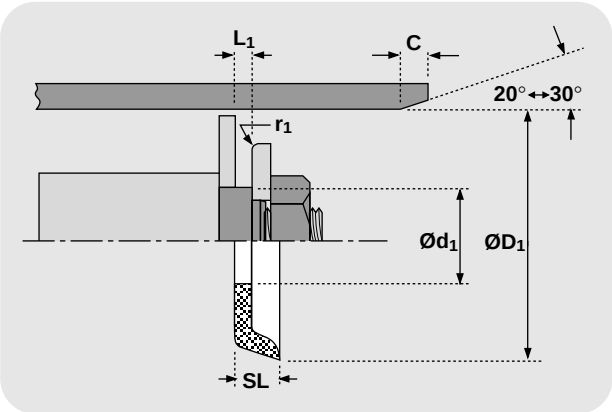

DESIGN

Hallite 66 fabric cup seal is designed for pistons in either single or double acting medium duty applications. Manufactured from rubberised fabric, this provides the seal with a lip which has strength and durability, capable of operating in wide tolerance tube with a generous surface finish. Wear and friction are kept to a minimum because of the ability of the rubberised fabric to retain lubricant in the seal area. The standard range is designed to give a satisfactory performance when used with the recommended operating conditions and installation details. Each size in the standard range can be supplied with different diameter centre holes, $\pm d_1$, by specifying the appropriate number for the sixth digit in the part number. Many other sizes are available so if your requirements are not met by the standard range please contact your Hallite representative.

FEATURES

- PRECISION MOULDED
- LONG LIFE
- WIDE SIZE RANGE
- TOLERATES CONTAMINATION

Piston seals

Hallite

68

OPERATING CONDITIONS				
MAXIMUM SPEED	0.5 m/sec		1.5 ft/sec	
TEMPERATURE RANGE	-30°C + 100°C		-22°F + 212°F	
MAXIMUM PRESSURE	500 bar		7500 p.s.i.	
SURFACE ROUGHNESS	µmRa	µmRt	µinCLA	µinRMS
DYNAMIC SEALING FACE $ØD_1$	0.1 ↔ 0.4	4 max	4 ↔ 16	5 ↔ 18
STATIC SEALING FACE $Ød_1$ $Ød_2$	1.6 max	10 max	63 max	70 max
STATIC HOUSING FACES $Ød_3$ L_1 L_2	3.2 max	16 max	125 max	140 max

CHAMFERS & RADII					
GROOVE SECTION ≤ S mm	5.0	7.5	10.0	12.5	15.0
MIN CHAMFER C mm	2.5	4.0	5.0	6.5	7.5
MAX FILLET RAD r_1 mm	0.4	0.4	0.4	0.8	0.8
MAX FILLET RAD r_2 mm	0.4	0.4	0.4	0.8	0.8

TOLERANCES	$ØD_1$	$Ød_1$	$Ød_2$	$Ød_3$	L_1		L_2	
mm	H10	h9	h9	h11	+0.35	+0.1	+0.1	-0

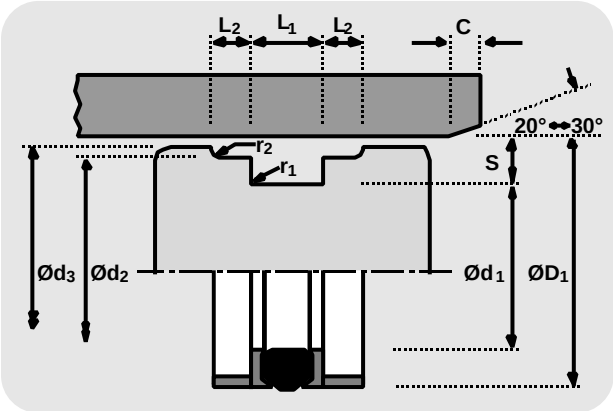

FEATURES

- ISO 6547 HOUSING
- COMPACT GROOVE DESIGN
- POSITIVE NO DRIFT SEAL

DESIGN

A robust seal assembly designed specifically for one piece pistons, the Hallite 68 double acting seal uses a rubber sealing element which has proved itself in service to be extremely wear resistant and capable of working most effectively in a wide variety of medium to heavy duty applications. The seal is also suitable for two piece pistons.

The assembly comprises a rubber seal, two split support rings and two split bearings, one of each located either side of the seal. The nitrile rubber seal is designed to have its section compressed by the housing, to ensure a low pressure seal, and when pressurised be protected from extrusion damage by the extending lips of the support ring. The support ring is manufactured from a tough but flexible polymer and scarf cut for assembly.

Polyacetal rectangular section bearings provide the support and guidance for the piston and the other parts of the seal.

NB: All sizes are suitable for the larger radial section housings to ISO 6547 and are suffixed ‡

Other sizes of this design of seal are shown under Hallite 50, 53 and 64.

Piston seals

Hallite

68

metric

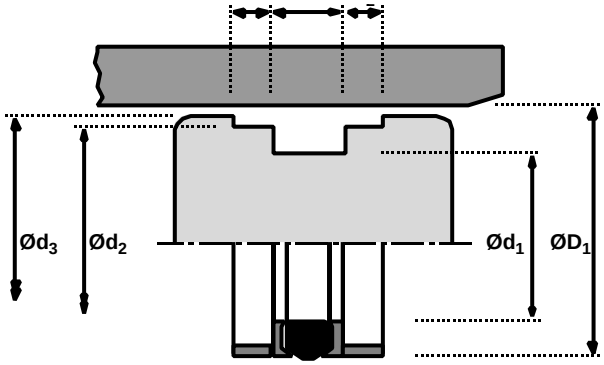

$ØD_1$	TOL H10	$Ød_1$	TOL h9	$Ød_2$	TOL h9	$Ød_3$	TOL h11	L_1 + 0.35 + 0.1	L_2 + 0.1 - 0	PART No.
25	+0.08 +0.00	15	+0.00 -0.04	22.0	+0.000 -0.052	24.0	+0.00 -0.13	12.50	4.0	6594610‡
32	+0.10 +0.00	22	+0.00 -0.05	29.0	+0.000 -0.052	31.0	+0.00 -0.16	12.50	4.0	2249320‡
40	+0.10 +0.00	30	+0.00 -0.05	37.0	+0.000 -0.062	39.0	+0.00 -0.16	12.50	4.0	2249420‡
50	+0.10 +0.00	35	+0.00 -0.06	46.0	+0.000 -0.062	48.5	+0.00 -0.16	20.00	5.0	0074020‡
63	+0.12 +0.00	48	+0.00 -0.06	59.0	+0.000 -0.074	61.5	+0.00 -0.19	20.00	5.0	6594710‡
80	+0.12 +0.00	60	+0.00 -0.07	75.0	+0.000 -0.074	78.0	+0.00 -0.19	25.00	6.3	0073830‡
100	+0.14 +0.00	80	+0.00 -0.07	95.0	+0.000 -0.087	98.0	+0.00 -0.22	25.00	6.3	0083620‡
125	+0.16 +0.00	100	+0.00 -0.09	119.0	+0.000 -0.087	123.0	+0.00 -0.25	32.00	10.0	0087540‡
160	+0.16 +0.00	135	+0.00 -0.10	154.0	+0.000 -0.100	158.0	+0.00 -0.25	32.00	10.0	0089930‡
200	+0.l9 +0.00	170	+0.00 -0.10	192.0	+0.000 -0.115	197.0	+0.00 -0.29	36.00	12.5	1270120‡
250	+0.19 +0.00	220	+0.00 -0.12	242.0	+0.000 -0.115	247.0	+0.00 -0.29	36.00	12.5	1264320‡

Piston seals

Hallite

71

OPERATING CONDITIONS				
MAXIMUM SPEED	0.5 m/sec		1.5 ft/sec	
TEMPERATURE RANGE	-30°C + 100°C		-22°F + 212°F	
MAXIMUM PRESSURE	700 bar		10,000 p.s.i.	
SURFACE ROUGHNESS	µmRa	µmRt	µinCLA	µinRMS
DYNAMIC SEALING FACE $ØD_1$	0.1 ↔ 0.4	4 max	4 ↔ 16	5 ↔ 18
STATIC SEALING FACE $Ød_1$ $Ød_2$	1.6 max	10 max	63 max	70 max
STATIC HOUSING FACES $Ød_3$ L_1 L_2	3.2 max	16 max	125 max	140 max

CHAMFERS & RADII						
GROOVE SECTION ≤ S mm	5.0	7.5	10.0	12.5	15.0	
MIN CHAMFER C mm	2.5	4.0	5.0	6.5	7.5	
MIN CHAMFER C_1 mm	1.0	1.0	1.0	1.5	1.5	
MAX FILLET RAD r_1 mm	0.2	0.2	0.2	0.4	0.4	
MAX FILLET RAD r_2 mm	0.2	0.2	0.2	0.4	0.4	
GROOVE SECTION ≤ S in	0.187	0.250	0.312	0.375	0.500	0.625
MIN CHAMFER C in	0.093	0.125	0.156	0.187	0.217	0.250
MIN CHAMFER C_1 in	0.032	0.032	0.032	0.062	0.062	0.062
MAX FILLET RAD r_1 in	0.008	0.008	0.008	0.008	0.016	0.016
MAX FILLET RAD r_2 in	0.008	0.008	0.008	0.008	0.016	0.016

TOLERANCES	$ØD_1$	$Ød_1$	$Ød_1$	$Ød_1$	L_1		L_2	
mm	H8	js11	h9	js11	+0.50	+0.25	0	-0.15
in	H8	js11	h9	js11	+0.02	+0.01	0	-0.005

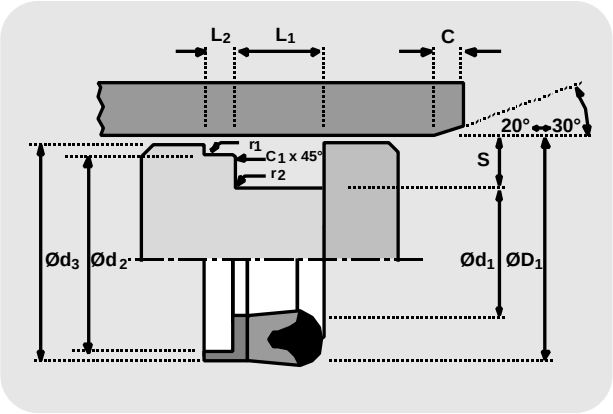

DESIGN

The Hallite 71 single acting fluid seal assembly consists of the standard Hallite 18 single acting fluid seal and the Hallite 62 L shaped bearing ring (wear ring). Manufactured in very hard wearing polyacetal resin, the bearing ring was originally designed to replace conventional bronze or cast iron piston bearings, reducing the problem of cylinder bore scoring to a minimum and allowing the designer to use compact, strong, cost effective steel pistons. The inherent nature of the material enables it to settle to the bore size once it has been pressurized, therefore providing an excellent anti-extrusion member and also increasing seal life.

Due to its flexibility it should not be used primarily as a bearing where severe knuckling or excessive side loading may occur. Under these conditions we suggest the use of conventional bronze or cast iron bearings or the additional use of the Hallite 506 bearings.

The proportions of the range have been determined to give a satisfactory performance when used with the recommended operating conditions.

Other sizes are available outside this range.

Piston seals

Hallite

71

metric

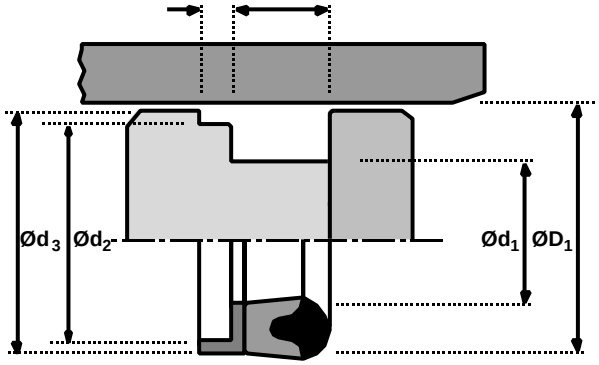

$ØD_1$	TOL H8	$Ød_1$	TOL js11	$Ød_2$	TOL h9	$Ød_3$	TOL js11	L_1 + 0.50 + 0.25	L_2 0 - 0.15	PART No.
40	+0.062 +0.000	25	+0.07 -0.07	34.85	+0.000 -0.062	39.00	+0.08 -0.08	13.50	6.00	0472810
50	+0.062 +0.000	35	+0.08 -0.08	44.85	+0.000 -0.062	48.50	+0.08 -0.08	13.50	6.00	0474610
60	+0.074 +0.000	40	+0.08 -0.08	53.85	+0.000 -0.074	58.50	+0.10 -0.10	17.00	7.00	0282010
63	+0.074 +0.000	48	+0.08 -0.08	57.85	+0.000 -0.074	61.50	+0.10 -0.10	13.50	6.00	0205210
65	+0.074 +0.000	50	+0.08 -0.08	59.85	+0.000 -0.074	63.50	+0.10 -0.10	13.50	6.00	0383810
70	+0.074 +0.000	50	+0.08 -0.08	63.85	+0.000 -0.074	68.00	+0.10 -0.10	17.00	7.00	0294610
75	+0.074 +0.000	55	+0.10 -0.10	68.85	+0.000 -0.074	73.00	+0.10 -0.10	17.00	7.00	0818610
80	+0.074 +0.000	60	+0.10 -0.10	73.85	+0.000 -0.074	78.00	+0.10 -0.10	17.00	7.00	0294910
85	+0.087 +0.000	65	+0.10 -0.10	78.85	+0.000 -0.074	83.00	+0.11 -0.11	17.00	7.00	0388610
90	+0.087 +0.000	70	+0.10 -0.10	83.85	+0.000 -0.087	88.00	+0.11 -0.11	17.00	7.00	0296010
100	+0.087 +0.000	80	+0.10 -0.10	93.85	+0.000 -0.087	98.00	+0.11 -0.11	17.00	7.00	0295110
110	+0.087 +0.000	90	+0.11 -0.11	103.85	+0.000 -0.087	108.00	+0.11 -0.11	18.00	7.00	0712410
120	+0.087 +0.000	100	+0.11 -0.11	113.85	+0.000 -0.087	118.00	+0.11 -0.11	17.00	7.00	0296110
125	+0.100 +0.000	100	+0.11 -0.11	118.85	+0.000 -0.087	123.00	+0.13 -0.13	22.00	9.50	0418610
130	+0.100 +0.000	104	+0.11 -0.11	123.85	+0.000 -0.100	128.00	+0.13 -0.13	22.00	9.50	0244310
140	+0.100 +0.000	120	+0.11 -0.11	133.85	+0.000 -0.100	138.00	+0.13 -0.13	15.00	7.00	0250510
150	+0.100 +0.000	120	+0.11 -0.11	143.85	+0.000 -0.100	148.00	+0.13 -0.13	27.00	9.50	1289510
160	+0.100 +0.000	135	+0.13 -0.13	153.85	+0.000 -0.100	158.00	+0.13 -0.13	22.00	9.50	0080410
180	+0.100 +0.000	160	+0.13 -0.13	173.85	+0.000 -0.100	178.00	+0.13 -0.13	18.00	7.00	1283110

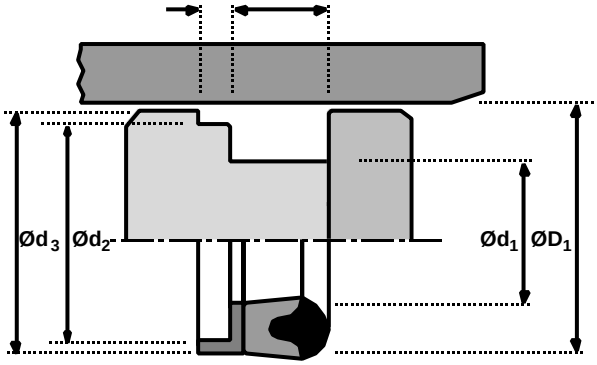

Piston seals

Hallite 71

inch

$ØD_1$	TOL H8	$Ød_1$	TOL js11	$Ød_2$	TOL h9	$Ød_3$	TOL js11	L_1 + 0.02 + 0.01	L_2 0 - 0.005	PART No.
1.000	+0.002 +0.000	0.625	+0.002 -0.002	0.868	+0.000 -0.002	0.968	+0.003 -0.003	0.343	0.187	1247610
1.250	+0.002 +0.000	0.750	+0.003 -0.003	1.118	+0.000 -0.002	1.218	+0.003 -0.003	0.437	0.250	0403710
1.375	+0.002 +0.000	0.875	+0.003 -0.003	1.238	+0.000 -0.002	1.343	+0.003 -0.003	0.437	0.250	0401310
1.500	+0.002 +0.000	1.000	+0.003 -0.003	1.371	+0.000 -0.002	1.468	+0.003 -0.003	0.437	0.250	0422410
1.750	+0.002 +0.000	1.125	+0.003 -0.003	1.555	+0.000 -0.002	1.687	+0.003 -0.003	0.531	0.250	0778210
2.000	+0.003 +0.000	1.375	+0.003 -0.003	1.805	+0.000 -0.002	1.937	+0.004 -0.004	0.531	0.250	0778410
2.250	+0.003 +0.000	1.625	+0.003 -0.003	2.055	+0.000 -0.003	2.187	+0.004 -0.004	0.531	0.250	1432610
2.375	+0.003 +0.000	1.750	+0.003 -0.003	2.180	+0.000 -0.003	2.312	+0.004 -0.004	0.531	0.250	0939810
2.500	+0.003 +0.000	1.875	+0.003 -0.003	2.305	+0.000 -0.003	2.437	+0.004 -0.004	0.531	0.250	0867210
2.625	+0.003 +0.000	2.000	+0.004 -0.004	2.428	+0.000 -0.003	2.562	+0.004 -0.004	0.531	0.250	1371010
2.750	+0.003 +0.000	2.000	+0.004 -0.004	2.485	+0.000 -0.003	2.687	+0.004 -0.004	0.687	0.250	1369110
3.000	+0.003 +0.000	2.250	+0.004 -0.004	2.735	+0.000 -0.003	2.937	+0.004 -0.004	0.687	0.250	1098410
3.125	+0.003 +0.000	2.375	+0.004 -0.004	2.860	+0.000 -0.003	3.062	+0.004 -0.004	0.687	0.250	1024810
3.250	+0.003 +0.000	2.500	+0.004 -0.004	2.985	+0.000 -0.003	3.187	+0.004 -0.004	0.687	0.250	0782410
3.500	+0.003 +0.000	2.750	+0.004 -0.004	3.235	+0.000 -0.003	3.437	+0.004 -0.004	0.687	0.250	0437810
3.750	+0.003 +0.000	3.000	+0.004 -0.004	3.485	+0.000 -0.003	3.687	+0.004 -0.004	0.687	0.250	0410510
4.000	+0.003 +0.000	3.250	+0.004 -0.004	3.735	+0.000 -0.003	3.937	+0.004 -0.004	0.687	0.250	1407710
4.250	+0.003 +0.000	3.500	+0.004 -0.004	3.985	+0.000 -0.003	4.187	+0.004 -0.004	0.687	0.250	1128810
4.500	+0.003 +0.000	3.500	+0.004 -0.004	4.234	+0.000 -0.003	4.437	+0.004 -0.004	0.875	0.375	0448810
4.750	+0.004 +0.000	3.750	+0.004 -0.004	4.485	+0.000 -0.003	4.687	+0.004 -0.004	0.875	0.375	1007010
5.000	+0.004 +0.000	4.000	+0.004 -0.004	4.735	+0.000 -0.004	4.937	+0.005 -0.005	0.875	0.375	0443010
5.250	+0.004 +0.000	4.250	+0.004 -0.004	4.985	+0.000 -0.004	5.187	+0.005 -0.005	0.875	0.375	0892210
5.500	+0.004 +0.000	4.500	+0.004 -0.004	5.236	+0.000 -0.004	5.437	+0.005 -0.005	0.875	0.375	0133210

Piston seals

Hallite

71

inch

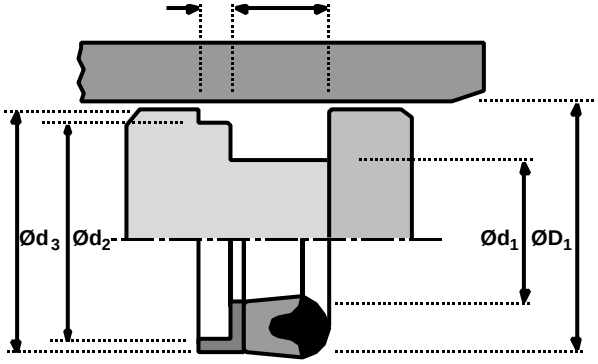

$ØD_1$	TOL H8	$Ød_1$	TOL js11	$Ød_2$	TOL h9	$Ød_3$	TOL js11	L_1 + 0.50 + 0.25	L_2 0 - 0.15	PART No.
6.000	+0.004 +0.000	5.000	+0.005 -0.005	5.736	+0.000 -0.004	5.937	+0.005 -0.005	0.875	0.375	1367010
6.500	+0.004 +0.000	5.500	+0.005 -0.005	6.236	+0.000 -0.004	6.437	+0.005 -0.005	0.875	0.375	1164110
7.000	+0.004 +0.000	6.000	+0.005 -0.005	6.736	+0.000 -0.004	6.937	+0.005 -0.005	0.875	0.375	1188810

Piston seals

Hallite

77

OPERATING CONDITIONS					
MAXIMUM SPEED	0.5 m/sec			1.5 ft/sec	
TEMPERATURE RANGE	-30°C + 100°C			-22°F + 212°F	
MAXIMUM PRESSURE	350 bar			6000 p.s.i.	
SURFACE ROUGHNESS	µmRa	µmRt		µinCLA	µinRMS
DYNAMIC SEALING FACE $ØD_1$	0.1 ↔ 0.4	4 max		4 ↔ 16	5 ↔ 18
STATIC SEALING FACE $Ød_1$ $Ød_2$	1.6 max	10 max		63 max	70 max
STATIC HOUSING FACES $Ød_3$ L_1 L_2	3.2 max	16 max		125 max	140 max
CHAMFERS & RADII					
GROOVE SECTION ≤ S mm	3.75	5.00	6.50		
MIN CHAMFER C mm	2.00	2.50	4.00		
MAX FILLET RAD r_1 mm	0.40	0.40	0.40		
MAX FILLET RAD r_2 mm	0.20	0.20	0.20		
GROOVE SECTION ≤ S in	0.156	0.187	0.250		
MIN CHAMFER C in	0.078	0.093	0.125		
MAX FILLET RAD r_1 in	0.016	0.016	0.016		
MAX FILLET RAD r_2 in	0.008	0.008	0.008		

TOLERANCES	$ØD_1$	$Ød_1$	$Ød_2$	$Ød_3$	L_1		L_2	
mm	H10	h9	h9	h11	+0.4	+0.13	0	-0.13
in	H10	h9	h9	h11	+0.015	+0.005	0	-0.005

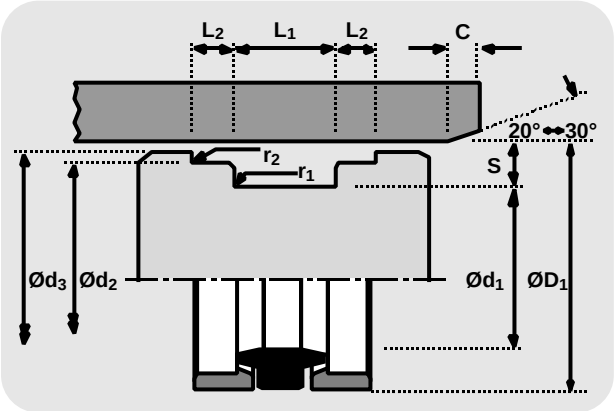

DESIGN

Ideal for light to medium duty one piece piston applications, the Hallite 77 seal is a simple, effective and economical design. Its compact dimensions enable the designer to keep the length of the piston to a minimum.

It is an assembly of a continuous rubber seal and two scarf cut bearings.

The nitrile rubber seal is designed to be pre-loaded by the housing to ensure an effective seal at low pressure. The outward thrust of the rubber seal on the bearings as it reacts to increasing pressure prevents any extrusion damage in the sealing area.

The pair of polyacetal bearings are proportioned to support the piston and its side load.

FEATURES

- COMPACT DESIGN
- EASY ASSEMBLY
- LOW WEAR
- LONG LIFE

Piston seals

Hallite

77

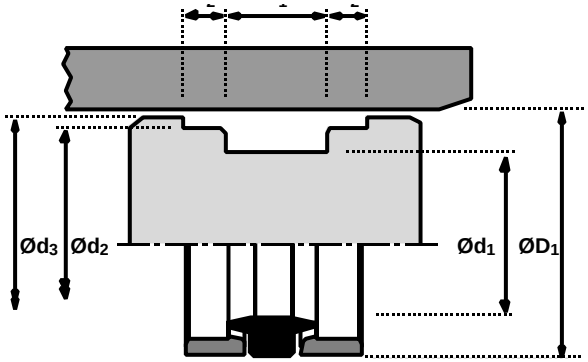

metric

ØD1	TOL H10	Ød1	TOL h9	Ød2	TOL h9	Ød3	TOL h11	L1 + 0.4 + 0.13	L2 0 - 0.13	PART No.
25	+0.08 +0.00	17.5	+0.00 -0.04	21.3	+0.000 -0.052	24.0	+0.00 -0.13	8.50	3.25	6111410
40	+0.10 +0.00	30	+0.00 -0.05	35.5	+0.000 -0.062	39.0	+0.00 -0.16	11.00	4.00	6111210
50	+0.10 +0.00	40	+0.00 -0.06	45.5	+0.000 -0.062	49.0	+0.00 -0.16	11.00	4.00	2326110
60	+0.10 +0.00	48	+0.00 -0.06	55.9	+0.000 -0.062	59.2	+0.00 -0.16	20.50	4.30	2326210
63	+0.12 +0.00	53	+0.00 -0.07	58.5	+0.000 -0.074	61.5	+0.00 -0.19	11.00	4.00	2325810
80	+0.12 +0.00	70	+0.00 -0.07	75.5	+0.000 -0.074	78.5	+0.00 -0.19	11.00	4.00	2325710
100	+0.14 +0.00	87	+0.00 -0.09	93.8	+0.000 -0.087	98.5	+0.00 -0.22	14.00	6.00	2326010
125	+0.16 +0.00	112	+0.00 -0.09	118.8	+0.000 -0.087	123.5	+0.00 -0.25	14.00	6.00	2325910

inch

ØD1	TOL H10	Ød1	TOL h9	Ød2	TOL h9	Ød3	TOL h11	L1 + 0.015 + 0.005	L2 0 - 0.005	PART No.
1.250	+0.004 +0.000	0.937	+0.000 -0.002	1.097	+0.000 -0.002	1.187	+0.000 -0.005	0.343	0.125	6567790
2.375	+0.005 +0.000	2.000	+0.000 -0.003	2.000	+0.000 -0.003	2.312	+0.00 -0.005	0.437	0.150	6918060
2.500	+0.005 +0.000	2.125	+0.000 -0.003	2.325	+0.000 -0.003	2.437	+0.000 -0.005	0.437	0.150	2360210
3.250	+0.005 +0.000	2.875	+0.000 -0.003	3.270	+0.000 -0.004	3.437	+0.000 -0.005	0.437	0.150	2360310

Rotary pressure seals

Hallite

80

TECHNICAL DETAILS

METRIC ○ — INCH ●

OPERATING CONDITIONS				
MAXIMUM SPEED	1.0 m/sec		3.0 ft/sec	
TEMPERATURE RANGE	-45°C + 110°C		-50°F + 230°F	
MAXIMUM PRESSURE	350 bar		5000 p.s.i.	
SURFACE ROUGHNESS	µmRa	µmRt	µinCLA	µinRMS
DYNAMIC SEALING FACE $Ød_1$	0.1 ↔ 0.4	4 max	4 ↔ 16	5 ↔ 18
STATIC SEALING FACE $ØD_1$	1.6 max	10 max	63 max	70 max
STATIC HOUSING FACES L_1	3.2 max	16 max	125 max	140 max
CHAMFERS & RADII				
GROOVE SECTION ≤ S mm	5.2			
MIN CHAMFER C mm	2.4			
MAX FILLET RAD r_1 mm	0.4			
TOLERANCES	$Ød_1$	$ØD_1$	L_1	
mm	f8	H10	+0.3	-0.0

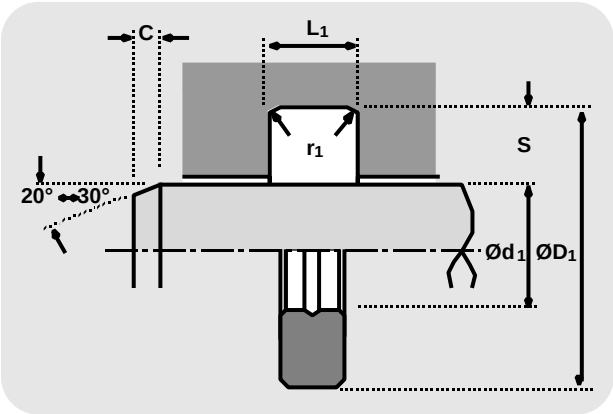

DESIGN

The Hallite 80 rotary pressure seal is a seal designed specifically for use in hydraulic swivel joints.

The Hallite 80 is manufactured in Hallite„s high specification polyurethane, Hythane 181, to provide ease of installation and excellent sealing characteristics.

Please call your local Hallite sales office for further details.

Rotary pressure seals

Hallite

80

metric

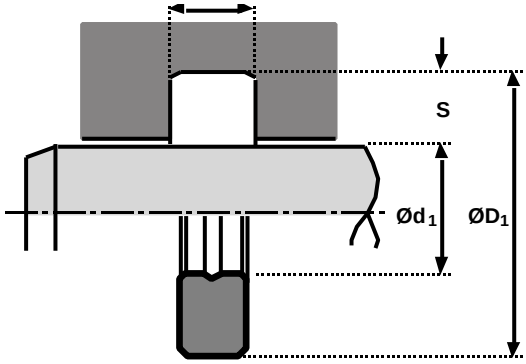

Ød1	TOL f8	ØD1	TOL H10	L1 +0.3 -0.0	PART No.
80.00	-0.036 -0.090	90.00	+0.14 -0.00	5.00	4563000
90.00	-0.036 -0.090	100.00	+0.14 -0.00	5.00	4563100

Ød1	TOL f8	ØD1	TOL H10	L1 +0.3 -0.0	PART No.
100.00	-0.036 -0.090	110.00	+0.14 -0.00	5.00	4563200
125.00	-0.043 -0.106	135.40	+0.16 -0.00	5.00	4578800

Piston Seal Double Acting

Hallite 83

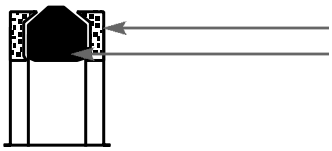

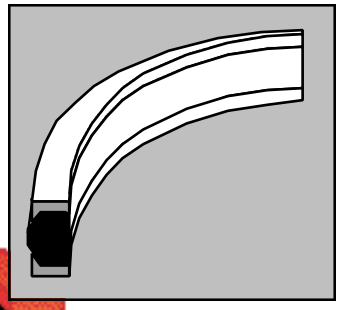

TRI SEAL®

FEATURES

- EFFICIENT SEALING
- LOW COST
- INTERCHANGEABLE WITH MOST COMPETITIVE DESIGNS
- ROBUST CONSTRUCTION
- LOW FRICTION
- SIMPLE MACHINING
- LONG LIFE
- EASY ASSEMBLY

INSTALLATION

Fast assembly of the seal is carried out as follows:
The intermediate seal is stretched over the piston into the recess.
The split anti-extrusion rings are positioned with the concave face against the seal.

MEDIA

Seals are suitable for mineral based hydraulic fluid, water soluble and water glycol fluids. The temperature for the standard range can be -40°C for intermittent use. Other materials are available which can extend the temperature range down to -60°C or up to +135 °C and to suit ester based or synthetic non-flammable fluids.

All our activities conform to the highest quality assurance systems. Hallite Seals International quality management systems are accredited to ISO 9001 and are approved by many of the world„s foremost OEM„s.

OPERATING CONDITIONS

MAXIMUM WORKING PRESSURE		
MAXIMUM SPEED	TEMPERATURE RANGE	TEMPERATURE RANGE
m/sec	—30°C + 80°C	—30°C + 100°C
0.5	250 bar /.3750 p.s.i	160 bar / 2400 p.s.i.
0.15	400 bar / 6000 p.s.i.	200 bar / 3000 p.s.i.

SURFACE ROUGHNESS				
		µmRa	µmRt	µin CLA
DYNAMIC SEALING FACE	$ØD_1$	0.1 to 0.4	4 max	4 to 16
STATIC SEALING FACE	$Ød_1$,$Ød_2$	1.6 max	10 max	63 max
STATIC HOUSING FACES	$Ød_3$, L_1, L_2	3.2 max	16 max	125 max

CHAMFERS & RADII in				
SEALSECTION	S	0.187	0.250	0.375
MIN CHAMFER	C	0.156	0.187	0.250
MAX FILLET RAD	r_1	0.010	0.016	0.016
MAX FILLET RAD	r_2	0.010	0.016	0.016

Design

The Hallite Tri-Seal assembly offers the engineer many advantages when considering the design of cast iron,bronze,alloy etc.one-piece pistons in double-acting hydraulic cylinders, not the least being cost effectiveness with long and efficient seal life.

The Tri-Seal consists of two split plastic anti-extrusion rings and a nitrile synthetic rubber sealing member.Under pressure, the seal exerts a wedging action on the anti-extrusion ring, reducing the clearance between the cylinder bore and the piston, thus minimising the possibility of extrusion of the seal.

Wear rings are also available for this assembly, allowing the designer to benefit from the following advantages :

- Eliminate metal to metal contact in the bore
- Improved alignment for optimum seal life
- One piece steel piston
- Smoother operation

Piston Seal Double Acting

Hallite 83

INCH

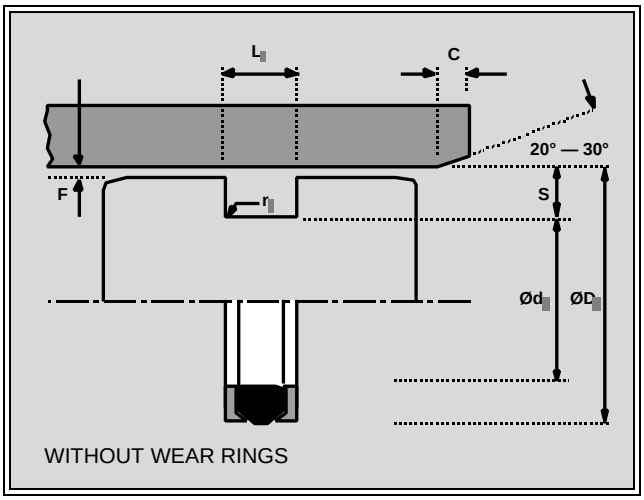

WITHOUT WEAR RINGS

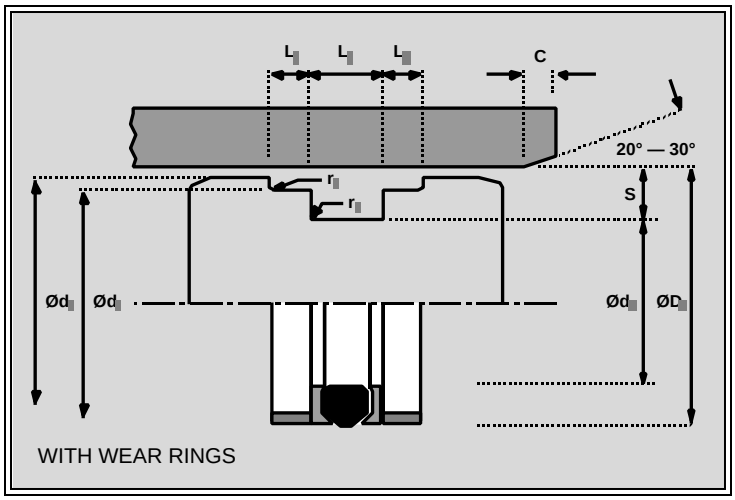

WITH WEAR RINGS

BORE DIA $ØD_1$	TOL	HOUSING DIA $Ød_1$	TOL	BEARING DIA $Ød_2$	TOL	PISTON DIA $Ød_3$	TOL	HOUSING LENGTH L_1 TOL ± 0.005	BEARING LENGTH L_2 TOL + 0.004 - 0	PART NUMBER
1.500	+0.005 -0.005	1.125	+0.005 -0.005	1.321	-0.001 -0.003	1.450	+0.005 -0.005	0.452	0.250	6111910*
2.000	+0.005 -0.005	1.500	+0.005 -0.005	1.821	-0.001 -0.003	1.950	+0.005 -0.005	0.587	0.250	2326310*
2.500	+0.005 -0.005	2.000	+0.005 -0.005	2.321	-0.001 -0.004	2.450	+0.005 -0.005	0.587	0.250	2122010*
3.000	+0.005 -0.005	2.500	+0.005 -0.005	2.774	-0.001 -0.004	2.940	+0.005 -0.005	0.587	0.250	2122110*
3.250	+0.005 -0.005	2.750	+0.005 -0.005	3.023	-0.001 -0.004	3.190	+0.005 -0.005	0.587	0.250	2327610*
3.500	+0.005 -0.005	3.000	+0.005 -0.005	3.274	-0.001 -0.005	3.440	+0.005 -0.005	0.587	0.250	2122210*
4.000	+0.005 -0.005	3.250	+0.005 -0.005	3.773	-0.001 -0.005	3.940	+0.005 -0.005	0.780	0.250	2326410*
5.000	+0.005 -0.005	4.250	+0.005 -0.005	4.713	-0.001 -0.005	4.910	+0.005 -0.005	0.780	0.375	2326510*
6.000	+0.005 -0.005	5.250	+0.005 -0.005	5.713	-0.001 -0.005	5.910	+0.005 -0.005	0.780	0.375	2326610*

*** When ordering Type 83 with wear rings please replace the last digit of the part number with 9.**
eg : Type 83 2.500 x 2.000, without wear rings part number 2122010, with wear rings 2122019

Note : For availability of sizes not listed please consult your local Hallite sales department.

EXTRUSION GAP

Please note that the figures shown for the extrusion gap **F** relate to the maximum permissible, worst case situation with the gap all on one side.

Note also that extrusion is closely linked to pressure and temperature and that in general, the smaller the gap the better the seal performs.

MAXIMUM EXTRUSION GAP F				
PRESSURE	p.s.i.	2400	3750	6000
MAXIMUM GAP	in	0.024	0.020	0.016

Bearings

Hallite

87

TECHNICAL DETAILS

METRIC ○ — INCH ●

OPERATING CONDITIONS

	METRIC	INCH
MAXIMUM SPEED	5.0 m/sec	15.0 ft/sec
MAXIMUM TEMPERATURE	-50°C + 200°C	-58°F + 390°F

TYPICAL PHYSICAL PROPERTIES

SPECIFIC GRAVITY		3.1		3.1
COMPRESSION STRESS AT YIELD	23°C	20 MN/m²	73°F	2900 p.s.i.
COMPRESSION STRESS AT YIELD	80°C	9 MN/m²	176°F	1300 p.s.i.
COEFFICIENT OF THERMAL CONDUCTIVITY		2.5 W/mK		1.4Btu/hft°F
COEFFICIENT OF THERMAL EXPANSION	LENGTH & THICKNESS 6.5×10^{-5} per °C			
COEFFICIENT OF DYNAMIC FRICTION	Dry	Lubricated		
	0.25	0.05		

BEARING STRIP TOLERANCES

L_1	S
-0.1 -0.5	+0.03 -0.05

SURFACE ROUGHNESS

	µmRa	µmRt	µinCLA	µinRMS
DYNAMIC SEALING FACE $Ød_1$ $ØD_1$	0.4	4 max	16	18
STATIC HOUSING FACES $ØD_1$ L_1 $ØD_2$	3.2 max	16 max	125 max	140 max

HOUSING DETAILS & TOLERANCES

G min controls the minimum metal to metal clearance between the gland and rod or bore and piston.
G max controls the maximum extrusion gap seen by a seal associated with the bearing.

Typically, G min should be 0.028" / 0.7mm but can be reduced when required by the extrusion gap for the seal and the build up of tolerances. The absolute minimum metal to metal clearance recommended is 0.004" / 0.1mm
For applications not using a seal G max - see overleaf.

ROD	$Ød_1$	f9
	$ØD_2=Ød_1+2S$	up to: Ø80 H10 above: Ø80 H9
	$ØD_3=Ød_1+G$	G min / max
	L_1	-0 + 0.2
PISTON	$ØD_1$	H11
	$Ød_2=ØD_1-2S$	f9
	$Ød_3=ØD_1+G$	G min / max
	L_1	-0 + 0.2

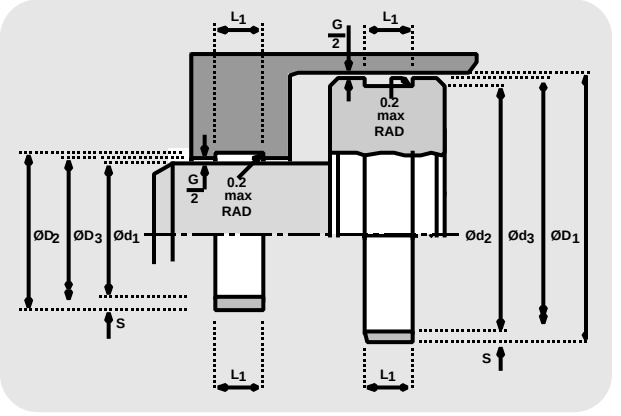

FEATURES

- LOW FRICTION
- INFINITE LENGTH RANGE
- EASY INSTALLATION
- EXTREMELY FLEXIBLE

Please send us details of your application for advice on this or any other problem where the Hallite 87 may solve your bearing problem.

DESIGN

Hallite 87 bearing strip has the ability to support side loads and eliminate ‚stick slip„ between moving parts. The accurately dimensioned rectangular cross section is produced from a special combination of PTFE and Bronze materials. It has excellent heat resistance and strength to resist creep, making it suitable for bearings with reciprocating, oscillating or rotary movement, whether lubricated or not. Our standard range of cross section sizes are proportioned to be wrapped around a wide range of rod or piston diameters. Installation of the bearing is an easy task. Calculate and measure length L_2 (see overleaf), cut the strip with a sharp blade and fit to the groove. If required we will be pleased to supply bearings to your sizes. Independent testing has established the typical properties which make the Hallite 87 worthwhile considering for many applications other than hydraulic or pneumatic cylinders. When using the compressive stress at yield in your calculation it is suggested a 4:1 factor of safety is applied.

The material is compatible with hydraulic mineral oil, lubricating oil, water based and synthetic fire resistant fluids and lubricating grease. Although the material is rated at 200°C, the recommended maximum temperature for bearing applications is 60°C.

Bearings

Hallite 87

metric

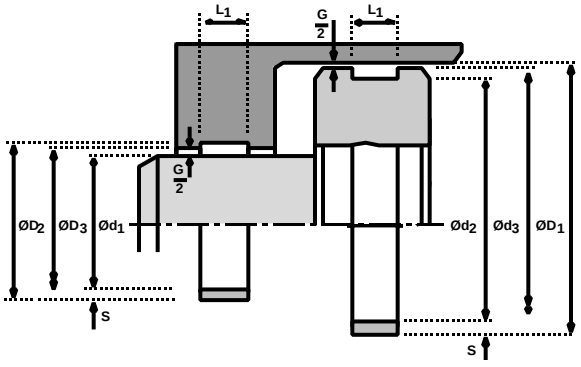

Ø RANGE $Ød_1$	$ØD_1$	L_1	S	G MAX	G MIN	W	PART NUMBER
8 - 20	10 - 25	2.5	1.55	AS REQUIRED BY THE SEAL EXTRUSION GAP (see note below)	0.6	1.5 - 1.0	6663000
8 - 20	10 - 25	4.0	1.55		0.6	1.5 - 1.0	6663100
20 - 75	25 - 80	5.6	2.50		0.7	1.5 - 1.0	6663200
35 - 300	40 - 320	9.7	2.50		0.7	3.5 - 1.5	6658800
35 - 300	40 - 320	10.0	2.00		0.7	6.0 - 2.0	6663300
120 - 900	125 - 900	15.0	2.50		0.8	6.0 - 2.0	6658900
120 - 900	125 - 900	15.0	2.00		0.8	8.0 - 4.0	6663400
200 - 900	200 - 900	20.0	2.00		0.8	8.0 - 4.0	6663500
200 - 900	200 - 900	20.0	2.50		1.0	8.0 - 4.5	6663600
300 - 900	300 - 900	25.0	2.50		1.0	8.0 - 6.0	6663700

For applications not using a seal G Max can be :

S	G Max
1.55	1.0
2.00	1.1
2.50	1.6

Cutting strip to length

Calculate the developed length of the strip, L_2 (the developed length is the circumferential length of the centre line of the strip when installed).

For piston mounting :

THE DEVELOPED LENGTH = π x (CYLINDER BORE DIAMETER - STRIP SECTION) - REQUIRED SPLIT

i.e. $L_2 = \pi \times (ØD_1 - S) - W$

For gland mounting :

THE DEVELOPED LENGTH = π x (ROD DIAMETER + STRIP SECTION) - REQUIRED SPILT

i.e. $L_2 = \pi \times (Ød_1 + S) - W$

Cut to length, (L_2), using a sharp knife.

Bearing strip cutting angle

Hallite Standard

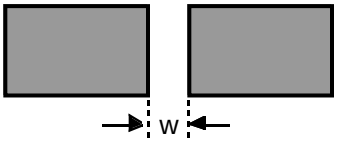

Alternative

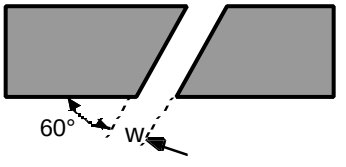

Hallite

506

TECHNICAL DETAILS

	METRIC		INCH	
OPERATING CONDITIONS				
TEMPERATURE RANGE	-40°C + 120°C		-40°F + 250°F	
LIMITING PV VALUES LUBRICATED*	Speed m/sec	Pressure MN/m²	Speed ft/sec	Pressure p.s.i.
	0.1	10.0	0.3	1500
	1.0	6.0	3.0	900
	5.0	0.8	16.0	120
TYPICAL PHYSICAL PROPERTIES				
SPECIFIC GRAVITY		1.27		1.27
COMPRESSION STRESS AT FAILURE	(Temp 23°C)	450 MN/m²	(Temp 73°F)	65,000 p.s.i.
COMPRESSION STRESS AT YIELD*	(Temp 23°C)	115 MN/m²	(Temp 73°F)	16,500 p.s.i.
COMPRESSION STRESS AT YIELD*	(Temp 80°C)	58 MN/m²	(Temp 176°F)	8,500 p.s.i.
COEFFICIENT OF THERMAL CONDUCTIVITY		0.27 W/mK		0.16 Btu/hft °F
COEFFICIENT OF THERMAL EXPANSION	Length	Thickness	Length	Thickness
	9×10^{-5} per °C	13×10^{-5} per °C	5×10^{-5} per °F	7.3×10^{-5} per °F
COEFFICIENT OF DYNAMIC FRICTION on steel surface (0.2 µm R a) / (8 µin CLA)	Dry	Lubricated	Dry	Lubricated
	0.50	0.06	0.50	0.06
SURFACE ROUGHNESS				
	µm Ra	µm Rt	µm CL A	µm RMS
DYNAMIC SEALING FACE $Ød_1$	0.4	4 max	16	18
STATIC SEALING FACE $ØD_1$ L_1	3.2 max	16 max	125 max	140 max
BEARING STRIP TOLERANCES				
	L_1	S	L_1	S
	-0.1 to -0.6	-0.02 to -0.1	-0.005 to -0.015	-0.001 to -0.004
WIDTH OF BEARING SPLIT - W				
	$Ød_1$ / $ØD_1$	W	$Ød_1$ / $ØD_1$	W
	Up to 50	3.00 - 1.50	Up to 2"	0.12 - 0.06
	Up to 120	5.00 - 3.50	Up to 5"	0.19 - 0.14
	Up to 250	9.00 - 7.25	Up to 10"	0.35 - 0.29
	Up to 550	17.00 - 15.00	Up to 22"	0.67 - 0.59
HOUSING DETAILS & TOLERANCES				
ROD: G min controls the minimum metal to metal clearance between the gland and rod or bore and piston. G max controls the maximum extrusion gap seen by a seal associated with the bearing. Typically, G min should be 0.7mm / 0.028" but can be reduced when required by the extrusion gap for the seal and the build up of tolerances. The absolute minimum metal to metal clearance recommended is 0.1mm / 0.004". For applications not using a seal G max can be 0.6 x S	$Ød_1$	f9	$Ød_1$	f9
	$ØD_2 = Ød_1 + 2S$	up to : Ø80 H10	$ØD_2 = Ød_1 + 2S$	up to : Ø3" H10
		above : Ø80 H9		above : Ø3" H9
	$ØD_3 = Ød_1 + G$	G min / max	$ØD_3 = Ød_1 + G$	G min / max
	L_1	+ 0.2 -0 mm		+ 0.008 -0 mm
PISTON	$ØD_1$	H11	$ØD_1$	H11
	$Ød_2 = ØD_1 - 2S$	f9	$Ød_2 = ØD_1 - 2S$	f9
	$Ød_3 = ØD_1 + G$	G min / max	$Ød_3 = ØD_1 + G$	G min / max
	L_1	+ 0.2 -0 mm	L_1	+ 0.008 -0 mm

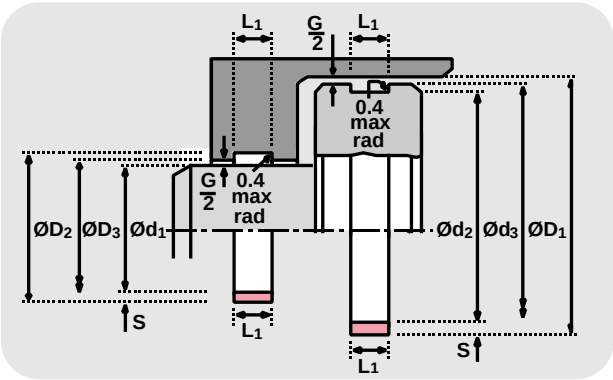

* Please note that for reciprocating applications, the compressive stress at yield should be used for design calculations. For rotary shafts use the limiting P.V. values. It is suggested that a 2:1 factor of safety is applied.

DESIGN

Hallite 506 bearing strip is available in three forms: cut rings, spiral lengths and flat coils. Hallite 506 provides an extremely effective, hard wearing and easy to use bearing material.

Manufactured to very tight tolerances and providing bearing solutions for reciprocating, oscillating and slow rotary movement applications, Hallite 506 bearing strip is used in many of today„s most arduous hydraulic applications around the world.

Commonly fitted in reciprocating cylinders as rod and piston bearings, Hallite 506 is capable of withstanding extreme side-loads preventing metal to metal contact. The material„s design incorporates micro indentations on the bearing strip„s surface to trap fluid and provide built-in lubrication to the bearing.

The 506 bearing strip is manufactured by a patented process, using a woven fabric reinforced polyester resin material and is proven to be compatible with a wide range of fluids, including mineral oils, water based fluids and phosphate esters, to produce a rectangular section strip which is available in a wide range of inch and metric sizes including cross sections specified in ISO 10766.

Hallite

506

Hallite 506 bearing strip is available in three forms:

CUT RINGS

Ready made bearings, cut to size and to customer specifications, and ready for installation, Hallite 506 bearings have become an industry standard favoured by designers and specifiers alike. Generally produced for the medium to high volume user.

SPIRAL LENGTHS

Available in a wide range of preformed diameters, spirals are supplied in continuous lengths to suit a range of inside and outside diameters. Ideal for lower volume users requiring various diameters.

FLAT COILS

Packaged in a dispenser for ease of storage and handling, flat coils are supplied in 10 metre lengths suitable for a wide range of diameters and are ideal for those using or supplying one off bearings for small volume requirements.

The ranges shown on the following pages are Hallite„s most popular sizes. The section ranges identify section and groove width; from these nearly any diameter of cut ring or spiral length can be manufactured. If you cannot find the size you are looking for, please contact your local Hallite sales office for additional size information.

All standard bearing strip is printed with a size reference and includes distance marking every 100mm on metric size sections and every six inches on inch size sections for guidance only.

When ordering please clearly state whether cut rings, spiral lengths or flat coils are required. For cut rings and spiral lengths please state whether rod or piston application and provide inside (±d) or outside (±D) diameters, groove width (L_1) and section (S) dimensions and where spiral lengths are ordered also specify length required. For flat coils please specify groove width (L_1) and section (S) dimensions.

FEATURES

- HIGH LOAD CAPABILITY
- INFINITE LENGTH RANGE
- VIRTUALLY ZERO SWELL
- SELF LUBRICATING
- LOW FRICTION
- CUT TO LENGTH
- VERY LARGE RANGE OF SIZES

Cutting bearing strip to size

1. Select the groove width (L_1) and section (S) required.
2. In the case of a rod bearing, position the bearing strip around the rod or in the case of a piston bearing, place it in the piston groove and mark the point of overlap. Determine the correct width of bearing split (W) for the Ød or ØD being used, as indicated in the technical details, and make a second mark.
3. Remove the strip and cut at the second marked position to the desired angle using secateurs or other similar cutting tool.
   It is recommended that the standard cutting angle is used for the majority of applications.

Bearing split cutting angle

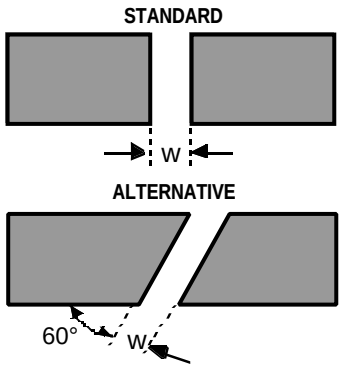

Hallite 506

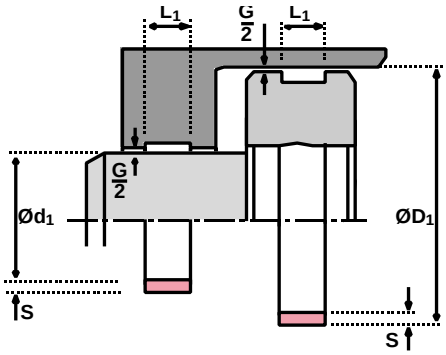

metric - section range

S	L_1	
1.50	5.6	
2.00	9.7	
2.00	10.0	
2.00	15.0	
2.50	5.6	‡
2.50	8.0	
2.50	9.7	‡
2.50	13.0	
2.50	15.0	‡
2.52	19.5	

S	L_1	
2.50	20.0	
2.50	25.0	‡
2.52	30.0	
2.77	15.0	**
2.77	20.0	**
2.77	25.0	**
3.00	9.7	
3.00	12.8	
3.00	20.0	
3.02	15.0	

S	L_1	
3.20	9.7	
3.20	19.7	
3.50	25.0	
4.00	6.1	
4.00	9.7	
4.00	20.0	
4.00	25.0	‡
4.00	30.0	
4.00	40.1	

inch - section range

S	L_1
0.062	0.375
0.125	0.375
0.125	0.500
0.125	0.625
0.125	0.750
0.125	1.000
0.125	1.500

** Denotes non standard product.
Within the size range, items suffixed ‡ indicate cross sections to ISO 10766.

metric - spiral lengths

Ø RANGE $Ød_1$	Ø RANGE $ØD_1$	S	L_1	G MAX	G MIN*	PART No.
25 - 41	45 - 90	2.0	10.0	AS REQUIRED BY THE SEAL EXTRUSION GAP For applications not using a seal G MAX can be 1.6mm.	0.7	8501310
35 - 70	74 - 160	2.0	10.0		0.7	8502610
70 - 155	159 - 310	2.0	10.0		0.7	8502252
35 - 50	54 - 110	2.0	15.0		0.7	8503357
50 -100	104 - 210	2.0	15.0		0.7	8503175
90 - 180	184 - 370	2.0	15.0		0.7	8503358
25 - 30	35 - 70	2.5	5.6		0.7	8502000‡
25 - 50	55 - 110	2.5	5.6		0.7	8502020‡
50 - 100	105 - 210	2.5	5.6		0.7	8502040‡
25 - 40	45 - 90	2.5	9.7		0.7	8502100‡
35 - 70	75 - 150	2.5	9.7		0.7	8502120‡
70 - 150	155 - 310	2.5	9.7		0.7	8502140‡
40 - 50	55 - 110	2.5	13.0		0.7	8502200
50 - 100	105 - 210	2.5	13.0		0.7	8502220
90 - 180	185 - 370	2.5	13.0		0.8	8502230
40 - 50	55 - 110	2.5	15.0		0.7	8502300‡
50 - 100	105 - 210	2.5	15.0		0.7	8502330‡
90 - 180	185 - 370	2.5	15.0		0.8	8502350‡
50 - 80	85 - 170	2.5	20.0		0.7	8502400
75 - 150	155 - 310	2.5	20.0		0.8	8502410
125 - 250	255 - 510	2.5	20.0		0.8	8502430
60 - 80	85 - 170	2.5	25.0		0.7	8502500‡
70 - 150	155 - 310	2.5	25.0		0.8	8502520‡
125 - 250	255 - 510	2.5	25.0		0.8	8502530‡
40 - 50	56 - 100	3.0	9.7		0.8	8503369
50 - 100	106 - 210	3.0	9.7		0.8	8503370
100 - 150	156 - 310	3.0	9.7		0.8	8503371

Bearings

Hallite 506

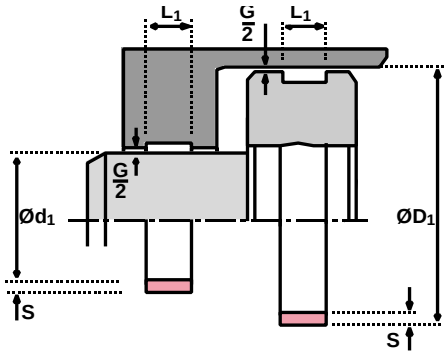

metric - spiral lengths

Ø RANGE Ød1	ØD1	S	L1	G MAX	G MIN*	PART No.
50 - 60	66 - 120	3.0	12.8	AS REQUIRED BY THE SEAL EXTRUSION GAP For applications not using a seal G MAX can be 1.6mm.	0.7	8503037
60 - 104	110 - 220	3.0	12.8		0.8	8503038
90 - 149	155 - 300	3.0	12.8		0.8	8503039
55 - 80	86 - 170	3.0	20.0		0.8	8503124
80 - 150	156 - 310	3.0	20.0		0.8	8502635
140 - 250	256 - 510	3.0	20.0		0.8	8503189
50 - 75	81 - 160	3.02	15.0		0.7	8502734
60 - 80	68 - 170	4.0	6.1		0.8	8503359
80 - 150	158 - 310	4.0	6.1		0.8	8503360
150 - 250	258 - 510	4.0	6.1		0.8	8503361
60 - 80	88 - 170	4.0	9.7		0.8	8503362
80 - 150	158 - 310	4.0	9.7		0.8	8503363
150 - 250	258 - 510	4.0	9.7		0.8	8503364
60 - 80	88 - 170	4.0	20.0		0.8	8503365
80 - 150	158 - 310	4.0	20.0		0.8	8503366
150 - 250	258 - 510	4.0	20.0		0.8	8503191
120 -150	158 - 310	4.0	25.0		0.8	8503367‡
150 - 250	258 - 510	4.0	25.0		0.8	8503192‡
120 -150	158 - 310	4.0	30.0		0.8	8503368
150 - 250	258 - 510	4.0	30.0		0.8	8503193
170 - 200	208 - 410	4.0	40.0		0.8	8503179
200 - 300	308 - 610	4.0	40.0		0.8	8503180

Within the size range, items suffixed ‡ indicate cross sections to ISO 10766.

inch - spiral lengths

Ø RANGE Ød1	ØD1	S	L1	G MAX	G MIN*	PART No.
1.000 - 1.375	2.625 - 3.500	0.125	0.375	AS REQUIRED BY THE SEAL EXTRUSION GAP For applications not using a seal G MAX can be 0.080in.	0.031	8502098
1.250 - 1.875	2.125 - 4.250	0.125	0.375		0.031	8502099
1.250 - 1.750	2.000 - 4.000	0.125	0.500		0.031	8502089
1.750 - 3.500	3.750 - 6.250	0.125	0.500		0.031	8502090
3.500 - 6.000	6.250 - 10.000	0.125	0.500		0.031	8502091
8.000 - 12.500	12.750 - 25.000	0.125	0.500		0.031	8502720
2.000 - 3.500	3.750 - 6.250	0.125	0.625		0.031	8502092
3.500 - 6.000	6.250 - 10.000	0.125	0.625		0.031	8502093
2.000 - 3.500	3.750 - 6.250	0.125	0.375		0.031	8502183
2.000 - 3.500	3.750 - 6.250	0.125	0.750		0.031	8502094
3.500 - 6.000	6.250 - 10.000	0.125	0.750		0.031	8502095
2.500 - 3.500	3.750 - 6.250	0.125	1.000		0.031	8502096
3.500 - 6.000	6.250 - 10.000	0.125	1.000		0.031	8502097
8.000 - 12.500	12.750 - 25.000	0.125	1.000		0.031	8502222

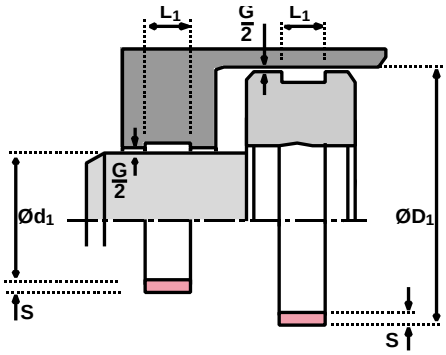

Bearings

Hallite 506

metric - flat coils

Ø RANGE ID	OD	S	L_1	G MAX	G MIN*	PART No.
140	210	2.0	15.0	AS REQUIRED BY THE SEAL EXTRUSION GAP For applications not using a seal G MAX can be 1.6mm / 0.080in.	0.7	8581210
140	230	2.5	5.6		0.7	8580010‡
140	230	2.5	9.7		0.7	8580110‡
140	230	2.5	13.0		0.7	8581110
140	230	2.5	15.0		0.7	8580210‡
140	230	2.5	20.0		0.8	8580310
140	230	2.5	25.0		0.8	8580410‡
140	240	3.0	9.7		0.7	8581410
140	240	3.0	12.8		0.7	8581010
140	240	3.0	20.0		0.7	8581510
						inch - flat coils
5.500	9.750	0.125	0.375		0.031	8580510
5.500	9.750	0.125	0.500		0.031	8580610
5.500	9.750	0.125	0.625		0.031	8580710
5.500	9.750	0.125	0.750		0.031	8580810
5.500	9.750	0.125	1.000		0.031	8580910

Within the size range, items suffixed ‡ indicate cross sections to ISO 10766.
ID and OD are indicated as approximate values for guidance only.

* This value can be reduced if required by the seal's maximum extrusion gap - see housing design page 16.

If necessary coil diameters can be re-sized by curing on a suitable mandrel in an oven for 1 hr at 120°C / 250°F and allowing to cool on the mandrel.

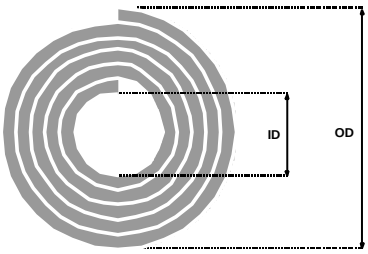

Notes

Rod/Piston seals

Hallite

511

TECHNICAL DETAILS

METRIC ○ — INCH ●

OPERATING CONDITIONS

	METRIC	INCH
MAXIMUM SPEED	0.5 m/sec	1.5 ft/sec
TEMPERATURE RANGE	-40°C + 110°C	-40°F + 230°F
MAXIMUM PRESSURE	350 bar	5000 p.s.i.

MAXIMUM EXTRUSION GAP

Figures show the maximum permissible gap all on one side ,for rod seals using minimum rod Ø and maximum clearance Ø and for piston seals using the minimum clearance Ø and maximum bore Ø

(1/4" section and above)

PRESSURE bar	160	250	350
PRESSURE p.s.i.	2400	3750	5000
MAXIMUM GAP in	0.024	0.020	0.016

SURFACE ROUGHNESS

	µmRa	µmRt	µinCLA	µinRMS
DYNAMIC SEALING FACE - ROD $Ød_1$	0.1 ↔ 0.4	4 max	4 ↔ 16	5 ↔ 18
STATIC SEALING FACE - ROD $ØD_1$	1.6 max	10 max	63 max	70 max
DYNAMIC SEALING FACE - PISTON $ØD_1$	0.1 ↔ 0.4	4 max	4 ↔ 16	5 ↔ 18
STATIC SEALING FACE - PISTON $Ød_1$	1.6 max	10 max	63 max	70 max
STATIC HOUSING FACES L_1	3.2 max	16 max	125 max	140 max

CHAMFERS & RADII

GROOVE SECTION ≤ S in	0.125	0.187	0.250	0.312	0.375	0.500	0.625
MIN CHAMFER C in	0.093	0.093	0.125	0.156	0.187	0.187	0.217
MAX FILLET RAD r_1 in	0.008	0.008	0.016	0.032	0.032	0.032	0.047
MAX FILLET RAD r_2 in	0.016	0.016	0.032	0.047	0.047	0.047	0.062

TOLERANCES

Please refer to specified tolerances in the introduction - Housing & installation data - Hallite 500 Series

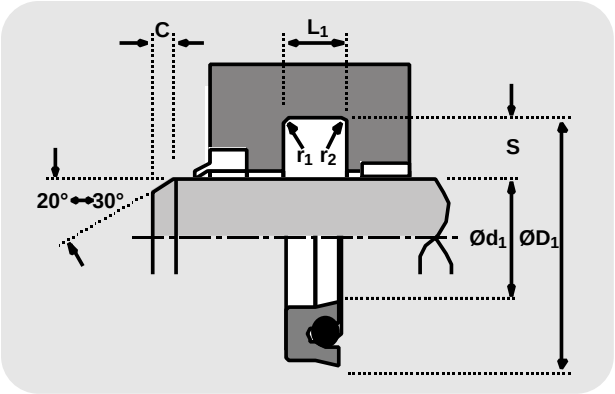

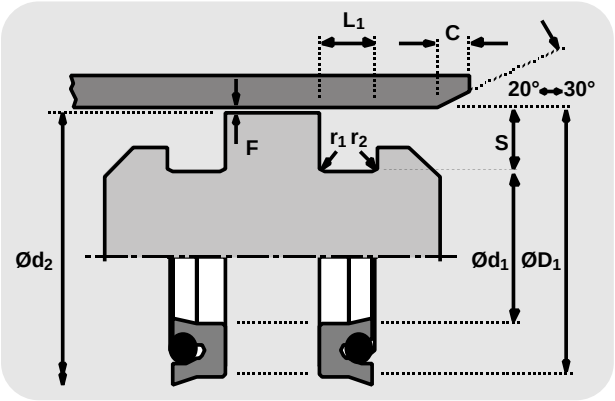

Technical details shown are for standard material option.

DESIGN

The Hallite 511 is a standard profile loaded U cup utilising a polyurethane or polyester shell energised by a high specification resilient O ring.

At zero or low pressure, the O ring helps to increase the sealing force preventing any bypass. As pressure rises the sealing force increases and the O ring ensures complete lip actuation under most conditions.

The symmetry of the seal allows it to be used on both rod and piston applications and its flexibility enables easy installation. Ideally suited for single acting applications, the Hallite 511 can also be fitted back to back for use in double acting applications. Although used as a rod seal, other profiles such as 513, 605 or 621 are a better option.

FEATURES

- FLEXIBLE FOR EASY INSTALLATION
- EXCELLENT RESISTANCE TO ABRASION
- POSITIVE LIP ACTUATION
- KNIFE TRIMMED PRECISION SEALING LIPS
- COMPACT HOUSING
- WIDE RANGE OF SIZES
- MATERIAL OPTIONS

MATERIALS

Seal material - O-Ring	last digit of part number
Standard material:	
Polyurethane - NBR	_ _ _ _ _ **10**
Material options:	
Polyester - NBR	_ _ _ _ _ **11**
Polyester - FKM	_ _ _ _ _ **12**

Rod/Piston seals

Hallite 511

inch

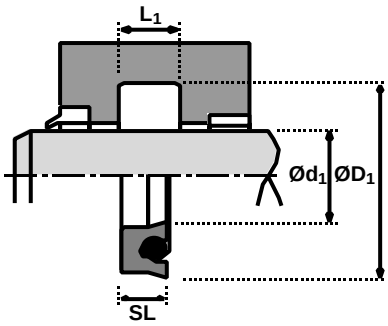

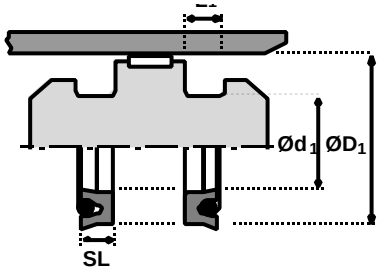

Ød1	ØD1	SL	L1	STD. REF.	PART No.
1/8 CROSS SECTION					
0.13	0.38	0.13	0.138	2500125	8900810
0.19	0.44	0.13	0.138	12500187	8800110
0.25	0.50	0.13	0.138	12500250	8800210
0.25	0.25	0.13	0.138	12500312	8902810
0.38	0.63	0.13	0.138	12500375	8800410
0.50	0.75	0.13	0.138	12500500	8800610
0.81	0.81	0.13	0.138	12500562	8844610
0.63	0.88	0.13	0.138	12500625	8800810
0.69	0.94	0.13	0.138	12500687	8801010
0.75	1.00	0.13	0.138	12500750	8801110
0.81	1.06	0.13	0.138	12500812	8815310
0.88	1.13	0.13	0.138	12500875	8801410
0.94	1.19	0.13	0.138	12500937	8844810
1.00	1.25	0.13	0.138	12501000	8801610
1.06	1.31	0.13	0.138	12501062	8801810
1.13	1.38	0.13	0.138	12501125	8801910
1.25	1.50	0.13	0.138	12501250	8802210
1.38	1.63	0.13	0.138	12501375	8802410
1.50	1.75	0.13	0.138	12501500	8802610
1.63	1.88	0.13	0.138	12501625	8802810
1.75	2.00	0.13	0.138	12501750	8803010
1.88	2.13	0.13	0.138	12501875	8803210
2.00	2.25	0.13	0.138	12502000	8803410
2.25	2.50	0.13	0.138	12502250	8803810
2.38	2.63	0.13	0.138	12502375	8815610
2.50	2.75	0.13	0.138	12502500	8800310
2.75	3.00	0.13	0.138	12502750	8817910
2.88	3.13	0.13	0.138	12502875	8814210
3.00	3.25	0.13	0.138	12503000	8804510
3.25	3.50	0.13	0.138	12503250	8819610
3.50	3.75	0.13	0.138	12503500	8815810
3.75	4.00	0.13	0.138	12503750	8818710
3.88	4.13	0.13	0.138	12503875	8816510
4.00	4.25	0.13	0.138	12504000	8805210
4.25	4.50	0.13	0.138	12504250	8819710
4.75	5.00	0.13	0.138	12504750	8818110
4.88	5.13	0.13	0.138	12504875	8816710
5	**5/32 CROSS SECTION**				
1.00	1.31	0.16	0.172	15601000	8810110
1.19	1.50	0.16	0.172	15601187	8811010
1.25	1.56	0.16	0.172	15601250	8813810
1.38	1.69	0.16	0.172	15601375	8813910
3/16 CROSS SECTION					
0.38	0.88	0.19	0.207	18700375	8902910
0.50	0.88	0.19	0.207	18700500	8800710
0.63	1.00	0.19	0.207	18700625	8800910
0.75	1.13	0.19	0.207	18700750	8801210
0.88	1.25	0.19	0.207	18700875	8801510
1.00	1.38	0.19	0.207	18701000	8801710
1.13	1.50	0.19	0.207	18701125	8802010
1.19	1.56	0.19	0.207	18701187	8851710
1.25	1.63	0.19	0.207	18701250	8802310
1.38	1.75	0.19	0.207	18701375	8802510
1.50	1.88	0.19	0.207	18701500	8802710
1.63	2.00	0.19	0.207	18701625	8802910
1.75	2.13	0.19	0.207	18701750	8803110
1.88	2.25	0.19	0.207	18701875	8803310
2.00	2.38	0.19	0.207	18702000	8803510
2.13	2.50	0.19	0.207	18702125	8803710
2.25	2.63	0.19	0.207	18702250	8803910
2.38	2.75	0.19	0.207	18702375	8804010
2.50	2.88	0.19	0.207	18702500	8804110
2.63	3.00	0.19	0.207	18702625	8804210
2.75	3.13	0.19	0.207	18702750	8804410
2.88	3.25	0.19	0.207	18702875	8851010
3.00	3.38	0.19	0.207	18703000	8804610
3.13	3.50	0.19	0.207	18703125	8804710
3.25	3.63	0.19	0.207	18703250	8804810
3.38	3.75	0.19	0.207	18703375	8854210
3.50	3.88	0.19	0.207	18703500	8805010
3.63	4.00	0.19	0.207	18703625	8805110
3.75	4.13	0.19	0.207	18703750	8879410
3.88	4.25	0.19	0.207	18703875	8823510
4.00	4.38	0.19	0.207	18704000	8805310
4.13	4.50	0.19	0.207	18704125	8805410
4.25	4.63	0.19	0.207	18704250	8805510
4.38	4.75	0.19	0.207	18704375	8854310
4.50	4.88	0.19	0.207	18704500	8805710
4.63	5.00	0.19	0.207	18704625	8879510
4.88	5.25	0.19	0.207	18704875	8823610
1/4 CROSS SECTION					

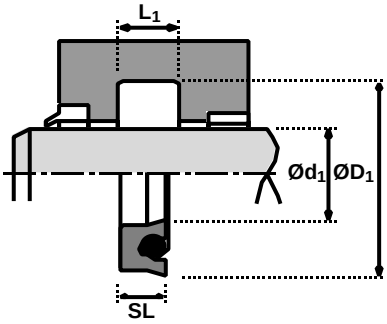

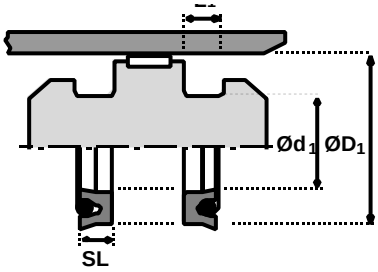

Rod/Piston seals

Hallite 511

inch

Ød1	ØD1	SL	L1	STD. REF.	PART No.
0.38	0.88	0.25	0.275	25000375	8865810
0.50	1.00	0.25	0.275	25000500	8806310
0.63	1.13	0.25	0.275	25000625	8806410
0.75	1.25	0.25	0.275	25000750	8806510
0.88	1.38	0.25	0.275	25000875	8806610
1.00	1.50	0.25	0.275	25001000	8806810
1.13	1.63	0.25	0.275	25001125	8807010
1.25	1.75	0.25	0.275	25001250	8807210
1.38	1.88	0.25	0.275	25001375	8807310
1.50	2.00	0.25	0.275	25001500	8807510
1.63	2.13	0.25	0.275	25001625	8807710
1.75	2.25	0.25	0.275	25001750	8807810
1.88	2.38	0.25	0.275	25001875	8808010
2.00	2.50	0.25	0.275	25002000	8808210
2.13	2.63	0.25	0.275	25002125	8808410
2.25	2.75	0.25	0.275	25002250	8808610
2.38	2.88	0.25	0.275	25002375	8808810
2.50	3.00	0.25	0.275	25002500	8809010
2.63	3.13	0.25	0.275	25002625	8809110
2.75	3.25	0.25	0.275	25002750	8809210
2.88	3.38	0.25	0.275	25002875	8809410
3.00	3.50	0.25	0.275	25003000	8809610
3.25	3.75	0.25	0.275	25003250	8810010
3.38	3.88	0.25	0.275	25003375	8850710
3.50	4.00	0.25	0.275	25003500	8810310
3.63	4.13	0.25	0.275	25003625	8810510
3.75	4.25	0.25	0.275	25003750	8810610
3.88	4.38	0.25	0.275	25003875	8810710
4.00	4.50	0.25	0.275	25004000	8810810
4.25	4.75	0.25	0.275	25004250	8811210
4.38	4.88	0.25	0.275	25004375	8811410
4.50	5.00	0.25	0.275	25004500	8811610
4.63	5.13	0.25	0.275	25004625	8811810
4.75	5.25	0.25	0.275	25004750	8811910
4.88	5.38	0.25	0.275	25004875	8856510
5.00	5.50	0.25	0.275	25005000	8812010
5.25	5.75	0.25	0.275	25005250	8812210
5.50	6.00	0.25	0.275	25005500	8812410
5.75	6.25	0.25	0.275	25005750	8812610
6.00	6.50	0.25	0.275	25006000	8812810
6.25	6.75	0.25	0.275	25006250	8856610
6.50	7.00	0.25	0.275	25006500	8813110
6.75	7.25	0.25	0.275	25006750	8813210

Ød1	ØD1	SL	L1	STD. REF.	PART No.
7.00	7.50	0.25	0.275	25007000	8813310
7.25	7.75	0.25	0.275	25007250	8856710
7.50	8.00	0.25	0.275	25007500	8813410
8.00	8.50	0.25	0.275	25008000	8813610
8.25	8.75	0.25	0.275	25008250	8856810
8.50	9.00	0.25	0.275	25008500	8813710

5/16 CROSS SECTION

0.38	1.00	0.31	0.344	31200375	8824910
1.00	1.63	0.31	0.344	31201000	8806910
1.13	1.75	0.31	0.344	31201125	8807110
1.25	1.88	0.31	0.344	31201250	8870010
1.38	2.00	0.31	0.344	31201375	8807410
1.50	2.13	0.31	0.344	31201500	8807610
1.63	2.25	0.31	0.344	31201625	8850910
1.75	2.38	0.31	0.344	31201750	8807910
1.88	2.50	0.31	0.344	31201875	8808110
2.00	2.63	0.31	0.344	31202000	8808310
2.13	2.75	0.31	0.344	31202125	8808510
2.25	2.88	0.31	0.344	31202250	8808710
2.38	3.00	0.31	0.344	31202375	8808910
2.50	3.13	0.31	0.344	31202500	8870110
2.63	3.25	0.31	0.344	31202625	8851110
2.75	3.38	0.31	0.344	31202750	8809310
2.88	3.50	0.31	0.344	31202875	8809510
3.00	3.63	0.31	0.344	31203000	8809710
3.13	3.75	0.31	0.344	31203125	8809910
3.25	3.88	0.31	0.344	31203250	8879610
3.38	4.00	0.31	0.344	31203375	8810210
3.50	4.13	0.31	0.344	31203500	8810410
3.50	4.13	0.31	0.344	31203500	8899510
3.63	4.25	0.31	0.344	31203625	8851210
3.75	4.38	0.31	0.344	31203750	8870210
3.88	4.50	0.31	0.344	31203875	8870310
4.00	4.63	0.31	0.344	31204000	8810910
4.13	4.75	0.31	0.344	31204125	8811110
4.25	4.88	0.31	0.344	31204250	8811310
4.38	5.00	0.31	0.344	31204375	8811510
4.50	5.13	0.31	0.344	31204500	8811710
4.75	5.38	0.31	0.344	31204750	8879710
5.00	5.63	0.31	0.344	31205000	8812110
5.25	5.88	0.31	0.344	31205250	8856910
5.38	6.00	0.31	0.344	31205375	8812310

Rod/Piston seals

Hallite 511

inch

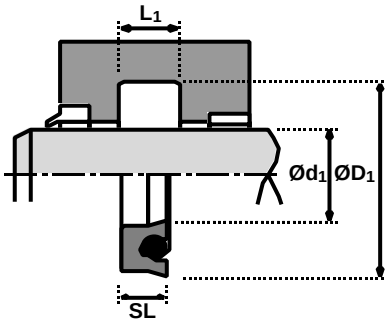

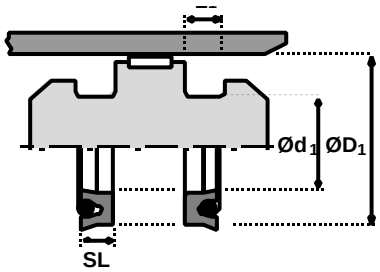

Ød1	ØD1	SL	L1	STD. REF.	PART No.
5.50	6.13	0.31	0.344	31205500	8812510
5.75	6.38	0.31	0.344	31205750	8857010
6.00	6.63	0.31	0.344	31206000	8812910
6.25	6.88	0.31	0.344	31206250	8857110
6.38	7.00	0.31	0.344	31206375	8813010
6.50	7.13	0.31	0.344	31206500	8876610
6.75	7.38	0.31	0.344	31206750	8857210
7.00	7.63	0.31	0.344	31207000	8879310
7.25	7.88	0.31	0.344	31207250	8857310
7.38	8.00	0.31	0.344	31207375	8876710
7.50	8.13	0.31	0.344	31207500	8813510
7.75	8.38	0.31	0.344	31207750	8857410
8.00	8.63	0.31	0.344	31208000	8876910
8.25	8.88	0.31	0.344	31208250	8857510
8.50	9.13	0.31	0.344	31208500	8857610
3/8 CROSS SECTION					
1.00	1.75	0.38	0.413	37501000	8819110
1.25	2.00	0.38	0.413	37501250	8814310
1.38	2.13	0.38	0.413	37501375	8814410
1.50	2.25	0.38	0.413	37501500	8814510
1.63	2.38	0.38	0.413	37501625	8814710
1.75	2.50	0.38	0.413	37501750	8814810
2.00	2.75	0.38	0.413	37502000	8814910
2.13	2.88	0.38	0.413	37502125	8815110
2.25	3.00	0.38	0.413	37502250	8869910
2.50	3.25	0.38	0.413	37502500	8815410
2.75	3.50	0.38	0.413	37502750	8815710
3.00	3.75	0.38	0.413	37503000	8815910
3.25	4.00	0.38	0.413	37503250	8816210
3.38	4.13	0.38	0.413	37503375	8857710
3.50	4.25	0.38	0.413	37503500	8816410
3.63	4.38	0.38	0.413	37503625	8824610
3.75	4.50	0.38	0.413	37503750	8816610
3.88	4.63	0.38	0.413	37503875	8819210
4.00	4.75	0.38	0.413	37504000	8816810
4.13	4.88	0.38	0.413	37504125	8853210
4.25	5.00	0.38	0.413	37504250	8817010
4.50	5.25	0.38	0.413	37504500	8817310
4.75	5.50	0.38	0.413	37504750	8817510
5.00	5.75	0.38	0.413	37505000	8817610
5.25	6.00	0.38	0.413	37505250	8817810
5.50	6.25	0.38	0.413	37505500	8818010
5.63	6.38	0.38	0.413	37505625	8814110
5.75	6.50	0.38	0.413	37505750	8818210
6.00	6.75	0.38	0.413	37506000	8818310
6.25	7.00	0.38	0.413	37506250	8818510
6.50	7.25	0.38	0.413	37506500	8818610
6.75	7.50	0.38	0.413	37506750	8818810
7.00	7.75	0.38	0.413	37507000	8877010
7.25	8.00	0.38	0.413	37507250	8818910
7.50	8.25	0.38	0.413	37507500	8877110
7.63	8.38	0.38	0.413	37507625	8814010
7.75	8.50	0.38	0.413	37507750	8853910
8.00	8.75	0.38	0.413	37508000	8869210
8.25	9.00	0.38	0.413	37508250	8851410
1/2 CROSS SECTION					
1.50	2.50	0.50	0.550	50001500	8814610
2.00	3.00	0.50	0.550	50002000	8815010
2.13	3.13	0.50	0.550	50002125	8853110
2.12	3.50	0.50	0.550	50002500	8815510
2.75	3.75	0.50	0.550	50002750	8900010
3.00	4.00	0.50	0.550	50003000	8816010
3.38	4.38	0.50	0.550	50003375	8866910
4.00	5.00	0.50	0.550	50004000	8816910
4.25	5.25	0.50	0.550	50004250	8858910
4.50	5.12	0.50	0.550	50004500	8817410
5.00	6.00	0.50	0.550	50005000	8817710
5.13	6.13	0.50	0.550	50005125	8851810
5.38	6.38	0.50	0.550	50005375	8863610
6.00	7.00	0.50	0.550	50006000	8818410
6.25	7.25	0.50	0.550	50006250	8857810
6.50	7.50	0.50	0.550	50006500	8815210
7.00	8.00	0.50	0.550	50007000	8851310
7.25	8.25	0.50	0.550	50007250	8857910
7.38	8.38	0.50	0.550	50007375	8863910
7.50	8.50	0.50	0.550	50007500	8851610
8.00	9.00	0.50	0.550	50008000	8819010
8.13	9.13	0.50	0.550	50008125	8853810
5/8 CROSS SECTION					
2.75	4.00	0.63	0.688	62502750	8819310
3.25	4.50	0.63	0.688	62503250	8822410
4.25	5.50	0.63	0.688	62504250	8819810
4.75	6.00	0.63	0.688	62504750	8819410
6.50	8.00	0.63	0.688	62506500	8819910
6.75	8.00	0.63	0.688	62506750	8819510

Rod/Piston seals

Hallite

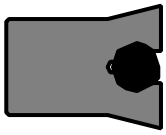

512

TECHNICAL DETAILS

METRIC ○ — INCH ●

OPERATING CONDITIONS

MAXIMUM SPEED	0.5 m/sec	1.5 ft/sec
TEMPERATURE RANGE	-40°C + 110°C	-40°F + 230°F
MAXIMUM PRESSURE	350 bar	5000 p.s.i.

MAXIMUM EXTRUSION GAP

Figures show the maximum permissible gap all on one side ,for rod seals using minimum rod Ø and maximum clearance Ø and for piston seals using the minimum clearance Ø and maximum bore Ø

(1/4" section and above)

PRESSURE bar	160	250	350
PRESSURE p.s.i.	2400	3750	5000
MAXIMUM GAP in	0.024	0.020	0.016

SURFACE ROUGHNESS

	µmRa	µmRt	µinCLA	µinRMS
DYNAMIC SEALING FACE $Ød_1$	0.1 ↔ 0.4	4 max	4 ↔ 16	5 ↔ 18
STATIC SEALING FACE $ØD_1$	1.6 max	10 max	63 max	70 max
STATIC HOUSING FACES L_1	3.2 max	16 max	125 max	140 max

CHAMFERS & RADII

GROOVE SECTION ≤ S in	0.125	0.187	0.250	0.312	0.375	0.500
MIN CHAMFER C in	0.093	0.093	0.125	0.156	0.187	0.187
MAX FILLET RAD r_1 in	0.008	0.008	0.016	0.032	0.032	0.032
MAX FILLET RAD r_2 in	0.016	0.016	0.032	0.047	0.047	0.047

TOLERANCES

Please refer to specified tolerances in the introduction - Housing & installation data - Hallite 500 Series

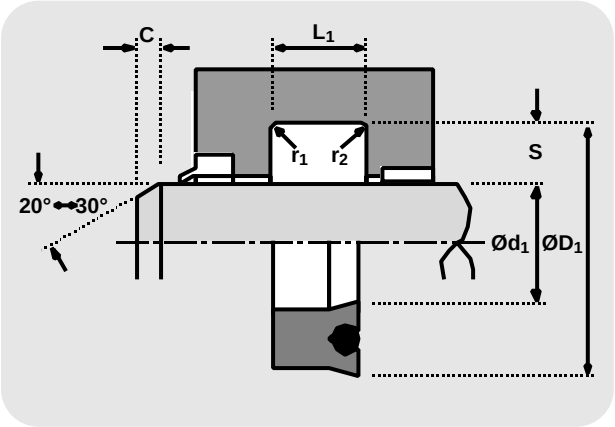

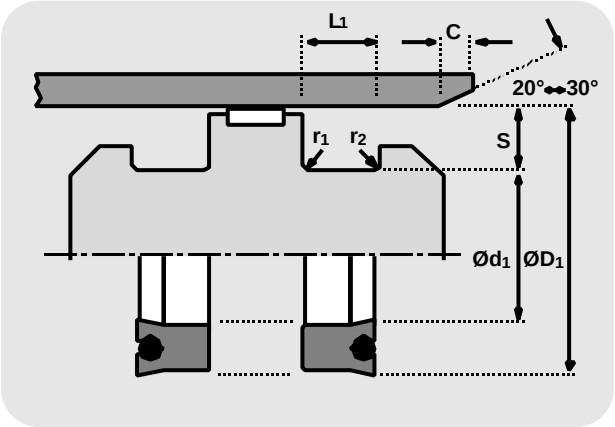

DESIGN

The Hallite 512 is a standard profile loaded U cup utilising a polyurethane or polyester shell energised by a high specification O ring.

At zero or low pressure, the O ring helps to increase the sealing force, preventing any by-pass. As pressure rises, so the sealing force increases, with the O ring ensuring complete lip actuation under most conditions.

The deep profile of this seal provides extra stability needed to resist rolling in the groove and together with the knife trimmed precision sealing lips, the results are improved life and sealing. The 512 can be used for single acting applications or fitted back to back for double acting applications. Although it can also be used as a rod seal, Other profiles like 513, 605 or 621 are a better option.
Technical details shown are for standard material option.

FEATURES

- FLEXIBLE FOR EASY INSTALLATION
- EXCELLENT RESISTANCE TO ABRASION
- POSITIVE LIP ACTUATION
- DEEP PROFILE FOR STABILITY
- WIDE RANGE OF SIZES AND MATERIAL OPTIONS

MATERIALS

Seal material - O-Ring	last digit of part number
Standard material:	
Polyurethane - NBR	_ _ _ _ _ **10**
Material options:	
Polyester - NBR	_ _ _ _ _ **11**
Polyester - FKM	_ _ _ _ _ **12**

Rod/Piston seals

Hallite 512

inch

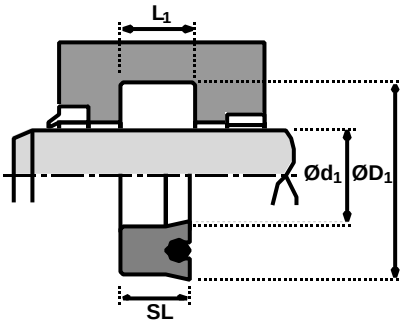

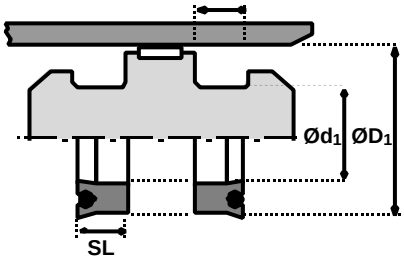

Ød1	ØD1	SL	L1	STD. REF.	PART No.
1/8 CROSS SECTION					
0.250	0.500	0.250	0.275	12500250-250	8820210
0.500	0.750	0.250	0.275	12500500-250	8870510
0.625	0.875	0.250	0.275	12500625-250	8820510
0.750	1.000	0.250	0.275	12500750-250	8820710
1.000	1.250	0.250	0.275	12501000-250	8821210
1.125	1.375	0.250	0.275	12501125-250	8854910
1.187	1.438	0.187	0.207	12501187-187	8858010
1.250	1.500	0.250	0.275	12501250-250	8821810
1.375	1.625	0.250	0.275	12501375-250	8822110
1.500	1.750	0.250	0.275	12501500-250	8822310
1.625	1.875	0.250	0.275	12501625-250	8870610
1.750	2.000	0.250	0.275	12501750-250	8822810
2.000	2.250	0.250	0.275	12502000-250	8823110
3/16 CROSS SECTION					
0.750	1.125	0.312	0.344	18700750-312	8820810
1.000	1.375	0.312	0.344	18701000-312	8821310
1.125	1.500	0.250	0.275	18701125-250	8820610
1.125	1.500	0.312	0.344	18701125-312	8821710
1.250	1.625	0.312	0.344	18701250-312	8821910
1.375	1.750	0.312	0.344	18701375-312	8822210
1.375	1.750	0.375	0.413	18701375-375	8870710
1.500	1.875	0.375	0.413	18701500-375	8822510
1.625	2.000	0.312	0.344	18701625-312	8858110
1.625	2.000	0.375	0.413	18701625-375	8822710
1.750	2.125	0.375	0.413	18701750-375	8822910
1.875	2.250	0.375	0.413	18701875-375	8870810
2.000	2.375	0.375	0.413	18702000-375	8823210
2.125	2.500	0.250	0.275	18702125-250	8865510
2.125	2.500	0.375	0.413	18702125-375	8870910
2.187	2.563	0.375	0.413	18702187-375	8858210
2.250	2.625	0.312	0.344	18702250-312	8858310
2.250	2.625	0.375	0.413	18702250-375	8823410
2.375	2.750	0.375	0.413	18702375-375	8858410
2.500	2.875	0.375	0.413	18702500-375	8871010
2.625	3.000	0.312	0.344	18702625-312	8858510
2.625	3.000	0.375	0.413	18702625-375	8823710
2.750	3.125	0.375	0.413	18702750-375	8871110
2.875	3.250	0.250	0.275	18702875-250	8865610
3.000	3.375	0.375	0.413	18703000-375	8823910
3.125	3.500	0.250	0.275	18703125-250	8867310
3.125	3.500	0.375	0.413	18703125-375	8871210
3.187	3.563	0.375	0.413	18703187-375	8858610
3.250	3.625	0.312	0.344	18703250-312	8858710
3.250	3.625	0.375	0.413	18703250-375	8824010
3.375	3.750	0.375	0.413	18703375-375	8858810
3.500	3.875	0.375	0.413	18703500-375	8824110
3.625	4.000	0.312	0.344	18703625-312	8864010
3.625	4.000	0.375	0.413	18703625-375	8824210
3.750	4.125	0.375	0.413	18703750-375	8855010
3.875	4.250	0.250	0.275	18703875-250	8820910
4.000	4.375	0.375	0.413	18704000-375	8824310
4.125	4.500	0.250	0.275	18704125-250	8867210
4.125	4.500	0.375	0.413	18704125-375	8871310
4.187	4.563	0.375	0.413	18704187-375	8859010
4.250	4.625	0.312	0.344	18704250-312	8859110
4.250	4.625	0.375	0.413	18704250-375	8824410
4.375	4.750	0.375	0.413	18704375-375	8859210
4.500	4.875	0.375	0.413	18704500-375	8824510
4.625	5.000	0.312	0.344	18704625-312	8859310
4.625	5.000	0.375	0.413	18704625-375	8855410
4.875	5.250	0.250	0.275	18704875-250	8821510
1/4 CROSS SECTION					
0.750	1.250	0.375	0.413	25000750-375	8825010
1.000	1.500	0.375	0.413	25001000-375	8825210
1.125	1.625	0.375	0.413	25001125-375	8847610
1.250	1.750	0.375	0.413	25001250-375	8825410
1.375	1.875	0.375	0.413	25001375-375	8825610
1.500	2.000	0.312	0.344	25001500-312	8821010
1.500	2.000	0.375	0.413	25001500-375	8825710
1.750	2.250	0.375	0.413	25001750-375	8825910
2.000	2.500	0.375	0.413	25002000-375	8826210
2.125	2.625	0.375	0.413	25002125-375	8826410
2.250	2.750	0.375	0.413	25002250-375	8826510

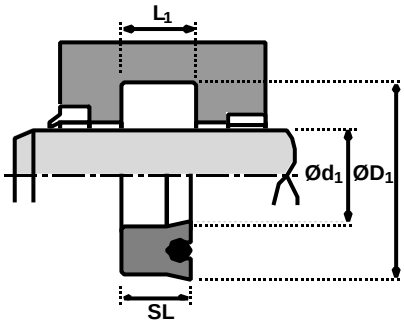

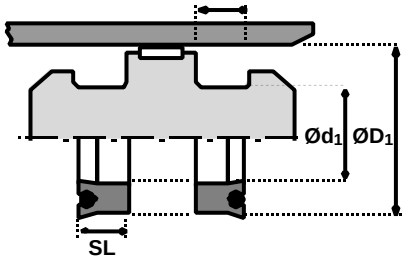

Rod/Piston seals

Hallite 512

inch

Ød1	ØD1	SL	L1	STD. REF.	PART No.
2.250	2.750	0.562	0.619	25002250-562	8864110
2.500	3.000	0.312	0.344	25002500-312	8821110
2.500	3.000	0.375	0.413	25002500-375	8826810
2.750	3.250	0.375	0.413	25002750-375	8826910
3.000	3.500	0.375	0.413	25003000-375	8827010
3.000	3.500	0.562	0.619	25003000-562	8850610
3.125	3.625	0.375	0.413	25003125-375	8859510
3.250	3.750	0.375	0.413	25003250-375	8827310
3.500	4.000	0.312	0.344	25003500-312	8865710
3.500	4.000	0.375	0.413	25003500-375	8827510
3.750	4.250	0.375	0.413	25003750-375	8827810
4.000	4.500	0.375	0.413	25004000-375	8827910
4.000	4.500	0.562	0.619	25004000-562	8828010
4.125	4.625	0.375	0.413	25004125-375	8859610
4.250	4.750	0.375	0.413	25004250-375	8828210
4.250	4.750	0.562	0.619	25004250-562	8833710
4.500	5.000	0.312	0.344	25004500-312	8821410
4.500	5.000	0.375	0.413	25004500-375	8828610
4.500	5.000	0.562	0.619	25004500-562	8828710
5.000	5.500	0.375	0.413	25005000-375	8871510
5.000	5.500	0.562	0.619	25005000-562	8828810
5.500	6.000	0.375	0.413	25005500-375	8829110
5.500	6.000	0.562	0.619	25005500-562	8829210
6.000	6.500	0.562	0.619	25006000-562	8829310
6.500	7.000	0.375	0.413	25006500-375	8829510
6.500	7.000	0.562	0.619	25006500-562	8829710
7.000	7.500	0.375	0.413	25007000-375	8822610
7.000	7.500	0.562	0.619	25007000-562	8877210
7.500	8.000	0.375	0.413	25007500-375	8829610
7.500	8.000	0.562	0.619	25007500-562	8877310
8.50	9.000	0.375	0.413	25008500-375	8829810
8.500	9.000	0.562	0.619	25008500-562	8855110

5/16 CROSS SECTION

1.000	1.625	0.500	0.550	31201000-500	8825310
1.375	2.000	0.500	0.550	31201375-500	8871610
1.500	2.125	0.500	0.550	31201500-500	8825810
1.750	2.375	0.500	0.550	31201750-500	8826010
1.875	2.500	0.500	0.550	31201875-500	8826110
2.000	2.625	0.500	0.550	31202000-500	8826310
2.250	2.875	0.500	0.550	31202250-500	8871710
2.375	3.000	0.500	0.550	31202375-500	8826710
2.500	3.125	0.500	0.550	31202500-500	8871810
2.750	3.375	0.500	0.550	31202750-500	8871910
2.875	3.500	0.500	0.550	31202875-500	8872010
3.000	3.625	0.500	0.550	31203000-500	8827110
3.375	4.000	0.500	0.550	31203375-500	8872110
3.500	4.125	0.500	0.550	31203500-500	8827710
3.750	4.375	0.500	0.550	31203750-500	8872210
3.875	4.500	0.500	0.550	31203875-500	8872310
4.375	5.000	0.500	0.550	31204375-500	8828410
4.375	5.000	0.625	0.688	31204375-625	8872410
4.500	5.125	0.625	0.688	31204500-625	8872510
5.375	6.000	0.625	0.688	31205375-625	8872610
6.375	7.000	0.625	0.688	31206375-625	8829410
7.000	7.625	0.625	0.688	31207000-625	8859710
7.375	8.000	0.625	0.688	31207375-625	8855310

3/8 CROSS SECTION

1.500	2.250	0.500	0.550	37501500-500	8872710
1.500	2.250	0.625	0.688	37501500-625	8872810
1.750	2.500	0.500	0.550	37501750-500	8830010
2.000	2.750	0.500	0.550	37502000-500	8830310
2.000	2.750	0.625	0.688	37502000-625	8830410
2.250	3.000	0.500	0.550	37502250-500	8872910
2.250	3.000	0.625	0.688	37502250-625	8873010
2.500	3.250	0.500	0.550	37502500-500	8879210
2.500	3.250	0.625	0.688	37502500-625	8830510
2.750	3.500	0.500	0.550	37502750-500	8830710
2.750	3.500	0.625	0.688	37502750-625	8830810
3.000	3.750	0.500	0.550	37503000-500	8831010
3.000	3.750	0.625	0.688	37503000-625	8878710
3.250	4.000	0.500	0.550	37503250-500	8831110
3.250	4.000	0.625	0.688	37503250-625	8831210
3.375	4.125	0.625	0.688	37503375-625	8855910
3.500	4.250	0.500	0.550	37503500-500	8878810

Rod/Piston seals

Hallite 512

inch

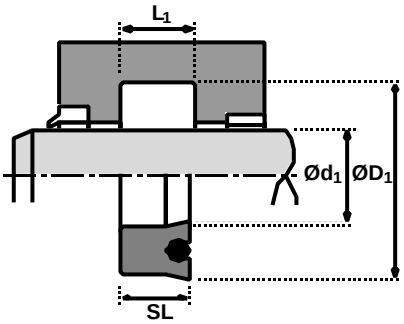

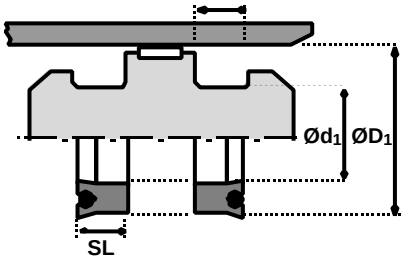

Ød1	ØD1	SL	L1	STD. REF.	PART No.
3.500	4.250	0.625	0.688	37503500-625	8831310
3.750	4.500	0.500	0.550	37503750-500	8831410
4.000	4.750	0.500	0.550	37504000-500	8878910
4.000	4.750	0.625	0.688	37504000-625	8831610
4.250	5.000	0.500	0.550	37504250-500	8831810
4.250	5.000	0.625	0.688	37504250-625	8831910
4.500	5.250	0.500	0.550	37504500-500	8832010
4.500	5.250	0.625	0.688	37504500-625	8832110
4.750	5.500	0.625	0.688	37504750-625	8832210
5.000	5.750	0.500	0.550	37505000-500	8879110
5.000	5.750	0.625	0.688	37505000-625	8832310
5.250	6.000	0.625	0.688	37505250-625	8832610
5.750	6.500	0.500	0.550	37505750-500	8829010
5.750	6.500	0.625	0.688	37505750-625	8832810
6.000	6.750	0.625	0.688	37506000-625	8833010
6.250	7.000	0.500	0.550	37506250-500	8833210
6.250	7.000	0.625	0.688	37506250-625	8833310
6.500	7.250	0.625	0.688	37506500-625	8833410
6.750	7.500	0.625	0.688	37506750-625	8850810

Ød1	ØD1	SL	L1	STD. REF.	PART No.
7.000	7.750	0.500	0.550	37507000-500	8859810
7.000	7.750	0.625	0.688	37507000-625	8877610
7.250	8.000	0.625	0.688	37507250-625	8833510
7.750	8.500	0.625	0.688	37507750-625	8859910
8.250	9.000	0.500	0.550	37508250-500	8860010
8.250	9.000	0.625	0.688	37508250-625	8853710

1/2 CROSS SECTION

1.500	2.500	0.750	0.825	50001500-750	8820310
2.000	3.000	0.750	0.825	50002000-750	8853410
3.000	4.000	0.750	0.825	50003000-750	8850510
3.500	4.500	0.750	0.825	50003500-750	8823010
4.000	5.000	0.750	0.825	50004000-750	8853510
5.000	6.000	0.750	0.825	50005000-750	8832410
5.500	6.500	0.750	0.825	50005500-750	8823310
6.000	7.000	0.750	0.825	50006000-750	8833110
7.000	8.000	0.750	0.825	50007000-750	8851910
7.500	8.500	0.750	0.825	50007500-750	8820410
8.000	9.000	0.750	0.825	50008000-750	8855210

Rod Seals

Hallite

513

TECHNICAL DETAILS

METRIC ○ INCH ●

OPERATING CONDITIONS

MAXIMUM SPEED	0.5 m/sec	1.5 ft/sec
TEMPERATURE RANGE	-40°C + 110°C	-40°F + 230°F
MAXIMUM PRESSURE	350 bar	5000 p.s.i.

MAXIMUM EXTRUSION GAP

Figures show the maximum permissible gap all on one side using minimum rod Ø and maximum clearance Ø.

(1/4" section and above)

PRESSURE bar	160	250	350
PRESSURE p.s.i.	2400	3750	5000
MAXIMUM GAP in	0.024	0.020	0.016

SURFACE ROUGHNESS

	µmRa	µmRt	µinCLA	µinRMS
DYNAMIC SEALING FACE $Ød_1$	0.1 ↔ 0.4	4 max	4 ↔ 16	5 ↔ 18
STATIC SEALING FACE $ØD_1$	1.6 max	10 max	63 max	70 max
STATIC HOUSING FACES L_1	3.2 max	16 max	125 max	140 max

CHAMFERS & RADII

GROOVE SECTION ≤ S in	0.125	0.187	0.250	0.312	0.375	0.500
MIN CHAMFER C in	0.093	0.093	0.125	0.156	0.187	0.187
MAX FILLET RAD r_1 in	0.008	0.008	0.016	0.032	0.032	0.032
MAX FILLET RAD r_2 in	0.016	0.016	0.032	0.047	0.047	0.047

TOLERANCES

Please refer to specified tolerances in the introduction - Housing & installation data - Hallite 500 Series

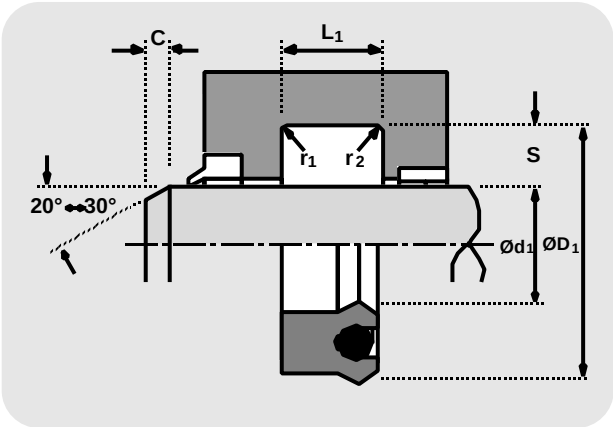

DESIGN

The Hallite 513 is a standard profile loaded U cup utilising a polyurethane or polyester shell energised by a high specification resilient O ring.

At zero or low pressure, the O ring helps to increase the sealing force preventing any bypass. As pressure rises the sealing force increases and the O ring provides complete lip actuation under most conditions.
The precision trimmed sealing lips ensure optimum sealing action.

FEATURES

- FLEXIBLE FOR EASY INSTALLATION
- EXCELLENT RESISTANCE TO ABRASION
- POSITIVE LIP ACTUATION
- KNIFE TRIMMED PRECISION SEALING LIPS
- COMPACT HOUSING
- WIDE RANGE OF SIZES
- MATERIAL OPTIONS

MATERIALS

Seal material - O-Ring	last digit of part number
Standard material:	
Polyurethane - NBR	_ _ _ _ _ **10**
Material options:	
Polyester - NBR	_ _ _ _ _ **11**
Polyester - FKM	_ _ _ _ _ **12**

Rod seals

Hallite 513

inch

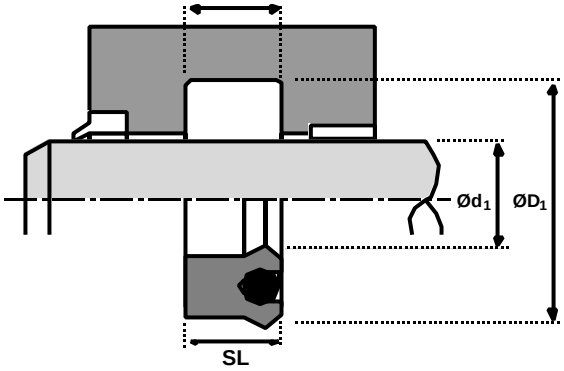

Ød1	ØD1	SL	L1	STD. REF.	PART No.
1/8 CROSS SECTION					
.250	.500	.187	.207	12500250-187B	8845910
.250	.500	.250	.275	12500250-250B	8878510
.375	.625	.250	.275	12500375-250B	8823810
.437	.687	.250	.275	12500437-250B	8846910
.500	.750	.250	.275	12500500-250B	8834010
.625	.875	.187	.207	12500625-187B	8848710
.625	.875	.250	.275	12500625-250B	8834110
.750	1.000	.250	.275	12500750-250B	8834210
.875	.125	.250	.275	12500875-250B	8845310
.875	1.125	.250	.275	12500937-250B	8845310
1.000	1.250	.187	.207	12501000-187B	8860110
1.000	1.250	.250	.275	12501000-250B	8834410
1.062	1.312	.250	.275	12501062-250B	8847510
1.125	1.375	.125	.275	12501125-125B	8899910
1.125	1.375	.250	.275	12501125-250B	8855610
1.125	1.375	.312	.344	12501125-312B	8848810
1.187	1.437	.250	.275	12501187-250B	8848910
1.250	1.500	.187	.207	12501250-187B	8860210
1.250	1.500	.250	.275	12501250-250B	8834710
1.375	1.625	.187	.207	12501375-187B	8860310
1.375	1.625	.250	.275	12501375-250B	8834910
1.437	1.687	.250	.275	12501437-250B	8849010
1.500	1.750	.250	.275	12501500-250B	8835210
1.625	1.875	.187	.207	12501625-187B	8849110
1.625	1.875	.250	.275	12501625-250B	8873110
1.750	2.000	.250	.275	12501750-250B	8835610
1.875	2.125	.187	.207	12501875-187B	8845810
1.875	2.125	.250	.275	12501875-250B	8845410
2.000	2.250	.187	.207	12502000-187B	8860410
2.000	2.250	.250	.275	12502000-250B	8873210
2.500	2.750	.250	.275	12502500-250B	8902210
2.875	3.125	.250	.275	12502875-250B	8844710
3.875	4.125	.250	.275	12503875-250B	8845510
4.875	5.125	.250	.275	12504875-250B	8845610
3/16 CROSS SECTIONB					
.500	.875	.250	.275	18700500-250B	8848010
.500	.875	.312	.344	18700500-312B	8852910
.750	1.125	.187	.207	18700750-187B	8849810
.750	1.125	.250	.275	18700750-250B	8846010
.750	1.125	.312	.344	18700750-312B	8834310
.750	1.125	.375	.413	18700750-375B	8855810
.875	1.250	.312	.344	18700875-312B	8900210
1.000	1.375	.187	.207	18701000-187B	8806110
1.000	1.375	.250	.275	18701000-250B	8860510
1.000	1.375	.312	.344	18701000-312B	8834510
1.062	1.437	.312	.344	18701062-312B	8850010
1.125	1.500	.250	.275	18701125-250B	8844910
1.125	1.500	.312	.344	18701125-312B	8834610
1.187	1.600	.312	.344	18701187-312B	8902310
1.250	1.625	.250	.275	18701250-250B	8860610
1.250	1.625	.312	.344	18701250-312B	8834810
1.250	1.625	.375	.413	18701250-375B	8860710
1.375	1.750	.250	.275	18701375-250B	8844710
1.375	1.750	.312	.344	18701375-312B	8835010
1.375	1.750	.375	.413	18701375-375B	8835110
1.500	1.875	.187	.275	18701500-187B	8851510
1.500	1.875	.250	.275	18701500-250B	8835310
1.500	1.875	.312	.344	18701500-312B	8849710
1.500	1.875	.375	.413	18701500-375B	8835410
1.500	1.875	.406	.447	18701500-406B	8848110
1.625	2.000	.250	.275	18701625-250B	8868410
1.625	2.000	.312	.344	18701625-312B	8864210
1.625	2.000	.375	.413	18701625-375B	8835510
1.750	2.125	.230	.250	18701750-230B	8852010
1.750	2.125	.312	.344	18701750-312B	8865410
1.750	2.125	.375	.413	18701750-375B	8835710
1.875	2.250	.375	.413	18701875-375B	8835810
2.000	2.375	.230	.250	18702000-230B	8806210
2.000	2.375	.250	.275	18702000-250B	8868110
2.000	2.375	.312	.344	18702000-312B	8860810
2.000	2.375	.375	.413	18702000-375B	8835910
2.125	2.500	.250	.275	18702125-250B	8845010
2.125	2.500	.375	.413	18702125-375B	8836010
2.250	2.625	.312	.344	18702250-312B	8860910
2.250	2.625	.375	.413	18702250-375B	8873310
2.375	2.750	.375	.413	18702375-375B	8861010
2.500	2.875	.375	.413	18702500-375B	8836210
2.625	3.000	.250	.275	18702625-250B	8868510
2.625	3.000	.312	.344	18702625-312B	8864310
2.625	3.000	.375	.413	18702625-375B	8836310
2.750	3.125	.187	.207	18702750-187B	8849910
2.750	3.125	.312	.344	18702750-312B	8846110

Hallite 513

inch

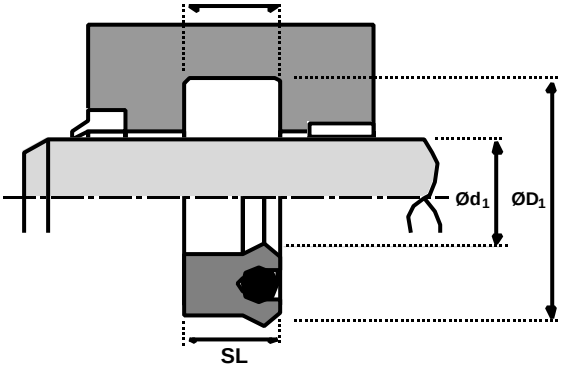

Ød1	ØD1	SL	L1	STD. REF.	PART No.
2.750	3.125	.375	.413	18702750-375B	8836410
2.875	3.250	.375	.413	18702875-375B	8861110
3.000	3.375	.187	.207	18703000-187B	8806710
3.000	3.375	.250	.275	18703000-250B	8868210
3.000	3.375	.312	.344	18703000-312B	8861210
3.000	3.375	.375	.413	18703000-375B	8836510
3.125	3.500	.250	.275	18703125-250B	8845110
3.125	3.500	.375	.413	18703125-375B	8836610
3.250	3.625	.312	.344	18703250-312B	8861310
3.250	3.625	.375	.413	18703250-375B	8873410
3.375	3.750	.375	.413	18703375-375B	8836710
3.500	3.875	.375	.413	18703500-375B	8836810
3.625	4.000	.250	.275	18703625-250B	8868610
3.625	4.000	.312	.344	18703625-312B	8864410
3.625	4.000	.375	.413	18703625-375B	8836910
3.750	4.125	.187	.207	18703750-187B	8850210
3.750	4.125	.312	.344	18703750-312B	8846210
3.750	4.125	.375	.413	18703750-375B	8837010
3.875	4.250	.375	.413	18703875-375B	8861410
4.000	4.375	.187	.207	18704000-187B	8820010
4.000	4.375	.250	.275	18704000-250B	8868310
4.000	4.375	.312	.344	18704000-312B	8861510
4.000	4.375	.375	.413	18704000-375B	8837110
4.125	4.500	.250	.275	18704125-250B	8845210
4.125	4.500	.375	.413	18704125-375B	8837210
4.250	4.625	.312	.344	18704250-312B	8861610
4.250	4.625	.375	.413	18704250-375B	8837310
4.375	4.750	.375	.413	18704375-375B	8861710
4.500	4.875	.375	.413	18704500-375B	8837510
4.625	5.000	.250	.275	18704625-250B	8868710
4.625	5.000	.312	.344	18704625-312B	8864510
4.625	5.000	.375	.413	18704625-375B	8837610
4.750	5.125	.375	.413	18704750-375B	8846610
4.875	5.250	.375	.413	18704875-375B	8861810
5.000	5.375	.375	.413	18705000-375B	8842510

1/4 CROSS SECTION

Ød1	ØD1	SL	L1	STD. REF.	PART No.
.500	1.000	.375	.413	25000500-375B	8837710
.625	1.125	.312	.344	25000625-312B	8849210
.750	1.250	.375	.413	25000750-375B	8837810
.875	1.375	.312	.344	25000875-312B	8830210
.875	1.375	.375	.413	25000875-375B	8864610

Ød1	ØD1	SL	L1	STD. REF.	PART No.
1.000	1.500	.375	.413	25001000-375B	8837910
1.125	1.625	.250	.413	25001125-250B	8804910
1.125	1.625	.375	.413	25001125-375B	8856110
1.250	1.750	.375	.413	25001250-375B	8838110
1.375	1.875	.375	.413	25001375-375B	8878610
1.375	2.250	.250	.413	25001500-312B	8805610
1.500	2.000	.312	.344	25001500-375B	8867710
1.500	2.000	.375	.413	25001625-375B	8838310
1.625	2.125	.375	.413	25001750-250B	8849610
1.750	2.250	.375	.413	250017503-75B	8838510
1.875	2.375	.375	.413	25001875-375B	8859410
2.000	2.500	.250	.413	25002000-250B	8856010
2.000	2.500	.375	.413	25002000-375B	8838610
2.125	2.625	.375	.413	25002125-250B	8856310
2.175	2.625	.250	.413	25002125-375B	8805810
2.250	2.750	.375	.413	25002250-375B	8838710
2.375	2.875	.375	.413	25002375-375B	8850110
2.375	2.875	.562	.413	25002375-562B	8900610
2.500	3.000	.312	.344	25002500-312B	8867810
2.500	3.000	.375	.413	25002500-375B	8839010
2.625	3.125	.375	.413	25002625-375B	8849310
2.750	3.250	.250	.413	25002750-250B	8805910
2.750	3.250	.375	.413	25002750-375B	8839110
2.875	3.375	.562	.619	25002875-375B	8900610
3.000	3.500	.375	.413	25003000-375B	8839310
3.000	3.500	.500	.550	25003000-500B	8842110
3.000	3.500	.562	.619	25003000-562B	8852210
3.125	3.625	.250	.413	25003125-250B	8848510
3.125	3.625	.375	.413	25003125-375B	8856210
3.250	3.750	.375	.413	25003250-375B	8839410
3.375	3.875	.375	.413	25003375-375B	8849410
3.375	3.875	.562	.619	25003375-562B	8900710
3.500	4.000	.312	.344	25003500-312B	8867910
3.500	4.000	.375	.413	25003500-375B	8839510
3.625	4.125	.375	.413	25003625-375B	8849510
3.750	4.250	.250	.413	25003750-250B	884610
3.750	4.250	.375	.413	25003750-375B	8839710
3.750	4.250	.562	.619	25003750-562B	8839810
3.875	4.375	.375	.413	25003875-375B	8832510
4.000	4.500	.375	.413	25004000-375B	8840010
4.000	4.500	.500	.550	25004000-500B	8867510
4.000	4.500	.562	.619	25004000-562B	8840110

Rod seals

Hallite 513

inch

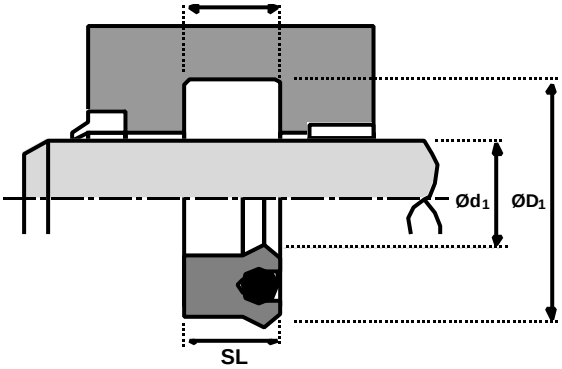

Ød1	ØD1	SL	L1	STD. REF.	PART No.
4.125	4.625	.250	.413	25004125-250B	8806010
4.125	4.625	.375	.413	25004125-375B	8856410
4.250	4.750	.375	.413	25004250-375B	8840210
4.375	4.875	.250	.413	25004375-250B	8848310
4.375	4.875	.562	.616	25004375-562B	8900510
4.500	5.000	.250	.344	25004500-250B	8817110
4.500	5.000	.312	.344	25004500-312B	8868010
4.500	5.000	.375	.413	25004500-375B	8840510
4.500	5.000	.500	.550	25004500-500B	8864710
4.500	5.000	.562	.619	25004500-562B	8840610
4.625	5.125	.250	.413	25004500-250B	8848410
4.750	5.250	.375	.413	25004750-375B	8861910
4.750	5.250	.500	.550	25004750-500B	8846310
4.750	5.250	.562	.619	25004750-562B	8840910
4.875	5.375	.375	.413	25004875-375B	8832910
5.000	5.500	.375	.413	25005000-375B	8841010
5.000	5.500	.500	.550	25005000-500B	8866810
5.000	5.500	.562	.619	25005000-562B	8841110
5.250	5.750	.562	.619	25005250-562B	8862010
5.500	6.000	.375	.413	25005500-375B	8841310
5.500	6.000	.500	.413	25005500-500B	8833610
5.500	6.000	.562	.619	25005500-562B	8841410
5.750	6.250	.375	.413	25005750-375B	8866410
5.750	6.250	.562	.619	25005750-562B	8841610
6.000	6.500	.375	.413	25006000-375B	8852310
6.000	6.500	.500	.550	25006000-500B	8867610
6.000	6.500	.562	.619	25006000-562B	8841710
6.500	7.000	.250	.275	25006500-250B	8899410
6.500	7.000	.375	.413	25006500-375B	8852610
6.500	7.000	.500	.550	25006500-500B	8846410
6.500	7.000	.562	.619	25006500-562B	8841910
6.750	7.250	.375	.413	25006750-375B	8865910
6.750	7.250	.500	.550	25006750-500B	8866010
6.750	7.250	.562	.619	25006750-562B	8866310
7.000	7.500	.375	.413	25007000-375B	8852410
7.000	7.500	.500	.550	25007000-500B	8842410
7.000	7.500	.562	.619	25007000-562B	8877910
7.250	7.750	.562	.619	25007250-562B	8862110
7.500	8.000	.375	.413	25007500-375B	8852510
7.500	8.000	.500	.550	25007500-500B	8833810
7.500	8.000	.562	.619	25007500-562B	8852810
8.000	8.500	.250	.275	25008000-250B	8899710
8.000	8.500	.562	.619	25008000-562B	8842310
8.500	9.000	.375	.413	25008500-375B	8852710
8.500	9.000	.500	.550	25008500-500B	8833910
8.500	9.000	.562	.619	25008500-562B	8853010

5/16 CROSS SECTION

Ød1	ØD1	SL	L1	STD. REF.	PART No.
1.000	1.625	.375	.413	31201000-375B	8828310
1.000	1.625	.500	.550	31201000-500B	8838010
1.125	1.750	.500	.550	31201125-500B	8879810
1.250	1.875	.312	.550	31201250-312B	8809810
1.250	1.875	.500	.550	31201250-500B	8838210
1.375	2.000	.312	.550	31201375-312B	8825110
1.375	2.000	.500	.550	31201375-500B	8873510
1.500	2.125	.375	.413	31201500-375B	8846510
1.500	2.125	.500	.550	31201500-500B	8838410
1.750	2.375	.375	.413	31201750-375B	8868810
1.750	2.375	.500	.550	31201750-500B	8873610
1.875	2.500	.500	.550	31201875-500B	8873710
2.000	2.625	.500	.550	31202000-500B	8873810
2.000	2.625	.562	.619	31202000-562B	8862210
2.125	2.750	.500	.550	31202125-500B	8879910
2.125	2.750	.625	.688	31202125-625B	8864810
2.250	2.875	.312	.550	31202250-312B	8816310
2.250	2.875	.500	.550	31202250-500B	8838810
2.375	3.000	.031	.550	31202375-312B	8827210
2.375	3.000	.500	.550	31202375-500B	8838910
2.500	3.125	.375	.413	31202500-375B	8836110
2.500	3.125	.500	.550	31202500-500B	8873910
2.750	3.375	.375	.413	31202750-375B	8868910
2.750	3.375	.500	.550	31202750-500B	8839210
2.875	3.500	.500	.550	31202875-500B	8874010
3.000	3.625	.375	.413	31203000-375B	8828510
3.000	3.625	.500	.550	31203000-500B	8874110
3.125	3.750	.500	.550	31203125-500B	8869810
3.250	3.875	.425	.550	31203250-312B	8820110
3.250	3.875	.500	.550	31203250-500B	8869710
3.375	4.000	.312	.550	31203375-312B	8827410
3.375	4.000	.500	.550	31203375-500B	8874210
3.500	4.125	.375	.413	31203500-375B	8837410
3.500	4.125	.500	.550	31203500-500B	8874310
3.750	4.375	.375	.413	31203750-375B	8869010
3.750	4.375	.500	.550	31203750-500B	8874410

Hallite 513

inch

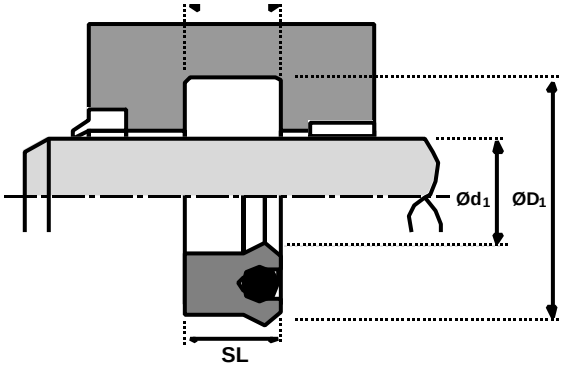

Ød1	ØD1	SL	L1	STD. REF.	PART No.
3.875	4.500	.500	.550	31203875-500B	8839910
4.000	4.625	.500	.550	31204000-500B	8874510
4.000	4.625	.562	.619	31204000-562B	8862310
4.125	4.750	.500	.550	31204125-500B	8869610
4.125	4.750	.625	.688	31204125-625B	8869510
4.250	4.875	.312	.550	31204250-312B	8821610
4.250	4.875	.500	.550	31204250-500B	8869410
4.375	5.000	.312	.550	31204375-312B	8827610
4.375	5.000	.500	.550	31204375-500B	8874610
4.375	5.000	.625	.688	31204375-625B	8840410
4.500	5.125	.375	.413	31204500-375B	8840710
4.500	5.125	.625	.688	31204500-625B	8840810
4.750	5.375	.500	.550	31204750-500B	8869310
4.750	5.375	.625	.688	31204750-625B	8862410
5.000	5.625	.625	.688	31205000-625B	8874710
5.250	5.875	.625	.688	31205250-625B	8862510
5.375	6.000	.625	.688	31205375-625B	8841210
6.000	6.625	.625	.688	31206000-625B	8862610
6.375	7.000	.625	.688	31206375-625B	8841810
6.500	7.125	.625	.688	31206500-625B	8869110
6.750	7.375	.625	.688	31206750-625B	8862710
7.000	7.625	.625	.688	31207000-625B	8854810
7.250	7.875	.625	.688	31207250-625B	8862810
7.375	8.000	.500	.550	31207375-500B	8842610
7.375	8.000	.625	.688	31207375-625B	8864910
8.000	8.625	.500	.550	31208000-500B	8866610
8.500	9.125	.625	.688	31208500-625B	8862910

3/8 CROSS SECTION

1.250	2.000	.500	.550	37501250-500B	8842010
1.500	2.250	.500	.550	37501500-500B	8874810
1.500	2.250	.625	.688	37501625-375B	8842710
1.625	2.375	.375	.550	37501500-625B	8901010
1.750	2.500	.500	.550	37501750-500B	8874910
1.750	2.500	.625	.688	37501750-625B	8875010
2.000	2.750	.500	.550	37502000-500B	8875110
2.000	2.750	.625	.688	37502000-625B	8842810
2.250	3.000	.500	.550	37502250-500B	8875210
2.250	3.000	.625	.688	37502250-625B	8842910
2.375	3.125	.625	.688	37502375-625B	8846810
2.500	3.250	.500	.550	37502500-500B	8875310
2.500	3.250	.625	.688	37502500-625B	8843010
2.625	3.375	.625	.688	37502625-625B	8863710
2.750	3.500	.500	.550	37502750-500B	8875410
2.750	3.500	.625	.688	37502750-625B	8843110
3.000	3.750	.500	.550	37503000-500B	8875510
3.000	3.750	.625	.688	37503000-625B	8843210
3.125	3.875	.625	.688	37503125-625B	8900310
3.250	4.000	.500	.550	37503250-500B	8875610
3.250	4.000	.625	.688	37503250-625B	8843310
3.375	4.125	.625	.688	37503375-625B	8852110
3.500	4.250	.500	.550	37503500-500B	8875710
3.500	4.250	.625	.688	37503500-625B	8843410
3.625	4.375	.625	.688	37503625-625B	8865310
3.750	4.500	.500	.550	37503750-500B	8875810
3.750	4.500	.625	.688	37503750-625B	8875910
4.000	4.750	.500	.550	37504000-500B	8876010
4.000	4.750	.625	.688	37504000-625B	8843510
4.250	5.000	.038	.550	37504250-375B	8867410
4.250	5.000	.500	.550	37504250-500B	8876110
4.250	5.000	.625	.688	37504250-625B	8843610
4.500	5.250	.500	.550	37504500-500B	8876210
4.500	5.250	.625	.688	37504500-625B	8843710
4.750	5.500	.500	.550	37504750-500B	8876310
4.750	5.500	.625	.688	37504750-625B	8876410
5.000	5.750	.500	.550	37505000-500B	8876510
5.000	5.750	.625	.688	37505000-625B	8843810
5.250	6.000	.500	.550	37505250-500B	8865010
5.250	6.000	.625	.688	37505250-625B	8843910
5.250	6.000	.750	.825	37505250-750B	8854410
5.500	6.250	.500	.550	37505500-500B	8863010
5.500	6.250	.625	.688	37505500-625B	8844010
5.750	6.500	.500	.550	37505750-500B	8866110
5.750	6.500	.625	.688	37505750-625B	8878010
5.875	6.500	.625	.688	37505875-625B	8900410
6.000	6.750	.500	.550	37506000-500B	8866210
6.000	6.750	.625	.688	37506000-625B	8844110
6.250	7.000	.500	.688	37506250-500B	8902410
6.250	7.000	.625	.688	37506250-625B	8844210
6.500	7.250	.500	.550	37506500-500B	8853310
6.500	7.250	.625	.688	37506500-625B	8844310
6.750	7.500	.500	.550	37506750-500B	8854610
6.750	7.500	.625	.688	37506750-625B	8854710
7.000	7.750	.500	.550	37507000-500B	8854010

Rod seals

Hallite
513

inch

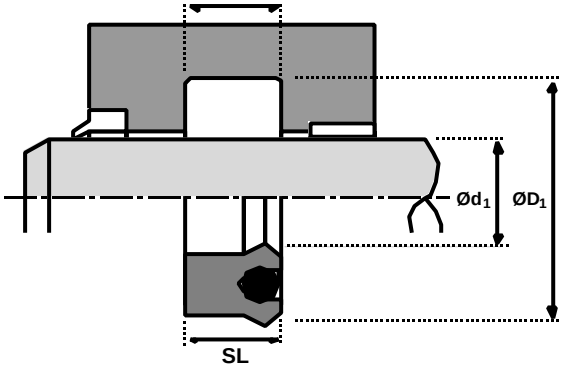

Ød1	ØD1	SL	L1	STD. REF.	PART No.
7.000	7.750	.625	.688	37507000-625B	8844410
7.250	8.000	.500	.550	37507250-500B	8865110
7.250	8.000	.625	.688	37507250-625B	8844510
7.250	8.000	.750	.825	37507250-750B	8854510
7.500	8.250	.500	.550	37507500-500B	8863210
7.500	8.250	.625	.688	37507500-625B	8878110
7.750	8.500	.500	.550	37507750-500B	8865210
7.750	8.500	.625	.688	37507750-625B	8853610
8.000	8.750	.625	.688	37508000-625B	8878210
8.250	9.000	.625	.688	37508250-625B	8854110
1/2 CROSS SECTION					
1.750	2.750	.750	.825	50001750-750B	8847010

Ød1	ØD1	SL	L1	STD. REF.	PART No.
2.000	3.000	.750	.825	50002000-750B	8876810
2.500	3.500	.750	.825	50002500-750B	8847110
3.000	4.000	.750	.825	50003000-750B	8863310
4.000	5.000	.750	.825	50004000-750B	8877410
4.250	5.250	.750	.825	50004250-750B	8847210
4.500	5.500	.750	.825	50004500-750B	8847310
5.250	6.250	.750	.825	50005250-750B	8847510
6.000	7.000	.750	.825	50006000-750B	8863410
6.250	7.250	.750	.825	50006250-750B	8847710
7.000	8.000	.750	.825	50007000-750B	8870410
7.250	8.250	.750	.825	50007250-750B	8847810
7.750	8.750	.750	.825	50007750-750B	8847910
8.000	9.000	.750	.825	50008000-750B	8863510

Hallite

520

TECHNICAL DETAILS

METRIC ○ — INCH ●

OPERATING CONDITIONS				
MAXIMUM SPEED	4.0 m/sec		12.0 ft/sec	
TEMPERATURE RANGE	-40°C + 110°C		-40°F + 230°F	
SURFACE ROUGHNESS	µmRa	µmRt	µinCLA	µinRMS
DYNAMIC SEALING FACE $Ød_1$	0.1 ↔ 0.4	4 max	4 ↔ 16	5 ↔ 18
STATIC SEALING FACE $ØD_1$ $ØD_2$	1.6 max	10 max	63 max	70 max
STATIC HOUSING FACES L_1	3.2 max	16 max	125 max	140 max
RADII				
MAX FILLET RAD r_1 in	0.016			
MAX FILLET RAD r_2 in	0.016			

TOLERANCES in	$Ød_1$	$ØD_1$	$ØD_2$	L_1
	f9	±0.003	±0.005	+0.004 -0

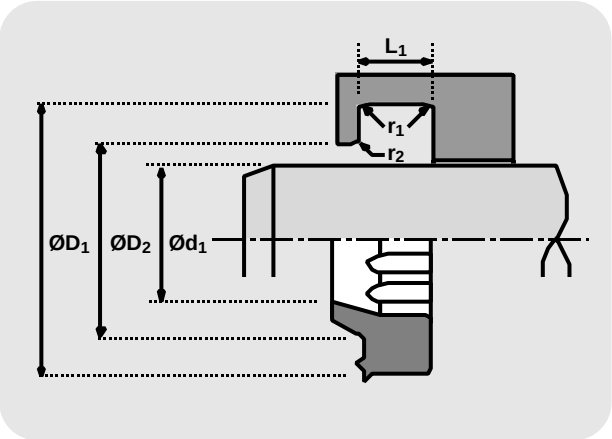

DESIGN

The Hallite 520 snap-in rod wiper has been designed to fit "Universal" style housings. The proportions of the wiping lip ensure that contact is maintained with the surface of the rod to remove heavily deposited mud, ice, etc. The outside diameter contacts the housing diameter and has a sealing lip to prevent moisture entering the groove. The moulded ribs on the internal diameter provides extra stability to the seal and help prevent pressure trapping.

The Hallite 520 is available in polyurethane or a polyester based compound and can be used with a split housing, however the majority can be installed in a blind housing with care.

FEATURES

- PRECISION TRIMMED SEALING LIP
- ‚CRUSH LIP„ AND ‚FACE BEAD„ PROVIDE EFFECTIVE SEAL ON HOUSING
- LOW WEAR LONG LIFE
- COST EFFECTIVE
- PRESSURE RELIEF RIBS
- POLYESTER MATERIAL FOR HEAVY DUTY APPLICATIONS

MATERIAL OPTION

The part numbers shown are for polyurethane. If you require this product in polyester, please add a ‚P„ after the part number when ordering.

For example:

8880910 = polyurethane
8880910P = polyester.

Wipers

Hallite 520

inch

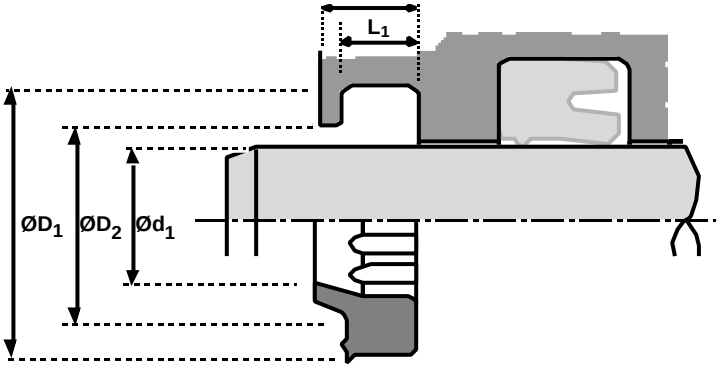

Ød1	TOL f9	ØD1	TOL	ØD2	TOL	L1 +0.004 -0	L2	PART No.
0.500	-0.0005 -0.0019	0.750	+0.003 -0.003	0.665	+0.005 -0.005	0.125	0.187	8880210
0.625	-0.0006 -0.0023	0.875	+0.003 -0.003	0.790	+0.005 -0.005	0.125	0.187	8880310
0.750	-0.0008 -0.0028	1.125	+0.003 -0.003	1.000	+0.005 -0.005	0.187	0.281	8880410
0.875	-0.0008 -0.0028	1.250	+0.003 -0.003	1.125	+0.005 -0.005	0.187	0.281	8880510
1.000	-0.0008 -0.0028	1.375	+0.003 -0.003	1.250	+0.005 -0.005	0.187	0.281	8880610
1.125	-0.0008 -0.0028	1.500	+0.003 -0.003	1.375	+0.005 -0.005	0.187	0.281	8880710
1.187	-0.0008 -0.0028	1.562	+0.003 -0.003	1.437	+0.005 -0.005	0.187	0.281	8880810
1.250	-0.0010 -0.0034	1.625	+0.003 -0.003	1.500	+0.005 -0.005	0.187	0.281	8880910
1.375	-0.0010 -0.0034	1.750	+0.003 -0.003	1.625	+0.005 -0.005	0.187	0.281	8881110
1.500	-0.0010 -0.0034	1.875	+0.003 -0.003	1.750	+0.005 -0.005	0.187	0.281	8881210
1.625	-0.0010 -0.0034	2.000	+0.003 -0.003	1.875	+0.005 -0.005	0.187	0.281	8881310
1.750	-0.0010 -0.0034	2.125	+0.003 -0.003	2.000	+0.005 -0.005	0.187	0.281	8881410
2.000	-0.0012 -0.0041	2.500	+0.003 -0.003	2.332	+0.005 -0.005	0.250	0.375	8881510
2.250	-0.0012 -0.0041	2.750	+0.003 -0.003	2.582	+0.005 -0.005	0.250	0.375	8881610
2.375	-0.0012 -0.0041	2.875	+0.003 -0.003	2.707	+0.005 -0.005	0.250	0.375	8887210
2.500	-0.0012 -0.0041	3.000	+0.003 -0.003	2.832	+0.005 -0.005	0.250	0.375	8881710
2.750	-0.0012 -0.0041	3.250	+0.003 -0.003	3.082	+0.005 -0.005	0.250	0.375	8881810
3.000	-0.0012 -0.0041	3.500	+0.003 -0.003	3.332	+0.005 -0.005	0.250	0.375	8881910
3.250	-0.0014 -0.0048	3.750	+0.003 -0.003	3.582	+0.005 -0.005	0.250	0.375	8882010
3.500	-0.0014 -0.0048	4.000	+0.003 -0.003	3.832	+0.005 -0.005	0.250	0.375	8882110
3.750	-0.0014 -0.0048	4.250	+0.003 -0.003	4.082	+0.005 -0.005	0.250	0.375	8882210
3.875	-0.0014 -0.0048	4.375	+0.003 -0.003	4.207	+0.005 -0.005	0.250	0.375	8888810
4.000	-0.0014 -0.0048	4.500	+0.003 -0.003	4.332	+0.005 -0.005	0.250	0.375	8882310

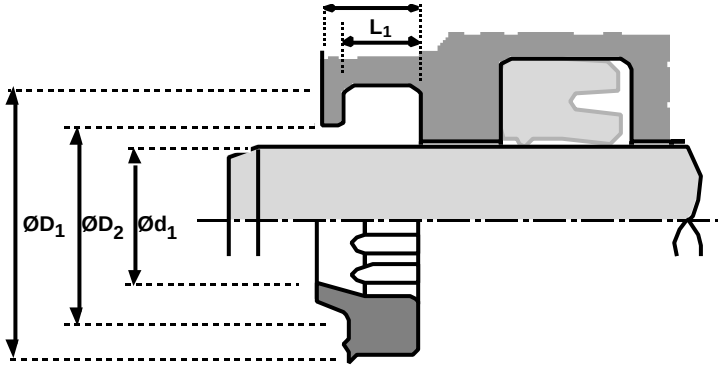

Wipers

Hallite 520

inch

Ød1	TOL f9	ØD1	TOL	ØD2	TOL	L1 +0.004 -0	L2	PART No.
4.250	-0.0014 -0.0048	4.750	+0.003 -0.003	4.582	+0.005 -0.005	0.250	0.375	8882410
4.500	-0.0014 -0.0048	5.250	+0.003 -0.003	4.998	+0.005 -0.005	0.375	0.562	8882510
4.750	-0.0014 -0.0048	5.500	+0.003 -0.003	5.248	+0.005 -0.005	0.375	0.562	8887310
5.000	-0.0017 -0.0056	5.500	+0.003 -0.003	5.332	+0.005 -0.005	0.250	0.375	8887910
5.000	-0.0017 -0.0056	5.750	+0.003 -0.003	5.498	+0.005 -0.005	0.375	0.562	8882610
5.250	-0.0017 -0.0056	6.000	+0.003 -0.003	5.748	+0.005 -0.005	0.375	0.562	8882710
5.500	-0.0017 -0.0056	6.250	+0.003 -0.003	5.998	+0.005 -0.005	0.375	0.562	8882810
6.000	-0.0017 -0.0056	6.500	+0.003 -0.003	6.332	+0.005 -0.005	0.250	0.375	8888010
6.000	-0.0017 -0.0056	6.750	+0.003 -0.003	6.498	+0.005 -0.005	0.375	0.562	8882910
7.000	-0.0017 -0.0056	7.500	+0.003 -0.003	7.332	+0.005 -0.005	0.250	0.375	8888310
7.000	-0.0017 -0.0056	7.750	+0.003 -0.003	7.498	+0.005 -0.005	0.375	0.562	8883210
8.000	-0.0020 -0.0065	8.750	+0.003 -0.003	8.498	+0.005 -0.005	0.375	0.562	8883310
8.125	-0.0020 -0.0065	8.625	+0.003 -0.003	8.457	+0.005 -0.005	0.250	0.375	8888410

Notes

Hallite

533

TECHNICAL DETAILS

METRIC ○ — ● INCH

OPERATING CONDITIONS

MAXIMUM SPEED	5.0 m/sec	15.0 ft/sec
TEMPERATURE RANGE	-40°C + 120°C	-40°F + 250°F

SURFACE ROUGHNESS

		µmRa	µmRt	µmCLA	µmRMS
ROD	DYNAMIC SEALING FACE $Ød_1$	0.4	4 max	16	18
	STATIC SEALING FACE $ØD_2$ L_1	3.2max	16max	125max	140 max
PISTON	DYNAMIC SEALING FACE $ØD_1$	0.4	4 max	16	18
	STATIC SEALING FACE $Ød_2$ L_1	3.2 max	16 max	125 max	140 max

HOUSING DETAILS & TOLERANCES

L_1 in	+0.015 +0.010		
r_1 in	0.016 max		
ROD $Ød_1$ in	f9		
$ØD_2$ in	$Ød_1$ + 2S	+0.004 -0.000	
$ØD_3$ in	$Ød_1$ + G		
PISTON $ØD_1$ in	H11		
$Ød_2$ in	$ØD_1$ -2S	+0.000 -0.004	
$Ød_3$ in	$ØD_1$ - G		
1/8 nominal cross sections - in	S = 0.126	G max 0.080	G min 0.031
3/32 nominal cross sections - in	S = 0.093	G max 0.060	G min 0.031

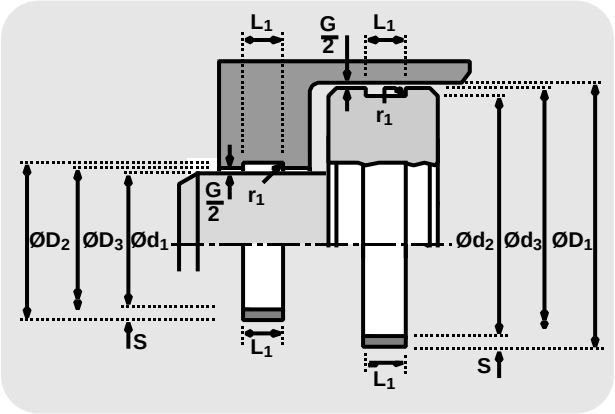

DESIGN

Hallite 533 glass filled nylon wear rings are designed for reciprocating piston and rod bearing applications.

The material is heat stabilised 33% glass reinforced nylon 66, which offers excellent bearing properties. The material is compatible with hydraulic and lubricating oils. The material is not recommended for use in water based fluids (H.F.A) or where significant water is present, due to the swell of the nylon. For these applications the use of Hallite 506 or Hallite 63 bearings are recommended.

NOTE : Metric sizes are also available upon request. For further information about these and any other sizes that you are looking for, please contact your local Hallite sales office.

FEATURES

- MOULDED TO SIZE
- EASY INSTALLATION
- ROBUST
- LONG LIFE

Bearings

Hallite 533

inch

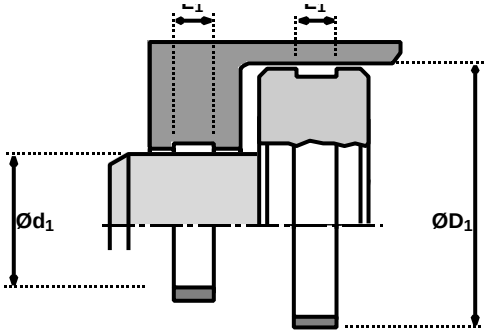

ØD1	Ød1	L1	PART No.
1.250	1.000	1.000	F30220
1.500	1.250	0.250	F30005
1.500	1.250	0.375	F30006
1.500	1.250	0.500	F30305
1.500	1.312	0.187	F30004
1.500	1.312	0.375	F30352
1.750	1.500	0.190	F30234
1.750	1.500	0.375	F30201
1.750	1.500	0.500	F30013
1.875	1.625	0.190	F30179
1.875	1.625	0.375	F30235
1.875	1.625	0.500	F30306
2.000	1.750	0.187	F40001
2.000	1.750	0.250	F30018
2.000	1.750	0.312	F30020
2.000	1.750	0.375	F30022
2.000	1.750	0.500	F30024
2.000	1.750	0.750	F30025
2.000	1.812	0.375	F30325
2.125	1.875	0.375	F20026
2.250	2.000	0.187	F40029
2.250	2.000	0.250	F30196
2.250	2.000	0.312	F30032
2.250	2.000	0.375	F30033
2.250	2.000	0.500	F30035
2.250	2.000	0.625	F30036
2.250	2.000	0.750	F30037
2.375	2.125	0.500	F30038
2.500	2.250	0.187	F30040
2.500	2.250	0.250	F30041
2.500	2.250	0.312	F30043
2.500	2.250	0.375	F30044
2.500	2.250	0.500	F30045
2.500	2.250	0.625	F30047
2.500	2.250	0.750	F30048
2.500	2.250	1.000	F30286
2.500	2.312	0.375	F30326
2.625	2.375	0.375	F20179
2.625	2.375	0.625	F30285
2.750	2.500	0.250	F30209

ØD1	Ød1	L1	PART No.
2.750	2.500	0.375	F30051
2.750	2.500	0.500	F30052
2.750	2.500	0.625	F30054
2.750	2.500	0.750	F30055
2.750	2.500	1.000	F30056
3.000	2.750	0.250	F30061
3.000	2.750	0.312	F30062
3.000	2.750	0.375	F30063
3.000	2.750	0.500	F30064
3.000	2.750	0.625	F30191
3.000	2.750	0.750	F30066
3.000	2.750	1.000	F30067
3.000	2.812	0.375	F30327
3.250	3.000	0.250	F30207
3.250	3.000	0.312	F30259
3.250	3.000	0.375	F30069
3.250	3.000	0.500	F30070
3.250	3.000	0.625	F30287
3.250	3.000	0.750	F30072
3.250	3.000	1.000	F30074
3.250	3.062	0.375	F30353
3.500	3.250	0.250	F30079
3.500	3.250	0.312	F30255
3.500	3.250	0.375	F30080
3.500	3.250	0.500	F30083
3.500	3.250	0.625	F30085
3.500	3.250	0.750	F30087
3.500	3.250	1.000	F30275
3.500	3.312	0.375	F30328
3.625	3.375	0.500	F30090
3.625	3.375	1.000	F30091
3.750	3.500	0.250	F40027
3.750	3.500	0.312	F30260
3.750	3.500	0.375	F30092
3.750	3.500	0.500	F30093
3.750	3.500	0.625	F30094
3.750	3.500	0.750	F30095
4.000	3.750	0.250	F30100
4.000	3.750	0.312	F30256
4.000	3.750	0.375	F30101

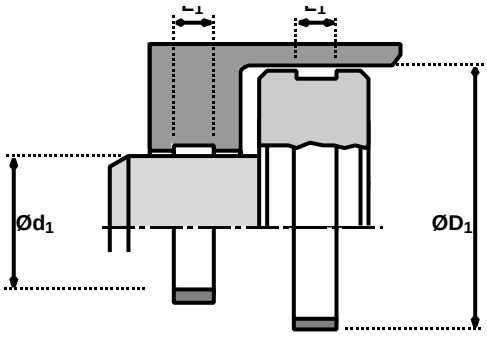

Bearings

Hallite 533

inch

ØD1	Ød1	L1	PART No.
4.000	3.750	0.500	F30102
4.000	3.750	0.625	F30104
4.000	3.750	0.750	F30105
4.000	3.750	1.000	F30219
4.250	4.000	0.312	F30261
4.250	4.000	0.375	F30107
4.250	4.000	0.500	F30108
4.250	4.000	0.625	F30109
4.250	4.000	0.750	F30110
4.250	4.000	1.000	F30112
4.500	4.250	0.312	F30262
4.500	4.250	0.375	F30114
4.500	4.250	0.500	F30115
4.500	4.250	0.625	F30118
4.500	4.250	0.750	F30120
4.500	4.250	1.000	F30278
4.750	4.500	0.375	F30194
4.750	4.500	0.500	F30121
4.750	4.500	0.750	F30123
4.750	4.500	1.000	F30124
5.000	4.750	0.375	F30126
5.000	4.750	0.500	F30127
5.000	4.750	0.625	F30128
5.000	4.750	0.750	F30129
5.000	4.750	1.000	F30169
5.250	5.000	0.500	F30131
5.250	5.000	0.625	F30132
5.250	5.000	0.750	F30133
5.250	5.000	1.000	F30269
5.500	5.250	0.375	F30135
5.500	5.250	0.500	F30136
5.500	5.250	0.625	F30138
5.500	5.250	0.750	F30140
5.500	5.250	1.000	F30141
5.750	5.500	0.750	F30143
5.750	5.500	1.000	F30144
6.000	5.750	0.500	F30145
6.000	5.750	0.625	F30147
6.000	5.750	0.750	F30208
6.000	5.750	1.000	F30149
6.250	6.000	0.500	F30279
6.250	6.000	0.625	F30151
6.250	6.000	0.750	F30152
6.250	6.000	1.000	F30153
6.500	6.250	0.500	F30154
6.500	6.250	0.750	F30199
6.500	6.250	1.000	F30157
6.750	6.500	1.000	F30276
7.000	6.750	0.500	F30158
7.000	6.750	0.625	F30159
7.000	6.750	0.750	F30277
7.000	6.750	1.000	F30160
7.250	7.000	0.500	F30281
7.250	7.000	0.750	F30284
7.250	7.000	1.000	F30289
7.500	7.250	0.500	F30162
7.500	7.250	0.750	F30165
7.500	7.250	1.000	F30166
7.750	7.500	0.500	F20160
7.750	7.500	1.000	F30247
8.000	7.750	1.000	F30231
8.250	8.000	1.000	F30248
8.500	8.250	0.500	F30168
8.500	8.250	1.000	F30246
8.750	8.500	1.000	F30249
9.000	8.750	1.000	F30230
9.250	9.000	1.000	F30253
9.500	9.250	1.000	F30254
9.750	9.500	1.000	F30250
10.000	9.750	1.000	F30221
10.250	10.000	1.000	F30258
10.500	10.250	1.000	F30257
11.000	10.750	1.000	F30222
11.250	11.000	1.000	F30251
11.500	11.250	1.000	F30252
12.000	11.750	1.000	F30223
13.000	12.750	1.000	F30224

Notes

Rod/Piston seals

Hallite

601

TECHNICAL DETAILS

METRIC ○ — INCH ●

OPERATING CONDITIONS

MAXIMUM SPEED	1.0 m/sec	3.0 ft/sec
TEMPERATURE RANGE	-45°C + 110°C	-50°F + 230°F
MAXIMUM PRESSURE	400 bar*	6,000 p.s.i.*

MAXIMUM EXTRUSION GAP

Figures show the maximum permissible gap all on one side ,for rod seals using minimum rod Ø and maximum clearance Ø and for piston seals using the minimum clearance Ø and maximum bore Ø

PRESSURE bar	160	250	400
MAXIMUM GAP mm	0.6	0.5	0.4
PRESSURE p.s.i.	2400	3750	6000
MAXIMUM GAP in	0.024	0.020	0.016

SURFACE ROUGHNESS

	µmRa	µmRt	µinCLA	µinRMS
DYNAMIC SEALING FACE - ROD $Ød_1$	0.1 ↔ 0.4	4 max	4 ↔ 16	5 ↔ 18
STATIC SEALING FACE - ROD $ØD_1$	1.6 max	10 max	63 max	70 max
DYNAMIC SEALING FACE - PISTON $ØD_1$	0.1 ↔ 0.4	4 max	4 ↔ 16	5 ↔ 18
STATIC SEALING FACE - PISTON $Ød_1$	1.6 max	10 max	63 max	70 max
STATIC HOUSING FACES L_1	3.2 max	16 max	125 max	140 max

CHAMFERS & RADII

GROOVE SECTION ≤ S mm	4.0	5.0	7.5	10.0	12.5	15.0	20.0
MIN CHAMFER C mm	3.0	3.5	5.0	6.5	7.0	8.0	10.0
MAX FILLET RAD r_1 mm	0.2	0.4	0.8	0.8	1.2	1.6	1.6
MAX FILLET RAD r_2 mm	0.4	0.8	1.2	1.2	1.6	2.4	2.4
GROOVE SECTION ≤ S in	0.125	0.187	0.250	0.312	0.375	0.500	
MIN CHAMFER C in	0.093	0.093	0.125	0.156	0.187	0.217	
MAX FILLET RAD r_1 in	0.008	0.008	0.016	0.032	0.032	0.032	
MAX FILLET RAD r_2 in	0.016	0.016	0.032	0.047	0.047	0.047	

TOLERANCES

	$Ød_1$	$ØD_1$	L_1 mm	L_1 in
ROD	f9	Js11	+0.25 -0	+0.010 -0
PISTON	js11	H9	+0.25 -0	+0.010 -0

* Pressure rating of seal can be extended to 700 bar /10,000p.s.i. with the use of a back up ring.
If this option is required seek advice from your local Hallite Seals sales office.

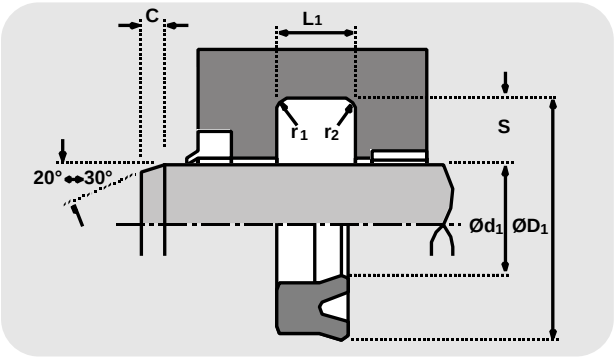

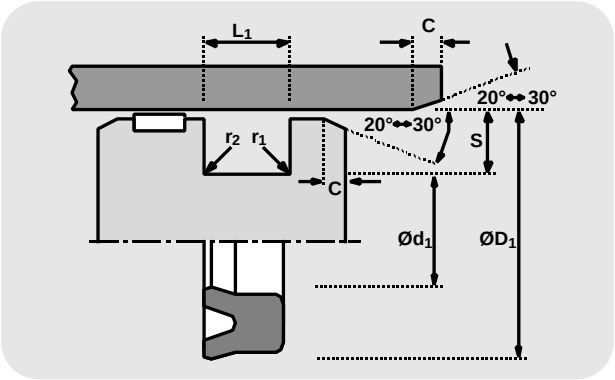

DESIGN

The Hallite 601 is a high performance general purpose seal suitable for rod and piston use.

Manufactured in Hythane® 181 - Hallite„s 601 is engineered to effect a good seal in most industrial cylinder applications.

The sealing lips are accurately machine trimmed to ensure good low pressure sealing while the material resists extrusion at high pressures.

FEATURES

- GENERAL PURPOSE SEAL
- EXCELLENT TEMPERATURE RESISTANCE
- EASE OF INSTALLATION

NB:
Hallite 606 is a preferred option for back to back piston applications.

Part numbers commencing 46 . . . . .
are designed to suit popular Asian housings.

Part numbers suffixed by ‡‡" indicate housing sizes to meet ISO5597.

Size lists give "on line" tolerances for rod

Rod/Piston seals

Hallite 601

metric

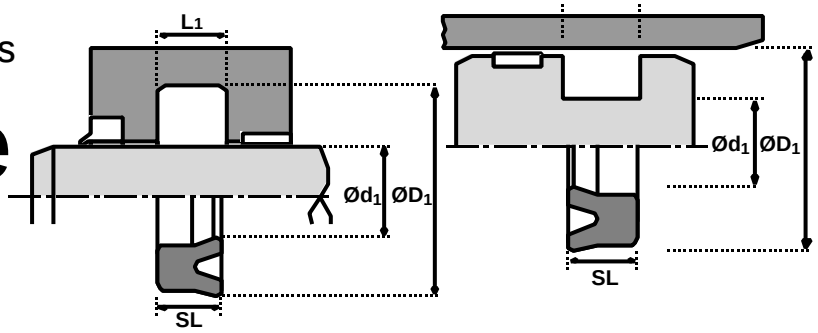

For bore tolerances refer to datasheet.

Ød1	TOL f9	ØD1	TOL Js11	SL	L1 +0.25-0	PART No.
4.5	-0.010 -0.040	12.5	+0.03 -0.03	4.4	5.0	4506701
5	-0.010 -0.040	12	+0.03 -0.03	5.5	6.5	4508601
6	-0.010 -0.040	13	+0.03 -0.03	8.0	9.0	4460300
10	-0.016 -0.059	18	+0.06 -0.06	6.0	6.6	4299900
10	-0.016 -0.059	20	+0.07 -0.07	8.0	9.0	4600000
12	-0.016 -0.059	18	+0.07 -0.07	6.0	7.0	4621300
12	-0.016 -0.059	20	+0.07 -0.07	4.4	5.0	4182501‡
12	-0.016 -0.059	25	+0.07 -0.07	8.0	9.0	4600100
14	-0.016 -0.059	22	+0.07 -0.07	4.4	5.0	4182601‡
14	-0.016 -0.059	22	+0.07 -0.07	5.0	5.7	4604000
14	-0.016 -0.059	24	+0.07 -0.07	8.0	9.0	4600200
15	-0.016 -0.059	25	+0.07 -0.07	8.0	9.0	4600300
16	-0.016 -0.059	24	+0.07 -0.07	4.4	5.0	4182701‡
16	-0.016 -0.059	24	+0.07 -0.07	5.0	5.7	4604100
16	-0.016 -0.059	26	+0.07 -0.07	8.0	9.0	4600400
18	-0.016 -0.059	26	+0.07 -0.07	4.4	5.0	4182901‡
18	-0.016 -0.059	26	+0.07 -0.07	5.0	5.7	4604200
18	-0.016 -0.059	28	+0.07 -0.07	7.3	8.0	4547900
18	-0.016 -0.059	28	+0.07 -0.07	8.0	9.0	4600500
20	-0.020 -0.072	28	+0.07 -0.07	4.4	5.0	4183001‡
20	-0.020 -0.072	28	+0.07 -0.07	5.0	5.7	4604300
20	-0.020 -0.072	30	+0.07 -0.07	8.0	9.0	4600600
22	-0.020 -0.072	30	+0.07 -0.07	4.4	5.0	4183101‡

Ød1	TOL f9	ØD1	TOL Js11	SL	L1 +0.25-0	PART No.
22	-0.020 -0.072	35	+0.08 -0.08	10.0	11.0	4600700
22	-0.020 -0.072	40	+0.08 -0.08	10.0	11.0	4572900
22.4	-0.020 -0.072	30	+0.07 -0.07	5.0	5.7	4604400
22.4	-0.020 -0.072	32.4	+0.08 -0.08	8.0	9.0	4600800
25	-0.020 -0.072	33	+0.08 -0.08	4.4	5.0	4183301‡
25	-0.020 -0.072	33	+0.08 -0.08	5.0	5.7	4604500
25	-0.020 -0.072	35	+0.08 -0.08	8.0	9.0	4600900
25	-0.020 -0.072	35	+0.08 -0.08	10.0	11.0	4362600
25	-0.020 -0.072	38	+0.08 -0.08	8.0	9.0	4601000
25	-0.020 -0.072	38	+0.08 -0.08	10.0	11.0	4621400
25	-0.020 -0.072	40	+0.08 -0.08	10.0	11.0	4601100
26	-0.020 -0.072	40	+0.08 -0.08	9.2	10.0	4584900
28	-0.020 -0.072	35.5	+0.08 -0.08	5.0	5.7	4604600
28	-0.020 -0.072	36	+0.08 -0.08	6.5	7.1	4506201
28	-0.020 -0.072	38	+0.08 -0.08	5.6	6.3	4183401‡
28	-0.020 -0.072	40	+0.08 -0.08	10.0	11.0	4601200
28	-0.020 -0.072	43	+0.08 -0.08	10.0	11.0	4601300
30	-0.020 -0.072	37	+0.08 -0.08	6.0	7.0	4596800
30	-0.020 -0.072	40	+0.08 -0.08	5.6	6.3	4183501
30	-0.020 -0.072	40	+0.08 -0.08	6.0	7.0	4604700
30	-0.020 -0.072	40	+0.08 -0.08	8.0	9.0	4596900
30	-0.020 -0.072	40	+0.08 -0.08	10.0	11.0	4362700
30	-0.020 -0.072	45	+0.08 -0.08	10.0	11.0	4601400

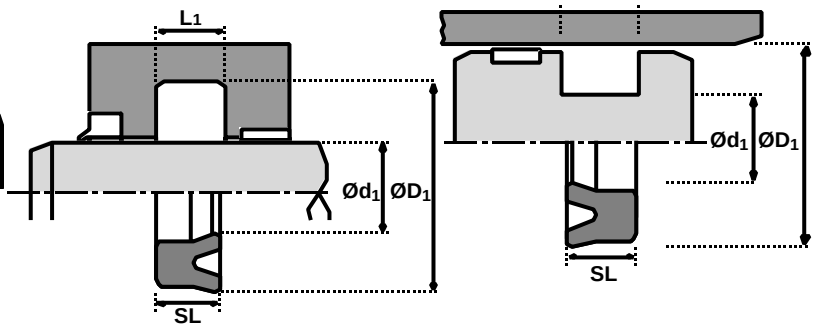

For bore tolerances refer to datasheet.

Rod/Piston seals

Hallite 601

metric

Ød1	TOL f9	ØD1	TOL Js11	SL	L1 +0.25-0	PART No.
31.5	-0.025 -0.087	41.5	+0.08 -0.08	6.0	7.0	4604800
32	-0.025 -0.087	42	+0.08 -0.08	5.6	6.3	4183601‡
32	-0.025 -0.087	42	+0.08 -0.08	6.0	7.0	4604900
32	-0.025 -0.087	42	+0.08 -0.08	10.0	11.0	4362800
32	-0.025 -0.087	47	+0.08 -0.08	10.0	11.0	4621200
35	-0.025 -0.087	45	+0.08 -0.08	6.0	7.0	4605000
35	-0.025 -0.087	45	+0.08 -0.08	7.0	8.0	4496000
35	-0.025 -0.087	48	+0.08 -0.08	10.0	11.0	4360300
35	-0.025 -0.087	50	+0.08 -0.08	10.0	11.0	4601500
35.5	-0.025 -0.087	45	+0.08 -0.08	6.0	7.0	4605100
35.5	-0.025 -0.087	50.5	+0.08 -0.08	10.0	11.0	4621100
36	-0.025 -0.087	46	+0.08 -0.08	5.6	6.3	4183701‡
38	-0.025 -0.087	48	+0.08 -0.08	6.0	7.0	4605200
38	-0.025 -0.087	50	+0.08 -0.08	9.0	10.0	4709400
38	-0.025 -0.087	55	+0.10 -0.10	9.7	11.0	4366000
38	-0.025 -0.087	58	+0.10 -0.10	9.7	11.0	4560100
40	-0.025 -0.087	50	+0.08 -0.08	5.6	6.3	4183801‡
40	-0.025 -0.087	50	+0.08 -0.08	6.0	7.0	4605300
40	-0.025 -0.087	50	+0.08 -0.08	10.0	11.0	4362900
40	-0.025 -0.087	55	+0.10 -0.10	9.9	11.0	4388500
40	-0.025 -0.087	55	+0.10 -0.10	10.0	11.0	4601600
40	-0.025 -0.087	60	+0.10 -0.10	12.0	13.0	4601700
45	-0.025 -0.087	55	+0.10 -0.10	5.6	6.3	4183901‡

Ød1	TOL f9	ØD1	TOL Js11	SL	L1 +0.25-0	PART No.
45	-0.025 -0.087	55	+0.10 -0.10	6.0	7.0	4605400
45	-0.025 -0.087	55	+0.10 -0.10	10.0	11.0	4363000
45	-0.025 -0.087	56	+0.10 -0.10	7.0	8.0	4605500
45	-0.025 -0.087	60	+0.10 -0.10	10.0	11.0	4601800
45	-0.025 -0.087	65	+0.10 -0.10	10.0	11.0	4575000
46	-0.025 -0.087	56	+0.10 -0.10	6.0	7.0	4543900
48	-0.025 -0.087	63	+0.10 -0.10	10.0	11.0	4601900
50	-0.025 -0.087	60	+0.10 -0.10	5.6	6.3	4184001‡
50	-0.025 -0.087	60	+0.10 -0.10	6.0	7.0	4605600
50	-0.025 -0.087	60	+0.10 -0.10	10.0	11.0	4363100
50	-0.025 -0.087	65	+0.10 -0.10	10.0	11.0	4602000
50	-0.025 -0.087	70	+0.10 -0.10	12.0	13.0	4602100
52	-0.025 -0.087	62	+0.10 -0.10	10.0	11.0	4559000
53	-0.030 -0.104	63	+0.10 -0.10	6.0	7.0	4605700
55	-0.030 -0.104	65	+0.10 -0.10	6.0	7.0	4605800
55	-0.030 -0.104	75	+0.10 -0.10	12.0	13.0	4602200
56	-0.030 -0.104	66	+0.10 -0.10	6.0	7.0	4605900
56	-0.030 -0.104	71	+0.10 -0.10	8.4	9.5	4184201‡
60	-0.030 -0.104	70	+0.10 -0.10	6.0	7.0	4606000
60	-0.030 -0.104	70	+0.10 -0.10	10.0	11.0	4363200
60	-0.030 -0.104	71	+0.10 -0.10	7.0	8.0	4606100
60	-0.030 -0.104	76	+0.10 -0.10	12.0	13.0	4608000
60	-0.030 -0.104	80	+0.10 -0.10	12.0	13.0	4602300

Rod/Piston seals

Hallite 601

metric

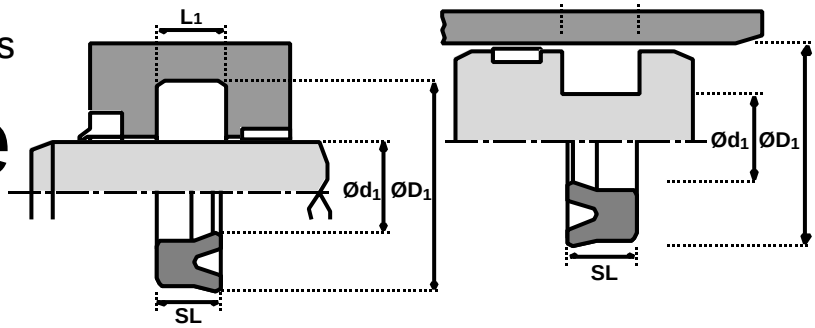

For bore tolerances refer to datasheet.

Ød1	TOL f9	ØD1	TOL Js11	SL	L1 +0.25-0	PART No.
63	-0.030 -0.104	73	+0.10 -0.10	6.0	7.0	4606200
63	-0.030 -0.104	73	+0.10 -0.10	11.8	13.0	4363300
63	-0.030 -0.104	78	+0.10 -0.10	8.4	9.5	4184301‡
65	-0.030 -0.104	75	+0.10 -0.10	6.0	7.0	4606300
65	-0.030 -0.104	80	+0.10 -0.10	8.4	9.5	4184401‡
65	-0.030 -0.104	85	+0.11 -0.11	12.0	13.0	4602400
70	-0.030 -0.104	80	+0.10 -0.10	6.0	7.0	4606400
70	-0.030 -0.104	80	+0.10 -0.10	11.8	13.0	4363400
70	-0.030 -0.104	85	+0.11 -0.11	8.4	9.5	4184501‡
70	-0.030 -0.104	90	+0.11 -0.11	12.0	13.0	4602500
70	-0.030 -0.104	92	+0.11 -0.11	12.0	13.0	4602600
71	-0.030 -0.104	80	+0.10 -0.10	6.0	7.0	4606500
75	-0.030 -0.104	85	+0.11 -0.11	6.0	7.0	4606600
75	-0.030 -0.104	85	+0.11 -0.11	11.8	13.0	4363500
75	-0.030 -0.104	95	+0.11 -0.11	12.0	13.0	4602700
75	-0.030 -0.104	100	+0.11 -0.11	22.0	24.0	4584700
80	-0.030 -0.104	90	+0.11 -0.11	6.0	7.0	4606700
80	-0.030 -0.104	90	+0.11 -0.11	8.0	8.7	4159001
80	-0.030 -0.104	90	+0.11 -0.11	11.8	13.0	4363600
80	-0.030 -0.104	95	+0.11 -0.11	8.4	9.5	4184601‡
80	-0.030 -0.104	100	+0.11 -0.11	12.0	13.0	4602800
85	-0.036 -0.123	100	+0.11 -0.11	8.4	9.5	4184701‡
85	-0.036 -0.123	100	+0.11 -0.11	8.9	10.0	4606800

Ød1	TOL f9	ØD1	TOL Js11	SL	L1 +0.25-0	PART No.
85	-0.036 -0.123	105	+0.11 -0.11	12.0	13.0	4602900
90	-0.036 -0.123	100	+0.11 -0.11	11.8	13.0	4363700
90	-0.036 -0.123	105	+0.11 -0.11	8.4	9.5	4184801‡
90	-0.036 -0.123	105	+0.11 -0.11	8.9	10.0	4606900
90	-0.036 -0.123	110	+0.11 -0.11	12.0	13.0	4603000
95	-0.036 -0.123	110	+0.11 -0.11	8.9	10.0	4607000
95	-0.036 -0.123	115	+0.11 -0.11	12.0	13.0	4603100
100	-0.036 -0.123	115	+0.11 -0.11	8.9	10.0	4607100
100	-0.036 -0.123	120	+0.11 -0.11	11.0	12.5	4184901‡
100	-0.036 -0.123	120	+0.11 -0.11	12.0	13.0	4603200
105	-0.036 -0.123	125	+0.13 -0.13	11.4	12.5	4185001‡
105	-0.036 -0.123	125	+0.13 -0.13	15.0	17.0	4603300
110	-0.036 -0.123	130	+0.13 -0.13	11.0	12.5	4185101‡
110	-0.036 -0.123	130	+0.13 -0.13	15.0	17.0	4603400
112	-0.036 -0.123	125	+0.13 -0.13	8.9	10.0	4607200
115	-0.036 -0.123	135	+0.13 -0.13	15.0	17.0	4608100
120	-0.036 -0.123	140	+0.13 -0.13	14.5	16.0	4319600
120	-0.036 -0.123	140	+0.13 -0.13	15.0	17.0	4603500
125	-0.043 -0.143	140	+0.13 -0.13	8.9	10.0	4607300
125	-0.043 -0.143	145	+0.13 -0.13	11.0	12.5	4185201‡
125	-0.043 -0.143	145	+0.13 -0.13	15.0	17.0	4603600
130	-0.043 -0.143	150	+0.13 -0.13	15.0	17.0	4603700
136	-0.043 -0.143	150	+0.13 -0.13	8.5	9.5	4607400

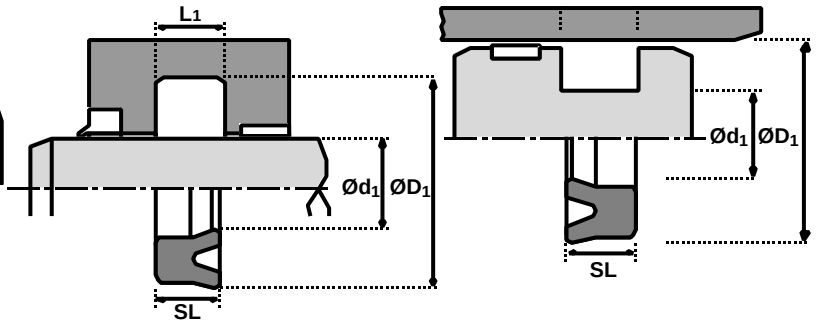

For bore tolerances refer to datasheet.

Rod/Piston seals

Hallite 601

metric

Ød1	TOL f9	ØD1	TOL Js11	SL	L1 +0.25-0	PART No.
140	-0.043 -0.143	154	+0.13 -0.13	9.0	10.0	4607900
140	-0.043 -0.143	155	+0.13 -0.13	8.9	10.0	4607500
140	-0.043 -0.143	160	+0.13 -0.13	15.0	17.0	4603800
145	-0.043 -0.143	160	+0.13 -0.13	8.9	10.0	4607600
145	-0.043 -0.143	165	+0.13 -0.13	15.0	17.0	4608200
150	-0.043 -0.143	165	+0.13 -0.13	8.9	10.0	4607700
150	-0.043 -0.143	170	+0.13 -0.13	15.0	17.0	4603900
155	-0.043 -0.143	180	+0.13 -0.13	15.0	17.0	4608300
160	-0.043 -0.143	175	+0.13 -0.13	9.0	10.0	4608400
160	-0.043 -0.143	185	+0.15 -0.15	15.0	17.0	4608500
165	-0.043 -0.143	180	+0.13 -0.13	9.0	10.0	4608600
165	-0.043 -0.143	183	+0.15 -0.15	10.0	11.0	4607800
165	-0.043 -0.143	190	+0.15 -0.15	15.0	17.0	4608700
170	-0.043 -0.143	195	+0.15 -0.15	15.0	17.0	4608800
175	-0.043 -0.143	200	+0.15 -0.15	15.0	17.0	4608900
180	-0.043 -0.143	200	+0.15 -0.15	12.0	13.0	4609000
180	-0.043 -0.143	205	+0.15 -0.15	15.0	17.0	4609100
190	-0.050 -0.165	210	+0.15 -0.15	12.0	13.0	4609200

Ød1	TOL f9	ØD1	TOL Js11	SL	L1 +0.25-0	PART No.
190	-0.050 -0.165	215	+0.15 -0.15	15.0	17.0	4609300
200	-0.050 -0.165	220	+0.15 -0.15	12.0	13.0	4609400
200	-0.050 -0.165	225	+0.15 -0.15	15.0	17.0	4609500
210	-0.050 -0.165	235	+0.15 -0.15	18.0	20.0	4609600
220	-0.050 -0.165	240	+0.15 -0.15	12.0	13.0	4609700
220	-0.050 -0.165	250	+0.15 -0.15	17.0	19.2	4426600
230	-0.050 -0.165	250	+0.15 -0.15	12.0	13.0	4609800
240	-0.050 -0.165	260	+0.16 -0.16	12.0	13.0	4621000
240	-0.050 -0.165	265	+0.16 -0.16	18.0	20.0	4609900
250	-0.050 -0.165	275	+0.15 -0.15	18.0	20.0	4610000
260	-0.056 -0.186	290	+0.16 -0.16	18.0	20.0	4620100
265	-0.056 -0.186	295	+0.16 -0.16	18.0	20.0	4620200
270	-0.056 -0.186	300	+0.16 -0.16	18.0	20.0	4620300
280	-0.056 -0.186	310	+0.16 -0.16	18.0	20.0	4620400
290	-0.056 -0.186	320	+0.18 -0.18	18.0	20.0	4620500
300	-0.056 -0.186	330	+0.18 -0.18	18.0	20.0	4620600
375	-0.062 -0.212	405	+0.18 -0.18	22.0	24.0	4620700
400	-0.062 -0.212	425	+0.20 -0.20	25.0	27.0	4620800
450	-0.068 -0.223	485	+0.20 -0.20	25.0	27.0	4620900

Rod/Piston seals

Hallite 601

inch

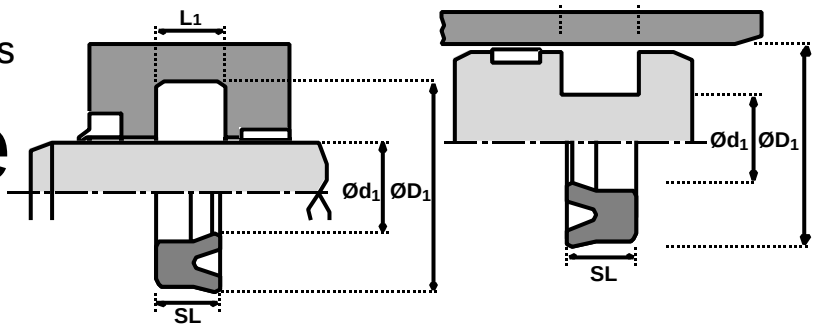

For bore tolerances refer to datasheet.

Ød1	TOL f9	ØD1	TOL Js11	SL	L1 +0.010 -0	PART No.
0.500	-0.0006 -0.0023	0.750	+0.003 -0.003	0.250	0.275	4566500
0.500	-0.0006 -0.0023	0.875	+0.003 -0.003	0.197	0.218	4300000
0.500	-0.0006 -0.0023	1.000	+0.003 -0.003	0.250	0.275	4110201
0.625	-0.0006 -0.0023	1.000	+0.003 -0.003	0.190	0.218	4298300
0.625	-0.0006 -0.0023	1.125	+0.003 -0.003	0.250	0.275	4509101
0.750	-0.0008 -0.0028	1.250	+0.003 -0.003	0.250	0.275	4102901
0.875	-0.0008 -0.0028	1.375	+0.003 -0.003	0.250	0.275	4507101
1.000	-0.0008 -0.0028	1.500	+0.003 -0.003	0.250	0.275	4111101
1.250	-0.0010 -0.0034	1.750	+0.003 -0.003	0.250	0.275	4502701
1.250	-0.0010 -0.0034	1.750	+0.003 -0.003	0.375	0.413	4107001
1.375	-0.0010 -0.0034	1.750	+0.003 -0.003	0.375	0.413	4353400
1.375	-0.0010 -0.0034	2.000	+0.004 -0.004	0.266	0.312	4236201
1.500	-0.0010 -0.0034	2.000	+0.004 -0.004	0.250	0.275	4111001
1.750	-0.0010 -0.0034	2.250	+0.004 -0.004	0.250	0.275	4502601
1.750	-0.0010 -0.0034	2.250	+0.004 -0.004	0.375	0.413	4140901
1.750	-0.0010 -0.0034	2.375	+0.004 -0.004	0.266	0.312	4236301
1.750	-0.0010 -0.0034	2.375	+0.004 -0.004	0.562	0.619	4250901
2.000	-0.0012 -0.0041	2.375	+0.004 -0.004	0.250	0.275	4508301
2.000	-0.0012 -0.0041	2.375	+0.004 -0.004	0.312	0.344	4509201
2.000	-0.0012 -0.0041	2.500	+0.004 -0.004	0.375	0.413	4353500
2.000	-0.0012 -0.0041	2.625	+0.004 -0.004	0.500	0.550	4225101

Ød1	TOL f9	ØD1	TOL Js11	SL	L1 +0.010 -0	PART No.
2.000	-0.0012 -0.0041	2.625	+0.004 -0.004	0.562	0.619	4159801
2.125	-0.0012 -0.0041	2.500	+0.004 -0.004	0.250	0.275	4508201
2.125	-0.0012 -0.0041	2.625	+0.004 -0.004	0.375	0.413	4156101
2.250	-0.0012 -0.0041	2.750	+0.004 -0.004	0.375	0.413	4128701
2.375	-0.0012 -0.0041	3.000	+0.004 -0.004	0.312	0.344	4107201
2.500	-0.0012 -0.0041	3.000	+0.004 -0.004	0.375	0.413	4119501
2.500	-0.0012 -0.0041	3.125	+0.004 -0.004	0.312	0.344	4124401
2.625	-0.0012 -0.0041	3.125	+0.004 -0.004	0.375	0.413	4224701
2.750	-0.0012 -0.0041	3.375	+0.004 -0.004	0.562	0.619	4250701
2.875	-0.0012 -0.0041	3.500	+0.004 -0.004	0.325	0.360	4129701
3.000	-0.0012 -0.0041	3.625	+0.004 -0.004	0.562	0.619	4160001
3.750	-0.0014 -0.0048	4.500	+0.004 -0.004	0.375	0.413	4119201
4.000	-0.0014 -0.0048	4.500	+0.004 -0.004	0.511	0.562	4373400
4.000	-0.0014 -0.0048	4.750	+0.004 -0.004	0.375	0.413	4120501
4.000	-0.0014 -0.0048	4.750	+0.005 -0.005	0.536	0.600	4422500
4.500	-0.0014 -0.0048	5.000	+0.005 -0.005	0.375	0.413	4129801
4.750	-0.0017 -0.0056	5.500	+0.005 -0.005	0.360	0.437	4154701
5.000	-0.0017 -0.0056	5.750	+0.005 -0.005	0.482	0.539	4224801
5.500	-0.0017 -0.0056	6.250	+0.005 -0.005	0.375	0.413	4119301
5.750	-0.0017 -0.0056	6.500	+0.005 -0.005	0.375	0.413	4135301
7.000	-0.0017 -0.0056	8.000	+0.006 -0.006	0.500	0.550	4124901

Rod Seals

Hallite

605

TECHNICAL DETAILS

METRIC ○ — INCH ●

OPERATING CONDITIONS

MAXIMUM SPEED	1.0 m/sec	3.0 ft/sec
TEMPERATURE RANGE	-45°C + 110°C	-50°F + 230°F
MAXIMUM PRESSURE	400 bar	6000 p.s.i.

MAXIMUM EXTRUSION GAP

Figures show the maximum permissible gap all on one side using minimum rod Ø and maximum clearance Ø.

PRESSURE bar	160	250	400
MAXIMUM GAP mm	0.6	0.5	0.4
PRESSURE p.s.i.	2400	3750	6000
MAXIMUM GAP in	0.024	0.020	0.016

SURFACE ROUGHNESS

	µmRa	µmRt	µinCLA	µinRMS
DYNAMIC SEALING FACE $Ød_1$	0.1 ↔ 0.4	4 max	4 ↔ 16	5 ↔ 18
STATIC SEALING FACE $ØD_1$	1.6 max	10 max	63 max	70 max
STATIC HOUSING FACES L_1	3.2 max	16 max	125 max	140 max

CHAMFERS & RADII

GROOVE SECTION ≤ S mm	4.0	5.0	7.5	10.0	12.5	15.0
MIN CHAMFER C mm	3.0	3.5	5.0	6.5	7.0	8.0
MAX FILLET RAD r_1 mm	0.2	0.4	0.8	0.8	1.2	1.6
MAX FILLET RAD r_2 mm	0.4	0.8	1.2	1.2	1.6	2.4
GROOVE SECTION ≤ S in	0.125	0.187	0.250	0.312	0.375	0.500
MIN CHAMFER C in	0.093	0.093	0.125	0.156	0.187	0.217
MAX FILLET RAD r_1 in	0.008	0.008	0.016	0.032	0.032	0.032
MAX FILLET RAD r_2 in	0.016	0.016	0.032	0.047	0.047	0.047

TOLERANCES

$Ød_1$	$ØD_1$	L_1 mm	L_1 in
f9	Js11	+0.25 -0	+0.010 -0

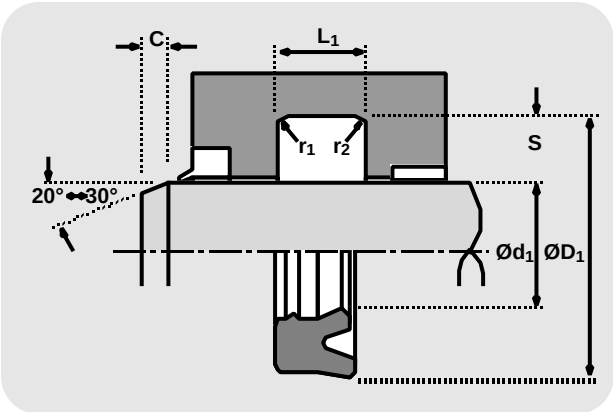

NB: Part numbers commencing 46 . . . . . or suffixed by ‡†· are designed to suit popular Asian housings.

Part numbers suffixed by "‡" indicate housing sizes to meet ISO5597.

DESIGN

The Hallite 605 is an asymmetric seal offering superlative dry rod sealing for light and medium duty applications.

The 605 has become an industry standard seal worldwide owing to its twin lip profile and consistent performance.

Manufactured in Hythane® - 181, the Hallite 605 is an extremely flexible seal making installation very easy.

The ranges cover most standard housings used in Europe, North America and Asia.

FEATURES

- TWIN LIP DESIGN OFFERING:
  LOWER FRICTION,
  IMPROVED SEALING,
  PRIMARY LIP PROTECTION,
  INCREASED SEAL STABILITY.
- EASY INSTALLATION

Rod seals

Hallite 605

metric

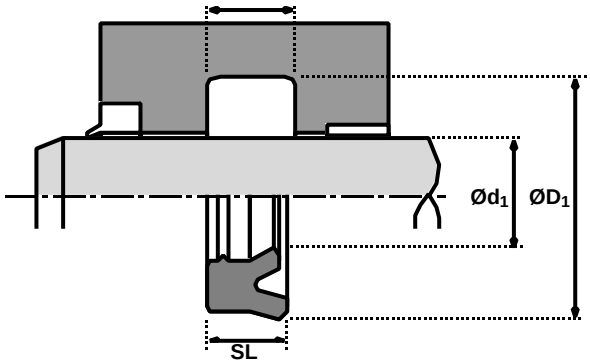

Ød1	TOL f9	ØD1	TOL Js11	SL	L1 +0.25 -0	PART No.
6	-0.016 -0.059	16	+0.06 -0.06	7.0	8.0	4580600
8	-0.016 -0.059	18	+0.06 -0.06	7.0	8.0	4580500
10	-0.016 -0.059	15	+0.06 -0.06	3.6	4.0	4402300
12	-0.016 -0.059	18	+0.06 -0.06	4.0	4.5	4578000
12	-0.016 -0.059	18	+0.06 -0.06	5.7	6.3	4314900
12	-0.016 -0.059	19	+0.07 -0.07	4.5	5.0	4341600
12	-0.016 -0.059	19	+0.07 -0.07	5.1	5.6	4710000
12	-0.016 -0.059	20	+0.07 -0.07	5.7	6.3	4310900‡
12	-0.016 -0.059	22	+0.07 -0.07	7.7	9.0	4315000
12.7	-0.016 -0.059	18	+0.06 -0.06	5.5	6.0	4370400
13	-0.016 -0.059	20	+0.07 -0.07	4.5	5.0	4351600
14	-0.016 -0.059	21	+0.07 -0.07	5.1	5.6	4710100
14	-0.016 -0.059	22	+0.07 -0.07	5.7	6.3	4311000‡
14	-0.016 -0.059	24	+0.07 -0.07	7.3	8.0	4310000‡
15.37	-0.016 -0.059	25.5	+0.07 -0.07	6.35	7.4	4333800
16	-0.016 -0.059	22	+0.07 -0.07	4.5	5.0	4341700
16	-0.016 -0.059	22	+0.07 -0.07	5.0	6.0	4314100
16	-0.016 -0.059	24	+0.07 -0.07	5.8	6.3	4295200‡
16	-0.016 -0.059	26	+0.07 -0.07	7.7	9.0	4311100
18	-0.016 -0.059	24	+0.07 -0.07	4.5	5.0	4712000
18	-0.016 -0.059	25	+0.07 -0.07	5.0	6.0	4314200
18	-0.016 -0.059	26	+0.07 -0.07	5.0	5.7	4611000
18	-0.016 -0.059	26	+0.07 -0.07	5.7	6.3	4311200‡

Ød1	TOL f9	ØD1	TOL Js11	SL	L1 +0.25 -0	PART No.
18	-0.016 -0.059	26	+0.07 -0.07	6.0	7.0	4333900
18	-0.016 -0.059	28	+0.07 -0.07	7.7	9.0	4305100
20	-0.020 -0.072	25	+0.07 -0.07	3.2	3.5	4332100
20	-0.020 -0.072	26	+0.07 -0.07	5.0	5.5	4315100
20	-0.020 -0.072	27	+0.07 -0.07	6.1	6.7	4702900
20	-0.020 -0.072	28	+0.07 -0.07	5.0	5.7	4611100
20	-0.020 -0.072	28	+0.07 -0.07	5.7	6.3	4362100‡
20	-0.020 -0.072	30	+0.07 -0.07	6.0	7.0	4611200
20	-0.020 -0.072	30	+0.07 -0.07	7.7	9.0	4305200
20	-0.020 -0.072	30	+0.07 -0.07	10.0	11.0	4310300
22	-0.020 -0.072	30	+0.07 -0.07	5.7	6.3	4305300‡
22	-0.020 -0.072	30	+0.07 -0.07	7.3	8.0	4356800
22	-0.020 -0.072	32	+0.08 -0.08	7.3	8.0	4310800‡
22	-0.020 -0.072	32	+0.08 -0.08	10.0	11.0	4311300
22.4	-0.020 -0.072	30	+0.08 -0.08	5.0	5.7	4611300
22.4	-0.020 -0.072	30	+0.08 -0.08	8.0	9.0	4616600
25	-0.020 -0.072	33	+0.08 -0.08	5.0	5.7	4610100
25	-0.020 -0.072	33	+0.08 -0.08	5.7	6.3	4305400‡
25	-0.020 -0.072	33	+0.08 -0.08	6.8	7.5	4333500
25	-0.020 -0.072	33	+0.08 -0.08	10.0	11.0	4315200
25	-0.020 -0.072	35	+0.08 -0.08	7.3	8.0	4512000‡
25	-0.020 -0.072	35	+0.08 -0.08	7.7	9.0	4311400
25	-0.020 -0.072	35	+0.08 -0.08	10.0	11.0	4310500

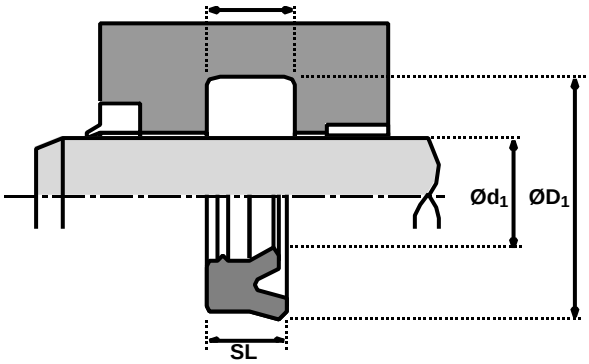

Rod seals

Hallite 605

metric

Ød1	TOL f9	ØD1	TOL Js11	SL	L1 +0.25 -0	PART No.
25	-0.020 -0.072	37	+0.08 -0.08	10.0	11.0	4379900
25	-0.020 -0.072	40	+0.08 -0.08	10.0	11.0	4322900
26	-0.020 -0.072	36	+0.08 -0.08	7.0	8.0	4459400
28	-0.020 -0.072	35.5	+0.08 -0.08	5.0	5.7	4611400
28	-0.020 -0.072	36	+0.08 -0.08	5.7	6.3	4703000
28	-0.020 -0.072	38	+0.08 -0.08	7.3	8.0	4305500‡
28	-0.020 -0.072	43	+0.08 -0.08	11.4	12.5	4399000‡
30	-0.020 -0.072	38	+0.08 -0.08	5.7	6.3	4704500
30	-0.020 -0.072	38	+0.08 -0.08	6.3	7.0	4402700
30	-0.020 -0.072	40	+0.08 -0.08	6.0	7.0	4610200
30	-0.020 -0.072	40	+0.08 -0.08	7.0	7.7	4703100
30	-0.020 -0.072	40	+0.08 -0.08	10.0	11.0	4304600
30	-0.020 -0.072	42	+0.08 -0.08	10.9	12.0	4383100
30	-0.020 -0.072	50	+0.08 -0.08	10.0	11.0	4328500
32	-0.025 -0.087	40	+0.08 -0.08	6.0	7.0	4310700
32	-0.025 -0.087	40	+0.08 -0.08	6.7	7.7	4334000
32	-0.025 -0.087	40	+0.08 -0.08	7.7	9.0	4315300
32	-0.025 -0.087	41.5	+0.08 -0.08	7.9	8.9	4334100
32	-0.025 -0.087	42	+0.08 -0.08	5.7	6.3	4360100‡
32	-0.025 -0.087	42	+0.08 -0.08	6.0	7.0	4616100
32	-0.025 -0.087	42	+0.08 -0.08	7.3	8.0	4374200‡
32	-0.025 -0.087	42	+0.08 -0.08	10.0	11.0	4305600
32	-0.025 -0.087	45	+0.08 -0.08	10.0	11.0	4597700

Ød1	TOL f9	ØD1	TOL Js11	SL	L1 +0.25 -0	PART No.
32	-0.025 -0.087	47	+0.08 -0.08	9.1	10.0	4329600
32	-0.025 -0.087	47	+0.08 -0.08	10.0	11.0	4338900
32	-0.025 -0.087	48	+0.08 -0.08	10.0	11.0	4492500
35	-0.025 -0.087	43	+0.08 -0.08	5.7	6.3	4703200
35	-0.025 -0.087	43	+0.08 -0.08	6.3	7.0	4402800
35	-0.025 -0.087	43	+0.08 -0.08	8.2	9.0	4309000
35	-0.025 -0.087	45	+0.08 -0.08	6.0	7.0	4611500
35	-0.025 -0.087	45	+0.08 -0.08	7.7	9.0	4314300
35	-0.025 -0.087	45	+0.08 -0.08	10.0	11.0	4305700
35	-0.025 -0.087	50	+0.08 -0.08	9.0	10.0	4611600
35	-0.025 -0.087	50	+0.08 -0.08	10.0	11.0	4322500
36	-0.025 -0.087	44	+0.08 -0.08	6.4	7.5	4373900
36	-0.025 -0.087	44	+0.08 -0.08	8.2	9.0	4395000
36	-0.025 -0.087	46	+0.08 -0.08	5.7	6.3	4372100‡
36	-0.025 -0.087	46	+0.08 -0.08	7.3	8.0	4304900‡
36	-0.025 -0.087	46	+0.08 -0.08	10.0	11.0	4305000
38	-0.025 -0.087	48	+0.08 -0.08	10.0	11.0	4515500
38	-0.025 -0.087	50	+0.08 -0.08	10.0	11.0	4586300
38	-0.025 -0.087	53	+0.08 -0.08	10.0	11.0	4480900
40	-0.025 -0.087	48	+0.08 -0.08	5.7	6.3	4703300
40	-0.025 -0.087	48	+0.08 -0.08	8.2	9.0	4396800
40	-0.025 -0.087	49.5	+0.08 -0.08	9.5	10.5	4334200
40	-0.025 -0.087	50	+0.08 -0.08	6.0	7.0	4610300

Rod seals

Hallite 605

metric

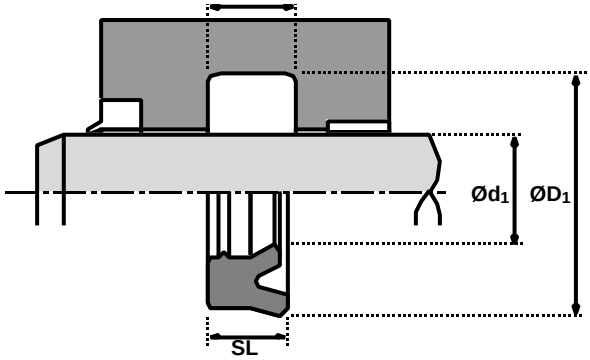

Ød1	TOL f9	ØD1	TOL Js11	SL	L1 +0.25 -0	PART No.
40	-0.025 -0.087	50	+0.08 -0.08	7.3	8.0	4311600‡
40	-0.025 -0.087	50	+0.08 -0.08	10.0	11.0	4293800
40	-0.025 -0.087	52	+0.10 -0.10	10.9	12.0	4381800
40	-0.025 -0.087	55	+0.10 -0.10	7.3	8.0	4703400
40	-0.025 -0.087	55	+0.10 -0.10	9.0	10.0	4611700
40	-0.025 -0.087	55	+0.10 -0.10	10.0	11.0	4328300
42	-0.025 -0.087	50	+0.08 -0.08	7.5	8.0	4373800
42	-0.025 -0.087	52	+0.08 -0.08	10.0	11.0	4338200
45	-0.025 -0.087	53	+0.10 -0.10	8.1	9.0	4402900
45	-0.025 -0.087	53	+0.10 -0.10	11.8	13.0	4315600
45	-0.025 -0.087	55	+0.10 -0.10	5.6	6.3	4479700‡
45	-0.025 -0.087	55	+0.10 -0.10	6.0	7.0	4610400
45	-0.025 -0.087	55	+0.10 -0.10	7.3	8.0	4305900‡
45	-0.025 -0.087	55	+0.10 -0.10	10.0	11.0	4302600
45	-0.025 -0.087	57.7	+0.10 -0.10	9.5	10.5	4322800
45	-0.025 -0.087	60	+0.10 -0.10	10.0	11.0	4315400
45	-0.025 -0.087	65	+0.10 -0.10	10.0	11.0	4315500
48	-0.025 -0.087	60	+0.10 -0.10	10.0	11.0	4432600
50	-0.025 -0.087	57	+0.10 -0.10	9.0	10.0	4538600
50	-0.025 -0.087	60	+0.10 -0.10	6.0	7.0	4611800
50	-0.025 -0.087	60	+0.10 -0.10	7.3	8.0	4306000‡
50	-0.025 -0.087	60	+0.10 -0.10	10.0	11.0	4304500
50	-0.025 -0.087	60	+0.10 -0.10	11.8	13.0	4314400

Ød1	TOL f9	ØD1	TOL Js11	SL	L1 +0.25 -0	PART No.
50	-0.025 -0.087	62.7	+0.10 -0.10	9.5	10.5	4334400
50	-0.025 -0.087	65	+0.10 -0.10	9.0	10.0	4611900
50	-0.025 -0.087	65	+0.10 -0.10	9.5	l0.5	4344000
50	-0.025 -0.087	65	+0.10 -0.10	10.0	11.0	4617000
50	-0.025 -0.087	65	+0.10 -0.10	10.9	12.0	4291700
50	-0.025 -0.087	65	+0.10 -0.10	14.5	16.0	4381900
50	-0.025 -0.087	70	+0.10 -0.10	12.0	13.0	4612000
53	-0.030 -0.104	65	+0.10 -0.10	9.0	10.0	4371700
55	-0.030 -0.104	65	+0.10 -0.10	6.0	7.0	4615600
55	-0.030 -0.104	65	+0.10 -0.10	7.3	8.0	4703500
55	-0.030 -0.104	65	+0.10 -0.10	8.2	9.0	4360400
55	-0.030 -0.104	65	+0.10 -0.10	10.0	11.0	4306100
55	-0.030 -0.104	65	+0.10 -0.10	11.8	13.0	4323400
55	-0.030 -0.104	68	+0.10 -0.10	10.0	11.0	4593800
55	-0.030 -0.104	70	+0.10 -0.10	9.0	10.0	4612100
55	-0.030 -0.104	70	+0.10 -0.10	11.8	13.0	4319200
55	-0.030 -0.104	75	+0.10 -0.10	12.0	13.0	4612200
56	-0.030 -0.104	66	+0.10 -0.10	10.0	11.0	4311800
56	-0.030 -0.104	71	+0.10 -0.10	10.0	11.0	4311900
56	-0.030 -0.104	71	+0.10 -0.10	11.4	12.5	4306200‡
60	-0.030 -0.104	68	+0.10 -0.10	11.0	12.5	4538000
60	-0.030 -0.104	70	+0.10 -0.10	6.0	7.0	4610500
60	-0.030 -0.104	70	+0.10 -0.10	7.3	8.0	4703600

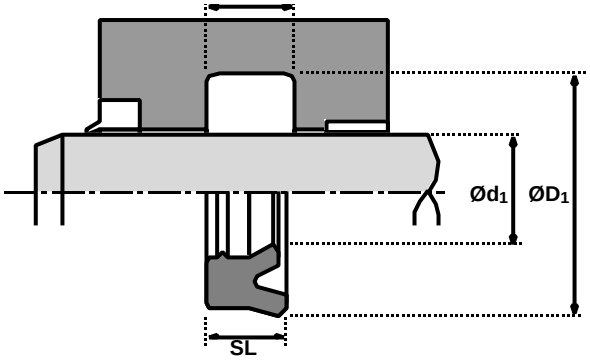

Rod seals

Hallite 605

metric

Ød1	TOL f9	ØD1	TOL Js11	SL	L1 +0.25 -0	PART No.
60	-0.030 -0.104	70	+0.10 -0.10	10.0	11.0	4310600
60	-0.030 -0.104	70	+0.10 -0.10	11.8	13.0	4306300
60	-0.030 -0.104	71	+0.10 -0.10	7.0	8.0	4615700
60	-0.030 -0.104	72	+0.10 -0.10	10.0	11.0	4323500
60	-0.030 -0.104	73	+0.10 -0.10	10.0	11.0	4593900
60	-0.030 -0.104	75	+0.10 -0.10	9.0	10.0	4612300
60	-0.030 -0.104	75	+0.10 -0.10	10.0	11.0	4378700
60	-0.030 -0.104	75	+0.10 -0.10	11.8	13.0	4306400
60	-0.030 -0.104	75	+0.10 -0.10	20.5	22.5	4391800
60	-0.030 -0.104	80	+0.10 -0.10	11.4	12.5	4514300
60	-0.030 -0.104	80	+0.10 -0.10	12.0	13.0	4612400
63	-0.030 -0.104	73	+0.10 -0.10	6.0	7.0	4612500
63	-0.030 -0.104	73	+0.10 -0.10	11.8	13.0	4312000
63	-0.030 -0.104	78	+0.10 -0.10	10.0	11.0	4312100
63	-0.030 -0.104	78	+0.10 -0.10	11.4	12.5	4306500‡
65	-0.030 -0.104	75	+0.10 -0.10	6.0	7.0	4615900
65	-0.030 -0.104	75	+0.10 -0.10	7.7	9.0	4314500
65	-0.030 -0.104	75	+0.10 -0.10	11.8	13.0	4306600
65	-0.030 -0.104	77	+0.10 -0.10	9.0	10.0	4703700
65	-0.030 -0.104	77.7	+0.10 -0.10	9.5	10.5	4334500
65	-0.030 -0.104	78	+0.10 -0.10	10.0	11.0	4616200
65	-0.030 -0.104	80	+0.10 -0.10	9.0	10.0	4612600
65	-0.030 -0.104	80	+0.10 -0.10	11.8	13.0	4312200

Ød1	TOL f9	ØD1	TOL Js11	SL	L1 +0.25 -0	PART No.
65	-0.030 -0.104	85	+0.10 -0.10	12.0	13.0	4612700
67	-0.030 -0.104	77	+0.10 -0.10	6.0	7.0	4612800
70	-0.030 -0.104	80	+0.10 -0.10	6.0	7.0	4615800
70	-0.030 -0.104	80	+0.10 -0.10	11.8	13.0	4312300
70	-0.030 -0.104	82	+0.11 -0.11	8.7	9.6	4494700
70	-0.030 -0.104	82	+0.11 -0.11	10.0	11.0	4323600
70	-0.030 -0.104	83	+0.11 -0.11	10.0	11.0	4616400
70	-0.030 -0.104	85	+0.11 -0.11	9.0	10.0	4612900
70	-0.030 -0.104	85	+0.11 -0.11	10.0	11.0	4302700
70	-0.030 -0.104	85	+0.11 -0.11	11.4	12.5	4301200‡
70	-0.030 -0.104	85	+0.11 -0.11	20.5	22.5	4401400
70	-0.030 -0.104	90	+0.11 -0.11	12.0	13.0	4613000
75	-0.030 -0.104	83	+0.11 -0.11	11.4	12.5	4706300
75	-0.030 -0.104	85	+0.11 -0.11	6.0	7.0	4616800
75	-0.030 -0.104	85	+0.11 -0.11	11.8	13.0	4312400
75	-0.030 -0.104	88	+0.11 -0.11	10.0	11.0	4616300
75	-0.030 -0.104	90	+0.11 -0.11	9.0	10.0	4613100
75	-0.030 -0.104	95	+0.11 -0.11	12.0	13.0	4613200
78	-0.030 -0.104	86	+0.11 -0.11	9.0	10.0	4538700
80	-0.030 -0.104	90	+0.11 -0.11	6.0	7.0	4616000
80	-0.030 -0.104	90	+0.11 -0.11	10.0	11.0	4390400
80	-0.030 -0.104	90	+0.11 -0.11	11.8	13.0	4312500
80	-0.030 -0.104	92	+0.11 -0.11	8.7	9.6	4494800

Rod seals

Hallite 605

metric

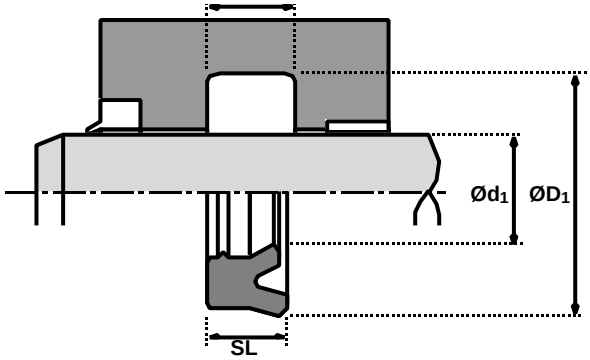

Ød1	TOL f9	ØD1	TOL Js11	SL	L1 +0.25 -0	PART No.
80	-0.030 -0.104	93	+0.11 -0.11	10.0	11.0	4615200
80	-0.030 -0.104	95	+0.11 -0.11	9.0	10.0	4613300
80	-0.030 -0.104	95	+0.11 -0.11	10.0	11.0	4383500
80	-0.030 -0.104	95	+0.11 -0.11	11.8	13.0	4306700
80	-0.030 -0.104	100	+0.11 -0.11	12.0	13.0	4613400
80	-0.030 -0.104	100	+0.11 -0.11	14.5	16.0	4382800‡
80	-0.030 -0.104	110	+0.11 -0.11	16.4	18.0	4342900
85	-0.036 -0.123	93	+0.11 -0.11	10.0	11.0	4392700
85	-0.036 -0.123	93	+0.11 -0.11	11.0	12.5	4537900
85	-0.036 -0.123	100	+0.11 -0.11	9.0	10.0	4610600
85	-0.036 -0.123	100	+0.11 -0.11	10.0	11.0	4615300
85	-0.036 -0.123	100	+0.11 -0.11	11.8	13.0	4306800
85	-0.036 -0.123	105	+0.11 -0.11	12.0	13.0	4613500
90	-0.036 -0.123	98	+0.11 -0.11	11.4	12.5	4706400
90	-0.036 -0.123	100	+0.11 -0.11	6.8	7.5	4493500‡
90	-0.036 -0.123	100	+0.11 -0.11	9.0	10.0	4366900
90	-0.036 -0.123	100	+0.11 -0.11	11.8	13.0	4314600
90	-0.036 -0.123	102	+0.11 -0.11	8.7	9.6	4333000
90	-0.036 -0.123	105	+0.11 -0.11	9.0	10.0	4613600
90	-0.036 -0.123	105	+0.11 -0.11	10.0	11.0	4615400
90	-0.036 -0.123	105	+0.11 -0.11	11.4	12.5	4306900‡
90	-0.036 -0.123	110	+0.11 -0.11	12.0	13.0	4613700
95	-0.036 -0.123	110	+0.11 -0.11	9.0	10.0	4610700

Ød1	TOL f9	ØD1	TOL Js11	SL	L1 +0.25 -0	PART No.
95	-0.036 -0.123	110	+0.11 -0.11	10.0	11.0	4615500
95	-0.036 -0.123	115	+0.11 -0.11	12.0	13.0	4613800
96	-0.036 -0.123	104	+0.11 -0.11	10.9	12.0	4380300
100	-0.036 -0.123	110	+0.11 -0.11	10.9	12.0	4461700
100	-0.036 -0.123	115	+0.11 -0.11	9.0	10.0	4610800
100	-0.036 -0.123	115	+0.11 -0.11	10.0	11.0	4617100
100	-0.036 -0.123	115	+0.11 -0.11	11.8	13.0	4312600
100	-0.036 -0.123	120	+0.11 -0.11	11.8	13.0	4312700†
100	-0.036 -0.123	120	+0.11 -0.11	14.5	16.0	4307000‡
105	-0.036 -0.123	113	+0.11 -0.11	10.0	11.0	4392800
105	-0.036 -0.123	115	+0.11 -0.11	13.2	14.5	4390500
105	-0.036 -0.123	120	+0.11 -0.11	10.0	11.0	4617200
105	-0.036 -0.123	120	+0.11 -0.11	14.5	16.0	4379500
108	-0.036 -0.123	123	+0.13 -0.13	10.9	12.0	4329100
110	-0.036 -0.123	125	+0.13 -0.13	9.0	10.0	4459700†
110	-0.036 -0.123	125	+0.13 -0.13	11.0	12.0	4537800
110	-0.036 -0.123	125	+0.13 -0.13	14.5	16.0	4481600
110	-0.036 -0.123	130	+0.13 -0.13	11.8	13.0	4312800†
110	-0.036 -0.123	130	+0.13 -0.13	14.5	16.0	4307100‡
110	-0.036 -0.123	135	+0.13 -0.13	14.5	16.0	4343000
112	-0.036 -0.123	125	+0.13 -0.13	9.0	10.0	4610900
115	-0.036 -0.123	130	+0.13 -0.13	9.0	10.0	4459800
115	-0.036 -0.123	130	+0.13 -0.13	10.9	12.0	4434600

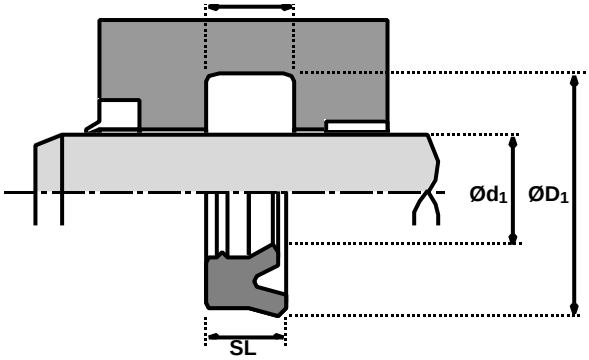

Rod seals

Hallite 605

metric

Ød1	TOL f9	ØD1	TOL Js11	SL	L1 +0.25 -0	PART No.
115	-0.036 -0.123	130	+0.13 -0.13	14.5	16.0	4342600
120	-0.036 -0.123	128	+0.13 -0.13	11.4	12.5	4706500
120	-0.036 -0.123	130	+0.13 -0.13	10.9	12.0	4461800
120	-0.036 -0.123	135	+0.13 -0.13	9.0	10.0	4614000
120	-0.036 -0.123	140	+0.13 -0.13	12.0	13.0	4614100
120	-0.036 -0.123	140	+0.13 -0.13	14.5	16.0	4312900
125	-0.043 -0.143	133	+0.13 -0.13	10.0	11.0	4392900
125	-0.043 -0.143	140	+0.13 -0.13	9.0	10.0	4614200
125	-0.043 -0.143	145	+0.13 -0.13	12.0	13.0	4614300
125	-0.043 -0.143	145	+0.13 -0.13	14.5	16.0	4307300‡
125	-0.043 -0.143	150	+0.13 -0.13	12.5	14.0	4367000
130	-0.043 -0.143	140	+0.13 -0.13	14.5	16.0	4390600
130	-0.043 -0.143	145	+0.13 -0.13	9.0	10.0	4614400
130	-0.043 -0.143	150	+0.13 -0.13	12.0	13.0	4614500
130	-0.043 -0.143	150	+0.13 -0.13	14.5	16.0	4313000
132.5	-0.043 -0.143	157.5	+0.13 -0.13	13.2	14.5	4329400
135	-0.043 -0.143	150	+0.13 -0.13	11.0	12.5	4537700
140	-0.043 -0.143	150	+0.13 -0.13	10.9	12.0	4461900
140	-0.043 -0.143	155	+0.13 -0.13	9.0	10.0	4614600
140	-0.043 -0.143	155	+0.13 -0.13	11.8	13.0	4555300
140	-0.043 -0.143	160	+0.13 -0.13	11.8	13.0	4313100†
140	-0.043 -0.143	160	+0.13 -0.13	14.5	16.0	4307400‡

Ød1	TOL f9	ØD1	TOL Js11	SL	L1 +0.25 -0	PART No.
150	-0.043 -0.143	160	+0.13 -0.13	11.0	12.0	4595200‡
150	-0.043 -0.143	165	+0.13 -0.13	9.0	10.0	4614700
150	-0.043 -0.143	170	+0.13 -0.13	12.0	13.0	4614800
150	-0.043 -0.143	170	+0.13 -0.13	13.2	14.5	4367100
150	-0.043 -0.143	170	+0.13 -0.13	14.5	16.0	4342800
151	-0.043 -0.143	159	+0.13 -0.13	9.0	10.0	4538800
155	-0.043 -0.143	170	+0.13 -0.13	14.5	16.0	4342700
160	-0.043 -0.143	175	+0.13 -0.13	9.0	10.0	4614900
160	-0.043 -0.143	175	+0.13 -0.13	10.9	12.0	4462000
160	-0.043 -0.143	180	+0.13 -0.13	12.0	13.0	4615000
160	-0.043 -0.143	180	+0.13 -0.13	14.5	16.0	4345000
165	-0.043 -0.143	180	+0.13 -0.13	9.0	10.0	4616500
170	-0.043 -0.143	190	+0.15 -0.15	14.5	16.0	4398800
180	-0.043 -0.143	200	+0.15 -0.15	11.8	13.0	4314700†
180	-0.043 -0.143	200	+0.15 -0.15	14.5	16.0	4560900
185	-0.050 -0.165	200	+0.15 -0.15	10.9	12.0	4462100
200	-0.050 -0.165	220	+0.15 -0.15	12.0	13.0	4615100
200	-0.050 -0.165	220	+0.15 -0.15	14.5	16.0	4380200
205	-0.050 -0.165	220	+0.15 -0.15	12.2	13.5	4522400
220	-0.050 -0.165	240	+0.15 -0.15	14.5	16.0	4555400
330	-0.062 -0.212	350	+0.18 -0.18	18.2	20.0	4587400

Rod seals

Hallite 605

inch

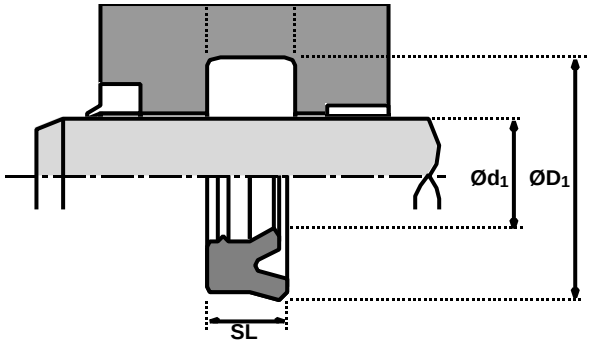

Ød1	TOL f9	ØD1	TOL Js11	SL	L1 +0.25 -0	PART No.
0.375	-0.0005 -0.0019	0.625	+0.002 -0.002	0.198	0.218	4544300
0.375	-0.0005 -0.0019	0.750	+0.003 -0.003	0.312	0.343	4710500
0.500	-0.0006 -0.0023	0.750	+0.003 -0.003	0.187	0.207	4576100
0.562	-0.0006 -0.0023	0.813	+0.003 -0.003	0.187	0.207	4576200
0.625	-0.0006 -0.0023	0.875	+0.003 -0.003	0.187	0.207	4493700
0.625	-0.0006 -0.0023	0.875	+0.003 -0.003	0.241	0.265	4329000
0.625	-0.0006 -0.0023	1.000	+0.003 -0.003	0.281	0.312	4447200
0.687	-0.0006 -0.0023	0.937	+0.003 -0.003	0.187	0.207	4572000
0.750	-0.0008 -0.0028	1.000	+0.003 -0.003	0.125	0.138	4552900
0.750	-0.0008 -0.0028	1.000	+0.003 -0.003	0.187	0.207	4571000
0.750	-0.0008 -0.0028	1.000	+0.003 -0.003	0.250	0.275	4345100
0.750	-0.0008 -0.0028	1.125	+0.003 -0.003	0.312	0.344	4512200
0.812	-0.0008 -0.0028	1.062	+0.003 -0.003	0.250	0.275	4558700
0.812	-0.0008 -0.0028	1.062	+0.003 -0.003	0.187	0.207	4576300
0.875	-0.0008 -0.0028	1.125	+0.003 -0.003	0.187	0.207	4576400
0.875	-0.0008 -0.0028	1.125	+0.003 -0.003	0.250	0.275	4442500
0.875	-0.0008 -0.0028	1.375	+0.003 -0.003	0.341	0.375	4373100
1.000	-0.0008 -0.0028	1.240	+0.003 -0.003	0.187	0.211	4371800
1.000	-0.0008 -0.0028	1.250	+0.003 -0.003	0.187	0.207	4442600
1.000	-0.0008 -0.0028	1.250	+0.003 -0.003	0.250	0.275	4345200
1.000	-0.0008 -0.0028	1.312	+0.003 -0.003	0.219	0.241	4493800
1.000	-0.0008 -0.0028	1.375	+0.003 -0.003	0.250	0.275	4456800
1.000	-0.0008 -0.0028	1.375	+0.003 -0.003	0.312	0.344	4345900
1.000	-0.0008 -0.0028	1.500	+0.003 -0.003	0.255	0.275	4430200

Ød1	TOL f9	ØD1	TOL Js11	SL	L1 +0.25 -0	PART No.
1.000	-0.0008 -0.0028	1.500	+0.003 -0.003	0.341	0.375	4330100
1.000	-0.0008 -0.0028	1.500	+0.003 -0.003	0.375	0.413	4308400
1.062	-0.0008 -0.0028	1.302	+0.003 -0.003	0.187	0.203	4410300
1.062	-0.0008 -0.0028	1.312	+0.003 -0.003	0.250	0.275	4394500
1.125	-0.0008 -0.0028	1.365	+0.003 -0.003	0.192	0.211	4384500
1.125	-0.0008 -0.0028	1.375	+0.003 -0.003	0.187	0.207	4442700
1.125	-0.0008 -0.0028	1.375	+0.003 -0.003	0.250	0.275	4388000
1.125	-0.0008 -0.0028	1.399	+0.003 -0.003	0.187	0.211	4371900
1.125	-0.0008 -0.0028	1.500	+0.003 -0.003	0.312	0.344	4392600
1.125	-0.0008 -0.0028	1.562	+0.003 -0.003	0.325	0.360	4568800
1.125	-0.0008 -0.0028	1.625	+0.003 -0.003	0.250	0.275	4370900
1.125	-0.0008 -0.0028	1.750	+0.003 -0.003	0.397	0.437	4373000
1.187	-0.0008 -0.0028	1.562	+0.003 -0.003	0.250	0.275	4458600
1.250	-0.0010 -0.0034	1.500	+0.003 -0.003	0.250	0.275	4345300
1.250	-0.0010 -0.0034	1.625	+0.003 -0.003	0.187	0.207	4552600
1.250	-0.0010 -0.0034	1.625	+0.003 -0.003	0.227	0.250	4330200
1.250	-0.0010 -0.0034	1.625	+0.003 -0.003	0.250	0.275	4460600
1.250	-0.0010 -0.0034	1.625	+0.003 -0.003	0.312	0.344	4346000
1.250	-0.0010 -0.0034	1.750	+0.003 -0.003	0.250	0.275	4513500
1.250	-0.0010 -0.0034	1.750	+0.003 -0.003	0.375	0.413	4335800
1.250	-0.0010 -0.0034	1.875	+0.003 -0.003	0.397	0.437	4330300
1.375	-0.0010 -0.0034	1.625	+0.003 -0.003	0.250	0.275	4345400
1.375	-0.0010 -0.0034	1.687	+0.003 -0.003	0.219	0.241	4493900
1.375	-0.0010 -0.0034	1.750	+0.003 -0.003	0.187	0.207	4552800

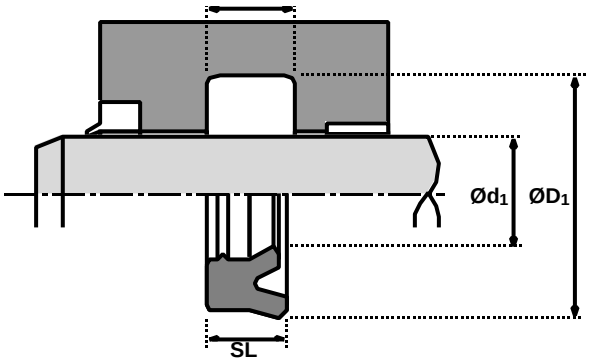

Rod seals

Hallite 605

inch

Ød1	TOL f9	ØD1	TOL Js11	SL	L1 +0.010 -0	PART No.
1.375	-0.0010 -0.0034	1.750	+0.003 -0.003	0.312	0.344	4346100
1.375	-0.0010 -0.0034	1.875	+0.003 -0.003	0.375	0.413	4403100
1.375	-0.0010 -0.0034	2.000	+0.004 -0.004	0.397	0.437	4330400
1.437	-0.0010 -0.0034	1.812	+0.003 -0.003	0.312	0.344	4442800
1.500	-0.0010 -0.0034	1.750	+0.003 -0.003	0.250	0.275	4345500
1.500	-0.0010 -0.0034	1.875	+0.003 -0.003	0.187	0.207	4576600
1.500	-0.0010 -0.0034	1.875	+0.003 -0.003	0.250	0.275	4322100
1.500	-0.0010 -0.0034	1.875	+0.003 -0.003	0.312	0.344	4346200
1.500	-0.0010 -0.0034	1.875	+0.003 -0.003	0.375	0.413	4385400
1.500	-0.0010 -0.0034	2.000	+0.004 -0.004	0.250	0.275	4394400
1.500	-0.0010 -0.0034	2.000	+0.004 -0.004	0.341	0.375	4330500
1.500	-0.0010 -0-0034	2.000	+0.004 -0.004	0.375	0.413	4322200
1.500	-0.0010 -0-0034	2.125	+0.004 -0.004	0.375	0.413	4442900
1.500	-0.0010 -0.0034	2.125	+0.004 -0.004	0.397	0.437	4330600
1.625	-0.0010 -0.0034	1.875	+0.003 -0.003	0.250	0.275	4345600
1.625	-0.0010 -0.0034	2.000	+0.004 -0.004	0.281	0.312	4542800
1.625	-0.0010 -0.0034	2.000	+0.004 -0.004	0.312	0.344	4443000
1.625	-0.0010 -0.0034	2.000	+0.004 -0.004	0.375	0.413	4443100
1.625	-0.0010 -0.0034	2.125	+0.004 -0.004	0.375	0.413	4512100
1.750	-0.0010 -0.0034	2.000	+0.004 -0.004	0.250	0.275	4345700
1.750	-0.0010 -0.0034	2.125	+0.004 -0.004	0.250	0.275	4357200
1.750	-0.0010 -0.0034	2.125	+0.004 -0.004	0.312	0.344	4346300
1.750	-0.0010 -0.0034	2.125	+0.004 -0.004	0.375	0.413	4366800
1.750	-0.0010 -0.0034	2.250	+0.004 -0.004	0.250	0.275	4552700

Ød1	TOL f9	ØD1	TOL Js11	SL	L1 +0.010 -0	PART No.
1.750	-0.0010 -0.0034	2.250	+0.004 -0.004	0.341	0.375	4330700
1.750	-0.0010 -0.0034	2.250	+0.004 -0.004	0.375	0.413	4337000
1.750	-0.0010 -0.0034	2.250	+0.004 -0.004	0.500	0.550	4376800
1.750	-0.0010 -0.0034	2.375	+0.004 -0.004	0.437	0.481	4443200
1.875	-0.0010 -0.0034	2.250	+0.004 -0.004	0.375	0.413	4476200
1.875	-0.0010 -0.0034	2.375	+0.004 -0.004	0.375	0.413	4391200
1.875	-0.0010 -0.0034	2.500	+0.004 -0.004	0.397	0.437	4331500
2.000	-0.0012 -0.0041	2.250	+0.004 -0.004	0.250	0.275	4345800
2.000	-0.0012 -0.0041	2.375	+0.004 -0.004	0.250	0.275	4458700
2.000	-0.0012 -0.0041	2.375	+0.004 -0.004	0.312	0.344	4346400
2.000	-0.0012 -0.0041	2.375	+0.004 -0.004	0.375	0.413	4380100
2.000	-0.0012 -0.0041	2.500	+0.004 -0.004	0.250	0.275	4496900
2.000	-0.0012 -0.0041	2.500	+0.004 -0.004	0.312	0.344	4382900
2.000	-0.0012 -0.0041	2.500	+0.004 -0.004	0.341	0.375	4330900
2.000	-0.0012 -0.0041	2.500	+0.004 -0.004	0.375	0.413	4337100
2.000	-0.0012 -0.0041	2.500	+0.004 -0.004	0.781	0.859	4491400
2.000	-0.0012 -0.0041	2.625	+0.004 -0.004	0.312	0.344	4333100
2.000	-0.0012 -0.0041	2.625	+0.004 -0.004	0.397	0.437	4331000
2.000	-0.0012 -0.0041	2.625	+0.004 -0.004	0.500	0.550	4346500
2.000	-0.0012 -0.0041	2.750	+0.004 -0.004	0.625	0.688	4347300
2.125	-0.0012 -0.0041	2.500	+0.004 -0.004	0.375	0.413	4443300
2.250	-0.0012 -0.0041	2.625	+0.004 -0.004	0.335	0.375	4372200
2.250	-0.0012 -0.0041	2.750	+0.004 -0.004	0.341	0.375	4331100
2.250	-0.0012 -0.0041	2.750	+0.004 -0.004	0.375	0.413	4337200

Rod seals

Hallite
605

inch

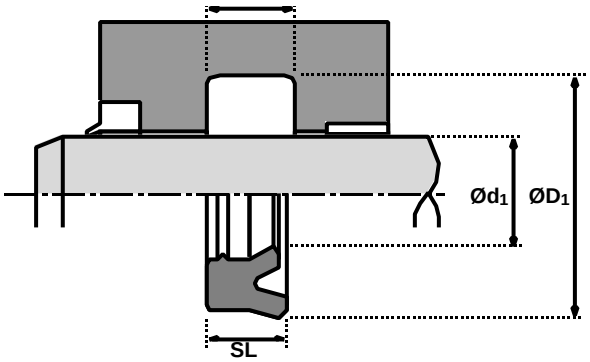

Ød1	TOL f9	ØD1	TOL Js11	SL	L1 +0.25 -0	PART No.
2.250	-0.0012 -0.0041	3.000	+0.004 -0.004	0.511	0.562	4331200
2.375	-0.0012 -0.0041	2.750	+0.004 -0.004	0.375	0.413	4443400
2.375	-0.0012 -0.0041	2.875	+0.004 -0.004	0.375	0.413	4443500
2.500	-0.0012 -0.0041	2.875	+0.004 -0.004	0.312	0.344	4443600
2.500	-0.0012 -0.0041	2.875	+0.004 -0.004	0.375	0.413	4458500
2.500	-0.0012 -0.0041	2.937	+0.004 -0.004	0.284	0.312	4535900
2.500	-0.0012 -0.0041	3.000	+0.004 -0.004	0.250	0.275	4553000
2.500	-0.0012 -0.0041	3.000	+0.004 -0.004	0.284	0.312	4331300
2.500	-0.0012 -0.0041	3.000	+0.004 -0.004	0.375	0.413	4335900
2.500	-0.0012 -0.0041	3.125	+0.004 -0.004	0.500	0.550	4346600
2.500	-0.0012 -0.0041	3.250	+0.004 -0.004	0.625	0.688	4347400
2.625	-0.0012 -0.0041	3.000	+0.004 -0.004	0.375	0.413	4443700
2.625	-0.0012 -0.0041	3.125	+0.004 -0.004	0.500	0.550	4514900
2.625	-0.0012 -0.0041	3.250	+0.004 -0.004	0.625	0.688	4376900
2.750	-0.0012 -0.0041	3.125	+0.004 -0.004	0.375	0.413	4379100
2.750	-0.0012 -0.0041	3.250	+0.004 -0.004	0.375	0.413	4336000
2.750	-0.0012 -0.0041	3.375	+0.004 -0.004	0.375	0.413	4456900
2.750	-0.0012 -0.0041	3.375	+0.004 -0.004	0.500	0.550	4346700
2.750	-0.0012 -0.0041	3.375	+0.004 -0.004	0.805	0.885	4467400
2.750	-0.0012 -0.0041	3.500	+0.004 -0.004	0.625	0.688	4347500
2.875	-0.0012 -0.0041	3.250	+0.004 -0.004	0.375	0.413	4443800
3.000	-0.0012 -0.0041	3.375	+0.004 -0.004	0.375	0.413	4468300
3.000	-0.0012 -0.0041	3.438	+0.004 -0.004	0.281	0.310	4539900
3.000	-0.0012 -0.0041	3.500	+0.004 -0.004	0.375	0.413	4336100

Ød1	TOL f9	ØD1	TOL Js11	SL	L1 +0.25 -0	PART No.
3.000	-0.0012 -0.0041	3.500	+0.004 -0.004	0.625	0.688	4399600
3.000	-0.0012 -0.0041	3.500	+0.004 -0.004	0.781	0.859	4476900
3.000	-0.0012 -0.0041	3.625	+0.004 -0.004	0.500	0.550	4346800
3.000	-0.0012 -0.0041	3.750	+0.004 -0.004	0.625	0.688	4347600
3.125	-0.0012 -0.0041	3.500	+0.004 -0.004	0.625	0.688	4399700
3.250	-0.0014 -0.0048	3.625	+0.004 -0.004	0.375	0.413	4714100
3.250	-0.0014 -0.0048	3.625	+0.004 -0.004	0.562	0.619	4476800
3.250	-0.0014 -0.0048	3.750	+0.004 -0.004	0.375	0.413	4336200
3.250	-0.0014 -0.0048	3.875	+0.004 -0.004	0.500	0.550	4415400
3.375	-0.0014 -0.0048	4.000	+0.004 -0.004	0.594	0.653	4377000
3.500	-0.0014 -0.0048	3.875	+0.004 -0.004	0.375	0.413	4468400
3.500	-0.0014 -0.0048	4.000	+0.004 -0.004	0.312	0.344	4540000
3.500	-0.0014 -0.0048	4.000	+0.004 -0.004	0.375	0.413	4336300
3.500	-0.0014 -0.0048	4.125	+0.004 -0.004	0.500	0.550	4346900
3.500	-0.0014 -0.0048	4.250	+0.004 -0.004	0.625	0.688	4347700
3.625	-0.0014 -0.0048	4.125	+0.004 -0.004	0.375	0.413	4436200
3.750	-0.0014 -0.0048	4.125	+0.004 -0.004	0.375	0.413	4702500
3.750	-0.0014 -0.0048	4.250	+0.004 -0.004	0.375	0.413	4443900
3.750	-0.0014 -0.0048	4.250	+0.004 -0.004	0.500	0.550	4456500
3.750	-0.0014 -0.0048	4.250	+0.004 -0.004	0.562	0.625	4436100
4.000	-0.0014 -0.0048	4.375	+0.004 -0.004	0.375	0.413	4468500
4.000	-0.0014 -0.0048	4.500	+0.004 -0.004	0.312	0.355	4586700
4.000	-0.0014 -0.0048	4.500	+0.004 -0.004	0.375	0.413	4336400
4.000	-0.0014 -0.0048	4.500	+0.004 -0.004	0.562	0.619	4385700

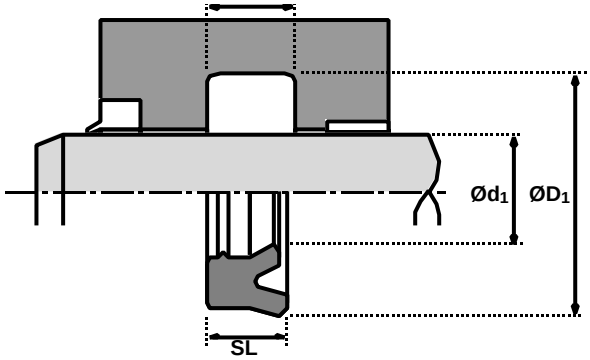

Rod seals

Hallite 605

inch

Ød1	TOL f9	ØD1	TOL Js11	SL	L1 +0.010 -0	PART No.
4.000	-0.0014 -0.0048	4.500	+0.004 -0.004	0.781	0.859	4399800
4.000	-0.0014 -0.0048	4.625	+0.004 -0.004	0.375	0.413	4520100
4.000	-0.0014 -0.0048	4.625	+0.004 -0.004	0.500	0.550	4347000
4.000	-0.0014 -0.0048	4.750	+0.004 -0.004	0.500	0.550	4444000
4.000	-0.0014 -0.0048	4.750	+0.005 -0.005	0.625	0.688	4347800
4.250	-0.0014 -0.0048	5.000	+0.005 -0.005	0.625	0.688	4347900
4.500	-0.0014 -0.0048	5.000	+0.005 -0.005	0.375	0.413	4379200
4.500	-0.0014 -0.0048	5.125	+0.005 -0.005	0.500	0.550	4347100
4.500	-0.0014 -0.0048	5.125	+0.005 -0.005	0.625	0.688	4444100
4.500	-0.0014 -0.0048	5.250	+0.005 -0.005	0.625	0.688	4348000
4.625	-0.0014 -0.0048	5.250	+0.005 -0.005	0.625	0.688	4377100
4.750	-0.0014 -0.0048	5.125	+0.005 -0.005	0.375	0.413	4714200
4.750	-0.0014 -0.0048	5.250	+0.005 -0.005	0.625	0.688	4451100
5.000	-0.0017 -0.0056	5.500	+0.005 -0.005	0.375	0.413	4495000
5.000	-0.0017 -0.0056	5.500	+0.005 -0.005	0.562	0.619	4386100
5.000	-0.0017 -0.0056	5.500	+0.005 -0.005	0.781	0.859	4399900
5.000	-0.0017 -0.0056	5.531	+0.005 -0.005	0.557	0.619	4391400
5.000	-0.0017 -0.0056	5.625	+0.005 -0.005	0.500	0.550	4347200
5.000	-0.0017 -0.0056	5.750	+0.005 -0.005	0.625	0.688	4348100
5.125	-0.0017 -0.0056	5.625	+0.005 -0.005	0.562	0.619	4436000
5.125	-0.0017 -0.0056	6.000	+0.005 -0.005	0.500	0.550	4444200
5.375	-0.0017 -0.0056	5.875	+0.005 -0.005	0.625	0.688	4475800
5.375	-0.0017 -0.0056	6.000	+0.005 -0.005	0.625	0.688	4448300

Ød1	TOL f9	ØD1	TOL Js11	SL	L1 +0.010 -0	PART No.
5.500	-0.0017 -0.0056	6.000	+0.005 -0.005	0.375	0.413	4379300
5.500	-0.0017 -0.0056	6.000	+0.005 -0.005	0.562	0.619	4468600
5.500	-0.0017 -0.0056	6.125	+0.005 -0.005	0.312	0.344	4540100
5.500	-0.0017 -0.0056	6.250	+0.005 -0.005	0.625	0.688	4348200
5.625	-0.0017 -0.0056	6.125	+0.005 -0.005	0.375	0.413	4714300
6.000	-0.0017 -0.0056	6.500	+0.005 -0.005	0.562	0.619	4436500
6.000	-0.0017 -0.0056	6.500	+0.005 -0.005	0.781	0.859	4400000
6.000	-0.0017 -0.0056	6.531	+0.005 -0.005	0.562	0.619	4391000
6.000	-0.0017 -0.0056	6.750	+0.005 -0.005	0.625	0.688	4348300
6.500	-0.0017 -0.0056	7.250	+0.006 -0.006	0.625	0.688	4348400
7.000	-0.0017 -0.0056	7.500	+0.006 -0.006	0.562	0.619	4436600
7.000	-0.0017 -0.0056	7.500	+0.006 -0.006	0.780	0.859	4456600
7.000	-0.0017 -0.0056	7.531	+0.006 -0.006	0.562	0.619	4391100
7.000	-0.0017 -0.0056	7.750	+0.006 -0.006	0.625	0.688	4348500
7.500	-0.0017 -0.0056	8.000	+0.006 -0.006	0.375	0.413	4714400
7.750	-0.0020 -0.0065	8.500	+0.006 -0.006	0.625	0.688	4353900
8.000	-0.0020 -0.0065	8.500	+0.006 -0.006	0.562	0.619	4468700
8.000	-0.0020 -0.0065	8.750	+0.006 -0.006	0.625	0.688	4510500
8.125	-0.0020 -0.0065	8.625	+0.006 -0.006	0.781	0.859	4477000
9.000	-0.0020 -0.0065	9.500	+0.006 -0.006	0.562	0.619	4468800
9.250	-0.0020 -0.0065	10.000	+0.006 -0.006	0.625	0.688	4499300
9.375	-0.0020 -0.0065	9.875	+0.006 -0.006	0.781	0.859	4477100
10.000	-0.0022 -0.0073	10.500	+0.006 -0.006	0.562	0.619	4468900

Notes

Piston seals

Hallite

606

TECHNICAL DETAILS

METRIC ○ INCH ●

OPERATING CONDITIONS

MAXIMUM SPEED	1.0 m/sec	3.0 ft/sec
TEMPERATURE RANGE	-45°C + 110°C	-50°F + 230°F
MAXIMUM PRESSURE	400 bar*	6,000 p.s.i.*

MAXIMUM EXTRUSION GAP

Figures show the maximum permissible gap all on one side using the minimum clearance Ø and maximum bore Ø

PRESSURE bar	160	250	400
MAXIMUM GAP mm	0.6	0.5	0.4
PRESSURE p.s.i.	2400	3750	6000
MAXIMUM GAP in	0.024	0.020	0.016

SURFACE ROUGHNESS

	µmRa	µmRt	µinCLA	µinRMS
DYNAMIC SEALING FACE $ØD_1$	0.1 ↔ 0.4	4 max	4 ↔ 16	5 ↔ 18
STATIC SEALING FACE $Ød_1$	1.6 max	10 max	63 max	70 max
STATIC HOUSING FACES L_1	3.2 max	16 max	125 max	140 max

CHAMFERS & RADII

GROOVE SECTION ≤ S mm	4.0	5.0	7.5	10.0		
MIN CHAMFER C mm	3.0	3.5	5.0	6.5		
MAX FILLET RAD r_1 mm	0.2	0.4	0.8	0.8		
GROOVE SECTION ≤ S in	0.125	0.187	0.250	0.312	0.375	0.500
MIN CHAMFER C in	0.093	0.093	0.125	0.156	0.187	0.217
MAX FILLET RAD r_1 in	0.008	0.008	0.016	0.032	0.032	0.032

TOLERANCES

$ØD_1$	$Ød_1$	L_1 mm	L_1 in
H9	js11	+0.25 -0	+0.010 -0

* Pressure rating of seal can be extended to 700 bar /10,000p.s.i. with the use of a back up ring.
If this option is required seek advice from your local Hallite Seals sales office.

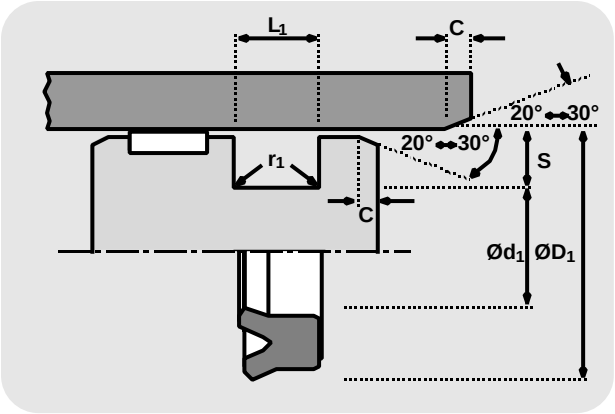

DESIGN

The Hallite 606 is an asymmetric piston seal designed to offer effective bore sealing in a wide variety of applications.

The outer *dynamic* lip is shorter and more robust to provide improved sealing and compression set characteristics over conventional U rings.

The seal can be used by itself as a single acting seal or fitted back to back in separate grooves for double acting applications.

Manufactured in Hallite's high performance polyurethane Hythane 181, The Hallite 606 provides the following benefits:

FEATURES

- FLEXIBLE FOR EASY INSTALLATION
- EXCELLENT WEAR RESISTANCE
- HIGH RESISTANCE TO EXTRUSION
- ROBUST DESIGN
- WIDE TEMPERATURE RANGE

NB: Part numbers suffixed by "‡" indicate housing sizes to meet ISO5597.

Piston seals

Hallite 606

metric

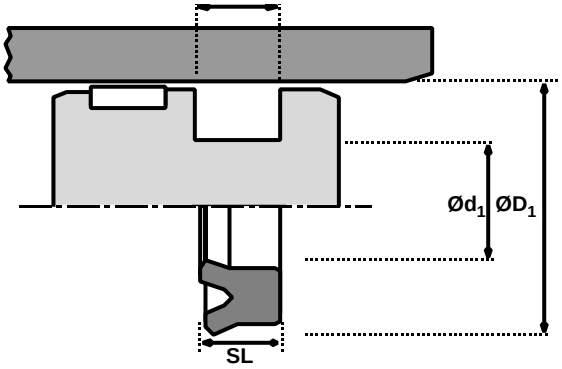

ØD1	TOL H9	Ød1	TOL js11	SL	L1 +0.25-0	PART No.
25	+0.05 +0.00	15	+0.06 -0.06	8.2	9.0	4390100
25	+0.05 +0.00	17	+0.06 -0.06	5.7	6.3	4418000
30	+0.05 +0.00	20	+0.07 -0.07	8.0	9.0	4354200
32	+0.06 +0.00	24	+0.07 -0.07	5.7	6.3	4351900‡
35	+0.06 +0.00	25	+0.07 -0.07	7.3	8.0	4365700
37	+0.06 +0.00	21	+0.07 -0.07	11.8	13.0	4354100
38	+0.06 +0.00	31	+0.07 -0.07	5.2	6.0	4728000
40	+0.06 +0.00	30	+0.07 -0.07	7.3	8.0	4299500‡
40	+0.06 +0.00	30	+0.07 -0.07	10.0	11.0	4400900
45	+0.06 +0.00	35	+0.08 -0.08	7.3	8.0	4315700
50	+0.06 +0.00	40	+0.08 -0.08	7.3	8.0	4319500‡
55	+0.07 +0.00	45	+0.08 -0.08	7.3	8.0	4380000
60	+0.07 +0.00	45	+0.08 -0.08	10.0	11.0	4407000
63	+0.07 +0.00	48	+0.08 -0.08	11.4	12.5	4383200
63	+0.07 +0.00	53	+0.10 -0.10	7.3	8.0	4341500‡
63	+0.07 +0.00	53	+0.10 -0.10	11.8	13.0	4318800
65	+0.07 +0.00	55	+0.10 -0.10	7.3	8.0	4424100

ØD1	TOL H9	Ød1	TOL js11	SL	L1 +0.25-0	PART No.
70	+0.07 +0.00	55	+0.10 -0.10	10.0	11.0	4448000
70	+0.07 +0.00	60	+0.10 -0.10	8.1	9.0	4709500
71	+0.07 +0.00	61	+0.10 -0.10	6.0	7.0	4492600
75	+0.07 +0.00	67	+0.10 -0.10	8.8	9.7	4322300
80	+0.07 +0.00	65	+0.10 -0.10	11.4	12.5	4363800‡
80	+0.07 +0.00	70	+0.10 -0.10	6.8	7.5	4370300
80	+0.07 +0.00	70	+0.10 -0.10	8.0	9.0	4709600
85	+0.07 +0.00	75	+0.10 -0.10	8.0	9.0	4709700
85.7	+0.09 +0.00	70.7	+0.10 -0.10	10.3	11.4	4493400
100	+0.09 +0.00	85	+0.11 -0.11	11.4	12.5	4363900‡
100	+0.09 +0.00	90	+0.11 -0.11	6.8	7.5	4375900
110	+0.09 +0.00	100	+0.11 -0.11	8.0	9.0	4533100
125	+0.10 +0.00	105	+0.11 -0.11	14.5	16.0	4364000‡
150	+0.10 +0.00	130	+0.13 -0.13	14.5	16.0	4390200
150	+0.10 +0.00	140	+0.13 -0.13	13.6	15.0	4390300
160	+0.10 +0.00	140	+0.13 -0.13	18.2	20.0	4364100
200	+0.12 +0.00	180	+0.13 -0.13	14.5	16.0	4392300

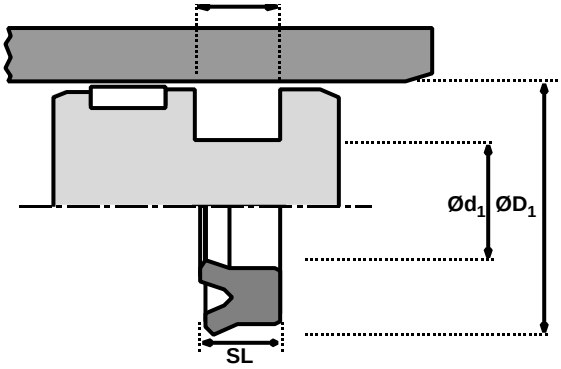

Piston seals

Hallite 606

inch

ØD1	TOL H9	Ød1	TOL js11	SL	L1 +0.010 -0	PART No.
0.750	+0.002 +0.000	0.375	+0.002 -0.002	0.312	0.344	4707100
1.125	+0.003 +0.000	0.750	+0.003 -0.003	0.312	0.344	4565600
1.500	+0.003 +0.000	1.125	+0.003 -0.003	0.250	0.275	4426700
1.500	+0.003 +0.000	1.250	+0.003 -0.003	0.250	0.275	4426800
2.000	+0.003 +0.000	1.375	+0.003 -0.003	0.500	0.550	4364200
2.000	+0.003 +0.000	1.500	+0.003 -0.003	0.375	0.413	4376000
2.000	+0.003 +0.000	1.625	+0.003 -0.003	0.187	0.206	4426900
2.000	+0.003 +0.000	1.625	+0.003 -0.003	0.312	0.344	4444300
2.000	+0.003 +0.000	1.625	+0.003 -0.003	0.375	0.413	4364400
2.250	+0.003 +0.000	1.750	+0.003 -0.003	0.375	0.413	4476500
2.250	+0.003 +0.000	1.875	+0.003 -0.003	0.375	0.413	4479600
2.500	+0.003 +0.000	1.625	+0.003 -0.003	0.500	0.550	4364500
2.500	+0.003 +0.000	1.875	+0.003 -0.003	0.500	0.550	4376100
2.500	+0.003 +0.000	2.000	+0.004 -0.004	0.250	0.275	4516500
2.500	+0.003 +0.000	2.000	+0.004 -0.004	0.375	0.413	4391900
2.500	+0.003 +0.000	2.125	+0.004 -0.004	0.250	0.275	4427000
2.500	+0.003 +0.000	2.125	+0.004 -0.004	0.312	0.344	4444400
2.500	+0.003 +0.000	2.125	+0.004 -0.004	0.375	0.413	4451300
3.000	+0.003 +0.000	2.250	+0.004 -0.004	0.455	0.500	4375000
3.000	+0.003 +0.000	2.375	+0.004 -0.004	0.500	0.550	4364600
3.000	+0.003 +0.000	2.500	+0.004 -0.004	0.250	0.275	4516600
3.000	+0.003 +0.000	2.500	+0.004 -0.004	0.375	0.413	4364700
3.000	+0.003 +0.000	2.625	+0.004 -0.004	0.375	0.413	4458400

ØD1	TOL H9	Ød1	TOL js11	SL	L1 +0.010 -0	PART No.
3.250	+0.003 +0.000	2.625	+0.004 -0.004	0.500	0.550	4376200
3.250	+0.003 +0.000	2.750	+0.004 -0.004	0.250	0.275	4516700
3.250	+0.003 +0.000	2.750	+0.004 -0.004	0.375	0.413	4474400
3.250	+0.003 +0.000	2.875	+0.004 -0.004	0.250	0.275	4427100
3.500	+0.003 +0.000	2.750	+0.004 -0.004	0.500	0.550	4444600
3.500	+0.003 +0.000	2.750	+0.004 -0.004	0.625	0.688	4376300
3.500	+0.003 +0.000	2.875	+0.004 -0.004	0.312	0.344	4571100
3.500	+0.003 +0.000	2.875	+0.004 -0.004	0.500	0.550	4364800
3.500	+0.003 +0.000	3.000	+0.004 -0.004	0.250	0.275	4516800
3.500	+0.003 +0.000	3.000	+0.004 -0.004	0.375	0.413	4364900
3.500	+0.003 +0.000	3.125	+0.004 -0.004	0.275	0.302	4572200
3.500	+0.003 +0.000	3.125	+0.004 -0.004	0.375	0.413	4444500
3.750	+0.003 +0.000	3.250	+0.004 -0.004	0.375	0.413	4444700
4.000	+0.003 +0.000	3.250	+0.004 -0.004	0.375	0.413	4517400
4.000	+0.003 +0.000	3.250	+0.004 -0.004	0.500	0.550	4444900
4.000	+0.003 +0.000	3.250	+0.004 -0.004	0.625	0.688	4376400
4.000	+0.003 +0.000	3.375	+0.004 -0.004	0.500	0.550	4365000
4.000	+0.003 +0.000	3.500	+0.004 -0.004	0.250	0.275	4516900
4.000	+0.003 +0.000	3.500	+0.004 -0.004	0.312	0.344	4427200
4.000	+0.003 +0.000	3.500	+0.004 -0.004	0.375	0.413	4365100
4.000	+0.003 +0.000	3.625	+0.004 -0.004	0.375	0.413	4444800
4.250	+0.003 +0.000	3.750	+0.004 -0.004	0.375	0.413	4445000
4.500	+0.003 +0.000	3.750	+0.004 -0.004	0.625	0.688	4371000

Piston seals

Hallite 606

inch

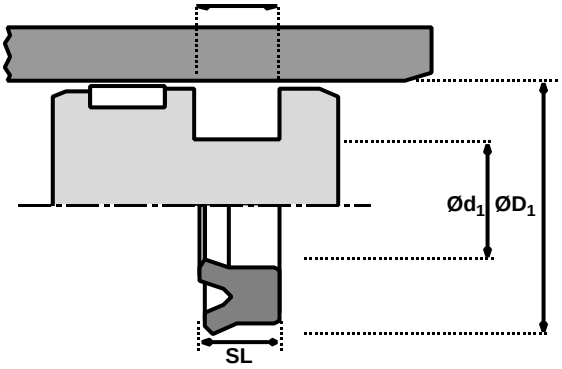

ØD1	TOL H9	Ød1	TOL js11	SL	L1 +0.010 -0	PART No.
4.500	+0.003 +0.000	4.000	+0.004 -0.004	0.375	0.413	4448100
4.750	+0.003 +0.000	4.379	+0.004 -0.004	0.275	0.302	4493600
5.000	+0.004 +0.000	4.250	+0.004 -0.004	0.375	0.413	4517500
5.000	+0.004 +0.000	4.250	+0.004 -0.004	0.500	0.550	4445100
5.000	+0.004 +0.000	4.250	+0.004 -0.004	0.625	0.688	4371100
5.000	+0.004 +0.000	4.500	+0.004 -0.004	0.250	0.275	4517000
5.000	+0.004 +0.000	4.500	+0.004 -0.004	0.375	0.413	4365200
5.000	+0.004 +0.000	4.500	+0.004 -0.004	0.562	0.619	4495900
5.250	+0.004 +0.000	4.500	+0.004 -0.004	0.500	0.550	4445200
5.500	+0.004 +0.000	4.750	+0.005 -0.005	0.625	0.688	4371200
6.000	+0.004 +0.000	5.250	+0.005 -0.005	0.375	0.413	4517600
6.000	+0.004 +0.000	5.250	+0.005 -0.005	0.500	0.550	4445300
6.000	+0.004 +0.000	5.250	+0.005 -0.005	0.625	0.688	4371300
6.000	+0.004 +0.000	5.500	+0.005 -0.005	0.250	0.275	4517100

ØD1	TOL H9	Ød1	TOL js11	SL	L1 +0.010 -0	PART No.
6.000	+0.004 +0.000	5.500	+0.005 -0.005	0.375	0.413	4365300
6.000	+0.004 +0.000	5.500	+0.005 -0.005	0.562	0.619	4393400
6.250	+0.004 +0.000	5.750	+0.005 -0.005	0.562	0.619	4458300
7.000	+0.004 +0.000	6.250	+0.005 -0.005	0.375	0.413	4517700
7.000	+0.004 +0.000	6.250	+0.005 -0.005	0.500	0.550	4445500
7.000	+0.004 +0.000	6.250	+0.005 -0.005	0.625	0.688	4371400
7.000	+0.004 +0.000	6.500	+0.005 -0.005	0.250	0.275	4517200
7.000	+0.004 +0.000	6.500	+0.005 -0.005	0.375	0.413	4445400
8.000	+0.005 +0.000	7.250	+0.006 -0.006	0.625	0.688	4371500
8.000	+0.005 +0.000	7.500	+0.006 -0.006	0.250	0.275	4517300
9.000	+0.005 +0.000	8.000	+0.006 -0.006	0.750	0.825	4371600
10.000	+0.005 +0.000	9.000	+0.006 -0.006	0.750	0.825	4536200
10.000	+0.005 +0.000	9.250	+0.006 -0.006	0.375	0.413	4575100

HALLITE

HALLITE TYPE 608

OPERATING CONDITIONS METRIC			
MAXIMUM WORKING PRESSURE bar			
MAXIMUM SPEED	TEMPERATURE RANGE		MEDIA
m/sec	−40°C + 80°C		LUBRICATED AIR
1.0	15 bar		
SURFACE ROUGHNESS			
	μmRa	μmRt	
DYNAMIC SEALING FACE $ØD_1$	0.1 to 0.4	4 max	
STATIC HOUSING FACE $Ød_1$	3.2 max	16 max	
STATIC SEALING FACES L_1	0.8 max	10 max	

OPERATING CONDITIONS INCH		
MAXIMUM WORKING PRESSURE p.s.i.		
MAXIMUM SPEED	TEMPERATURE RANGE	MEDIA
ft/sec	−40°F + 180°F	LUBRICATED AIR
3	230 p.s.i.	
SURFACE ROUGHNESS		
	μin CLA	
DYNAMIC SEALING FACE $ØD_1$	4 to 16	
STATIC HOUSING FACE $Ød_1$	125 max	
STATIC SEALING FACES L_1	32 max	

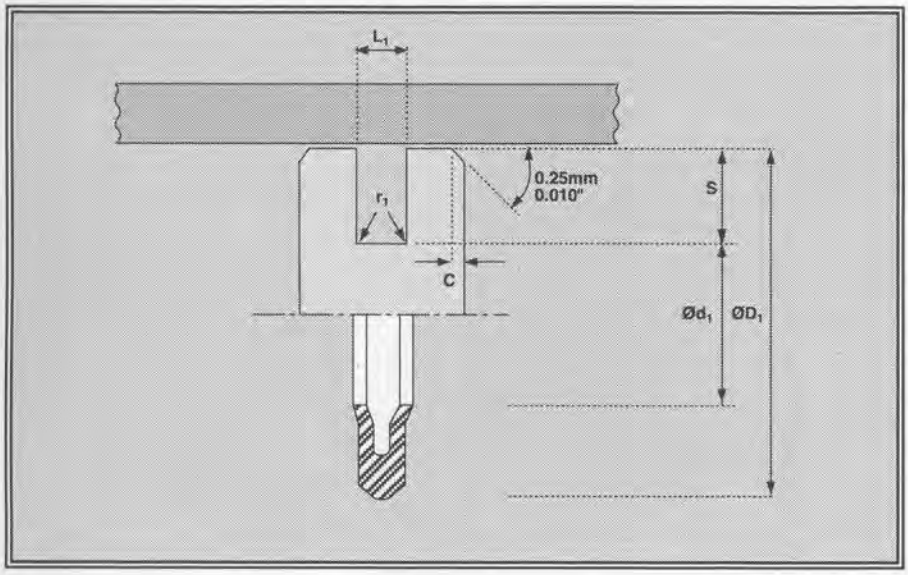

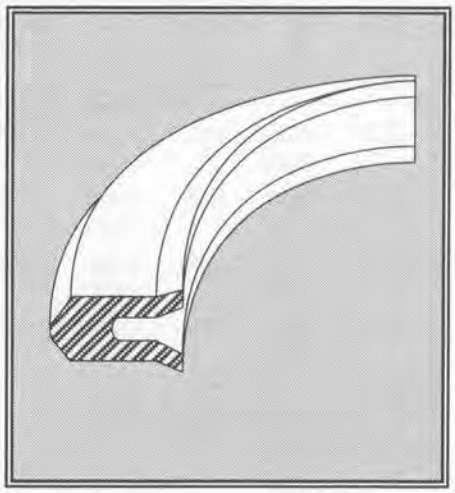

DESIGN

The Hallite Type 608 double acting piston seal is particularly suited to pneumatic applications. Manufactured in Hallite Hythane® material to offer both ultra low friction - significantly less than that of rubber - and ultra long life.

FEATURES

- EFFECTIVE SEALING
- LOW FRICTION
- EASY INSTALLATION
- EXCELLENT TEMPERATURE RANGE

INSTALLATION

FULL INSTALLATION AND ASSEMBLY DETAILS OF HALLITE TYPE 608 SEALS AVAILABLE ON REQUEST.

Rod Seals

Hallite

610

TECHNICAL DETAILS

METRIC ○ — INCH ●

OPERATING CONDITIONS

MAXIMUM SPEED	1.0 m/sec	3.0 ft/sec
TEMPERATURE RANGE	-45°C + 110°C	-50°F + 230°F
MAXIMUM PRESSURE	400 bar	6000 p.s.i.

MAXIMUM EXTRUSION GAP

Figures show the maximum permissible gap all on one side using minimum rod Ø and maximum clearance Ø.

PRESSURE bar	160	250	400
MAXIMUM GAP mm	0.6	0.5	0.4
PRESSURE p.s.i.	2400	3750	6000

SURFACE ROUGHNESS

	µmRa	µmRt	µinCLA	µinRMS
DYNAMIC SEALING FACE $Ød_1$	0.1 ↔ 0.4	4 max	4 ↔ 16	5 ↔ 18
STATIC SEALING FACE $ØD_1$	1.6 max	10 max	63 max	70 max
STATIC HOUSING FACES L_1	3.2 max	16 max	125 max	140 max

CHAMFERS & RADII

GROOVE SECTION ≤ S mm	4.0	5.0	7.5
MIN CHAMFER C mm	3.0	3.5	5.0
MAX FILLET RAD r_1 mm	0.2	0.4	0.8
MAX FILLET RAD r_2 mm	0.4	0.8	1.2

TOLERANCES

$Ød_1$	$ØD_1$	L_1 mm
f9	Js11	+0.25 -0

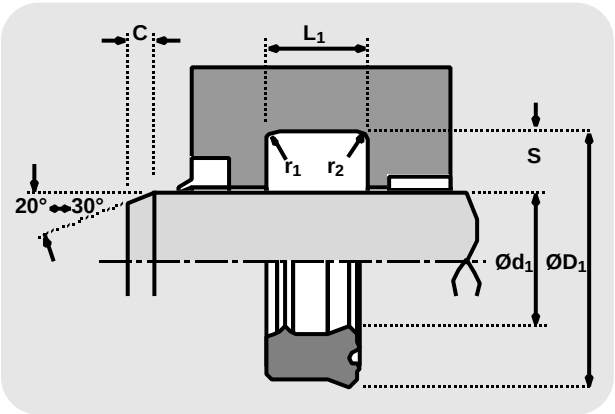

DESIGN

The Hallite 610 is an asymmetric ‡solid· seal offering excellent dry rod sealing for light and medium duty applications.

It is designed to be less sensitive to pressure fluctuations than Hallite 605 ‚U„ ring design.

Manufactured in Hallite„s high performance polyurethane - Hythane® ~ 181 - the type 610 is an extremely flexible seal making installation very easy

FEATURES:

- INSENSITIVE TO PRESSURE FLUCTUATION.
- TWIN LIP DESIGN OFFERING:
  LOWER FRICTION,
  IMPROVED SEALING,
  PRIMARY LIP PROTECTION,
  INCREASED SEAL STABILITY.

NB: Part numbers suffixed by "‡" indicate housing sizes to meet ISO5597.

Rod seals

Hallite
610

metric

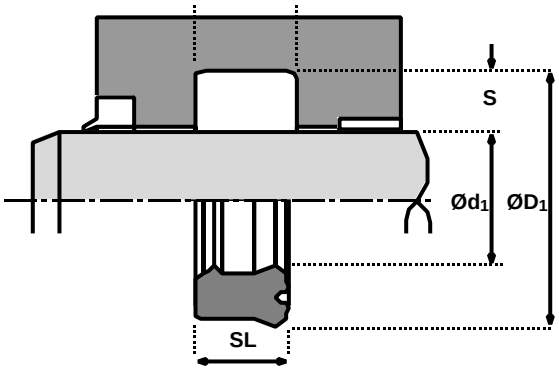

Ød1	TOL f9	ØD1	TOL Js11	SL	L1 +0.25-0	PART No.
8	-0.013 -0.049	16	+0.06 -0.06	5.3	6.0	4581000
14	-0.016 -0.059	22	+0.07 -0.07	5.3	6.0	4580900
16	-0.016 -0.059	24	+0.07 -0.07	6.0	7.0	4319300
18	-0.016 -0.059	25	+0.07 -0.07	4.6	5.6	4334600‡
20	-0.020 -0.072	26	+0.07 -0.07	4.5	5.5	4319400
20	-0.020 -0.072	28	+0.07 -0.07	6.0	7.0	4307500
22	-0.020 -0.072	28	+0.07 -0.07	4.5	5.5	4356000
22	-0.020 -0.072	29	+0.07 -0.07	4.6	5.6	4324200‡
22	-0.020 -0.072	30	+0.07 -0.07	6.0	7.0	4316100
22	-0.020 -0.072	30	+0.07 -0.07	7.0	8.0	4389300
25	-0.020 -0.072	33	+0.08 -0.08	6.0	7.0	4316200
25	-0.020 -0.072	33	+0.08 -0.08	8.0	9.0	4299000
28	-0.020 -0.072	36	+0.08 -0.08	5.3	6.3	4334700‡
28	-0.020 -0.072	36	+0.08 -0.08	6.0	7.0	4323200
28	-0.020 -0.072	36	+0.08 -0.08	8.0	9.0	4307700
30	-0.020 -0.072	38	+0.08 -0.08	6.0	7.0	4308900
30	-0.020 -0.072	38	+0.08 -0.08	8.0	9.0	4362400
30	-0.020 -0.072	40	+0.08 -0.08	7.0	8.0	4558300
32	-0.025 -0.087	40	+0.08 -0.08	6.0	7.0	4316300
35	-0.025 -0.087	43	+0.08 -0.08	6.0	7.0	4301700
35	-0.025 -0.087	43	+0.08 -0.08	8.0	9.0	4592800
35	-0.025 -0.087	45	+0.08 -0.08	10.0	11.0	4299300
36	-0.025 -0.087	44	+0.08 -0.08	5.3	6.3	4324300‡

Ød1	TOL f9	ØD1	TOL Js11	SL	L1 +0.25-0	PART No.
36	-0.025 -0.087	44	+0.08 -0.08	8.0	9.0	4308000
36	-0.025 -0.087	46	+0.08 -0.08	10.0	11.0	4299400
40	-0.025 -0.087	48	+0.08 -0.08	5.4	6.4	4329200
40	-0.025 -0.087	48	+0.08 -0.08	6.5	7.5	4323300
40	-0.025 -0.087	48	+0.08 -0.08	8.0	9.0	4301800
45	-0.025 -0.087	52	+0.10 -0.10	10.0	11.0	4330000
45	-0.025 -0.087	53	+0.10 -0.10	5.3	6.3	4334800‡
45	-0.025 -0.087	53	+0.10 -0.10	6.0	7.0	4711000
45	-0.025 -0.087	53	+0.10 -0.10	8.0	9.0	4308100
45	-0.025 -0.087	55	+0.10 -0.10	10.0	11.0	4389400
50	-0.025 -0.087	58	+0.10 -0.10	5.3	6.3	4356900
50	-0.025 -0.087	58	+0.10 -0.10	8.0	9.0	4299100
50	-0.025 -0.087	60	+0.10 -0.10	10.0	11.0	4389500
55	0.030 -0.104	63	+0.10 -0.10	8.0	9.0	4323000
55	-0.030 -0.104	65	+0.10 -0.10	7.0	8.0	4385500
55	-0.030 -0.104	65	+0.10 -0.10	10.0	11.0	4389600
55	-0.030 -0.104	65	+0.10 -0.10	11.8	13.0	4389700
56	-0.030 -0.104	64	+0.10 -0.10	8.0	9.0	4316400
56	-0.030 -0.104	66	+0.10 -0.10	6.8	7.5	4334900‡
60	-0.030 -0.104	68	+0.10 -0.10	8.0	9.0	4299200
60	-0.030 -0.104	68	+0.10 -0.10	11.4	12.5	4329900
60	-0.030 -0.104	70	+0.10 -0.10	7.0	8.0	4303200
60	-0.030 -0.104	70	+0.10 -0.10	11.8	13.0	4389800

Hallite 610

metric

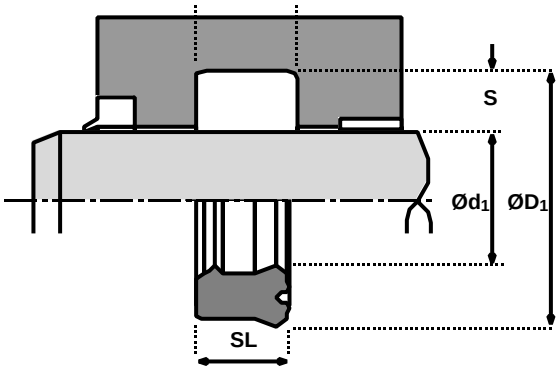

Ød1	TOL f9	ØD1	TOL Js11	SL	L1 +0.25-0	PART No.
63	-0.030 -0.104	71	+0.10 -0.10	8.0	9.0	4316500
63	-0.030 -0.104	75	+0.10 -0.10	8.6	9.6	4360500
65	-0.030 -0.104	73	+0.10 -0.10	8.0	9.0	4362500
65	-0.030 -0.104	75	+0.10 -0.10	11.8	13.0	4389900
70	-0.030 -0.104	78	+0.10 -0.10	8.0	9.0	4316600
70	-0.030 -0.104	80	+0.10 -0.10	6.5	7.5	4335000‡
70	-0.030 -0.104	80	+0.10 -0.10	11.8	13.0	4390000

Ød1	TOL f9	ØD1	TOL Js11	SL	L1 +0.25-0	PART No.
75	-0.030 -0.104	83	+0.10 -0.10	8.0	9.0	4539400
80	-0.030 -0.104	88	+0.11 -0.10	8.0	9.0	4316700
85	-0.036 -0.123	97	+0.11 -0.11	9.0	10.0	4328100
87	-0.036 -0.123	95	+0.11 -0.11	8.0	9.0	4323700
90	-0.036 -0.123	98	+0.11 -0.11	8.0	9.0	4316800
100	-0.036 -0.123	108	+0.11 -0.11	8.0	9.0	4316900
134	-0.043 -0.143	147	+0.13 -0.13	12.0	13.3	4588100

Notes

Hallite

616

TECHNICAL DETAILS

METRIC ○ INCH ●

OPERATING CONDITIONS

MAXIMUM SPEED	1.0 m/sec	3.0 ft/sec
TEMPERATURE RANGE	-45°C + 110°C	-50°F + 230°F
MAXIMUM PRESSURE	240 bar	3500 p.s.i.

MAXIMUM EXTRUSION GAP

Figures show the maximum permissible gap all on one side using minimum rod Ø and maximum clearance Ø.

PRESSURE bar	160	240
MAXIMUM GAP mm	0.6	0.5
PRESSURE p.s.i.	2400	3750

SURFACE ROUGHNESS

	µmRa	µmRt	µinCLA	µinRMS
DYNAMIC SEALING FACE $Ød_1$	0.1 ↔ 0.4	4 max	4 ↔ 16	5 ↔ 18
STATIC SEALING FACE $ØD_1$	1.6 max	10 max	63 max	70 max
STATIC HOUSING FACES L_1	3.2 max	16 max	125 max	140 max

CHAMFERS & RADII

GROOVE SECTION ≤ S mm	3.75	5.50	7.75
MIN CHAMFER C mm	2.00	3.00	5.00
MAX FILLET RAD r_1 mm	0.40	0.80	1.20

TOLERANCES

$Ød_1$	$ØD_1$	L_1 mm
f9	H11	+0.25 -0

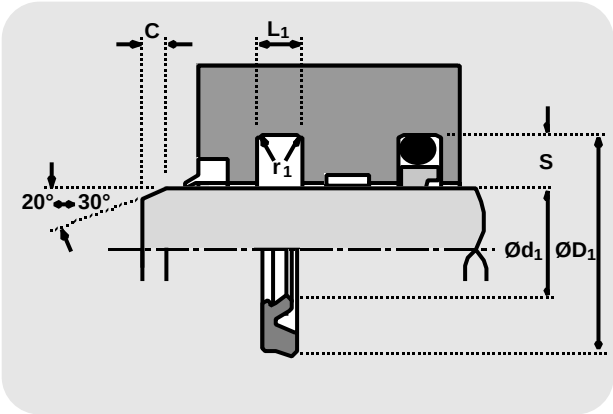

NOTE
Hallite 616 is used either as a single seal or in a combination with Hallite 16. The latter arrangement is recommended when pressure peaks can occur, as in cylinders with cushioning, in this case the Hallite 16 is fitted into the pressure side of the housing while the Hallite 616 ensures minimal leakage sealing.

It is recommended that the Hallite technical department be consulted when considering this arrangement.

DESIGN

The Hallite 616 is a revolutionary seal from Hallite. Incorporating the sealing efficiency of the Hallite 605 with the compact grooves used by PTFE rod seals.

Hallite„s 616 is an asymmetric twin lip seal, designed for light and medium duty applications where space and friction are at a premium.

Manufactured in Hallite„s high performance polyurethane Hythane 181, the Hallite 616 is an extremely flexible seal making installation very easy.

FEATURES:

- EASY ASSEMBLY
- TWIN LIP PERFORMANCE
- ISO 7425 HOUSINGS

NB: Part numbers suffixed by "‡" indicate housing sizes to meet ISO7425-2.

Rod seals

Hallite 616

metric

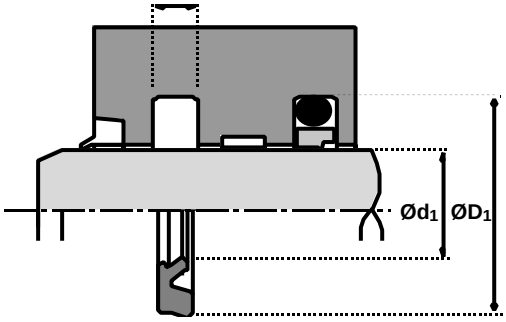

Ød1	TOL f9	ØD1	TOL H11	SL	L1 +0.25-0	PART No.
14	-0.016 -0.059	21.5	+0.13 +0.00	2.8	3.2	4577700‡
18	-0.016 -0.059	25.5	+0.13 +0.00	2.8	3.2	4341800‡
20	-0.016 -0.059	27.5	+0.13 +0.00	2.8	3.2	4721700
20	-0.020 -0.072	31.0	+0.16 +0.00	3.9	4.2	4367400‡
22	-0.020 -0.072	33.0	+0.16 +0.00	3.9	4.2	4341900‡
25	-0.020 -0.072	32.5	+0.16 +0.00	3.9	3.2	4721800
25	-0.020 -0.072	36.0	+0.16 +0.00	3.9	4.2	4367500‡
25.4	-0.020 -0.072	32.9	+0.16 +0.00	2.8	3.2	4469000
28	-0.020 -0.072	39.0	+0.16 +0.00	3.9	4.2	4367600‡
30	-0.020 -0.072	41.0	+0.16 +0.00	3.9	4.2	4404500
32	-0.025 -0.072	39.5	+0.16 +0.00	3.9	3.2	4714800
32	-0.025 -0.087	43.0	+0.16 +0.00	3.9	4.2	4367700‡
36	-0.025 -0.087	47.0	+0.16 +0.00	3.9	4.2	4353100‡
40	-0.025 -0.087	51.0	+0.16 +0.00	3.9	4.2	4722900
40	-0.025 -0.087	55.5	+0.19 +0.00	6.0	6.3	4367800
45	-0.025 -0.087	56.0	+0.19 +0.00	3.9	4.2	4556300‡
45	-0.025 -0.087	60.5	+0.19 +0.00	6.0	6.3	4367900
50	-0.025 -0.087	61.0	+0.19 +0.00	6.0	4.2	4723000

Ød1	TOL f9	ØD1	TOL H11	SL	L1 +0.25-0	PART No.
50	-0.025 -0.087	65.5	+0.19 +0.00	6.0	6.3	4368000
56	-0.030 -0.104	71.5	+0.19 +0.00	6.0	6.3	4368100‡
60	-0.030 -0.104	70.6	+0.19 +0.00	3.9	4.2	4410800
60	-0.030 -0.104	75.5	+0.19 +0.00	6.0	6.3	4727100
63	-0.030 -0.104	78.5	+0.19 +0.00	6.0	6.3	4368200‡
65	-0.030 -0.104	80.5	+0.19 +0.00	6.0	6.3	4548000
70	-0.030 -0.104	85.5	+0.22 +0.00	6.0	6.3	4368300‡
75	-0.030 -0.104	90.5	+0.22 +0.00	6.0	6.3	4728200
80	-0.030 -0.104	95.5	+0.22 +0.00	6.0	6.3	4368400‡
85	-0.036 -0.123	100.5	+0.22 +0.00	6.0	6.3	4538400
90	-0.036 -0.123	105.5	+0.22 +0.00	6.0	6.3	4368500‡
95	-0.036 -0.123	110.5	+0.22 +0.00	6.0	6.3	4538500
100	-0.036 -0.123	115.5	+0.22 +0.00	6.0	6.3	4368600‡
110	-0.036 -0.123	125.5	+0.25 +0.00	6.0	6.3	4545400‡
125	-0.043 -0.143	140.5	+0.25 +0.00	6.0	6.3	4545500‡
140	-0.043 -0.143	155.5	+0.25 +0.00	6.0	6.3	4545600‡
160	-0.043 -0.143	175.5	+0.25 +0.00	6.0	6.3	4548100‡

Rod seals

Hallite

621

TECHNICAL DETAILS

METRIC ○ — INCH ●

OPERATING CONDITIONS

MAXIMUM SPEED	1.0 m/sec	3.0 ft/sec
TEMPERATURE RANGE	-45°C + 110°C	-50°F + 230°F
MAXIMUM PRESSURE	700 bar	10,000 p.s.i.

MAXIMUM EXTRUSION GAP

Figures show the maximum permissible gap all on one side using minimum rod Ø and maximum clearance Ø.

PRESSURE bar	160	250	400	500	700
MAXIMUM GAP mm	1.0	0.8	0.6	0.4	0.25
PRESSURE p.s.i.	2400	3750	6000	7500	10,000
MAXIMUM GAP in	0.040	0.032	0.024	0.016	0.010

SURFACE ROUGHNESS

	µmRa	µmRt	µinCLA	µinRMS
DYNAMIC SEALING FACE $Ød_1$	0.1 ↔ 0.4	4 max	4 ↔ 16	5 ↔ 18
STATIC SEALING FACE $ØD_1$	1.6 max	10 max	63 max	70 max
STATIC HOUSING FACES L_1	3.2 max	16 max	125 max	140 max

CHAMFERS & RADII

GROOVE SECTION ≤ S mm	4.0	5.0	7.5	10.0	12.5	15.0
MIN CHAMFER C mm	3.0	3.5	5.0	6.5	7.0	8.0
MAX FILLET RAD r_1 mm	0.2	0.4	0.8	0.8	1.2	1.6
MAX FILLET RAD r_2 mm	0.4	0.8	1.2	1.2	1.6	2.4
GROOVE SECTION ≤ S in	0.125	0.187	0.250	0.312	0.375	0.500
MIN CHAMFER C in	0.093	0.093	0.125	0.156	0.187	0.217
MAX FILLET RAD r_1 in	0.008	0.008	0.016	0.016	0.032	0.032
MAX FILLET RAD r_2 in	0.016	0.016	0.032	0.032	0.047	0.047

TOLERANCES

$Ød_1$	$ØD_1$	L_1 mm	L_1 in
f9	Js11	+0.25 -0	+0.010 -0

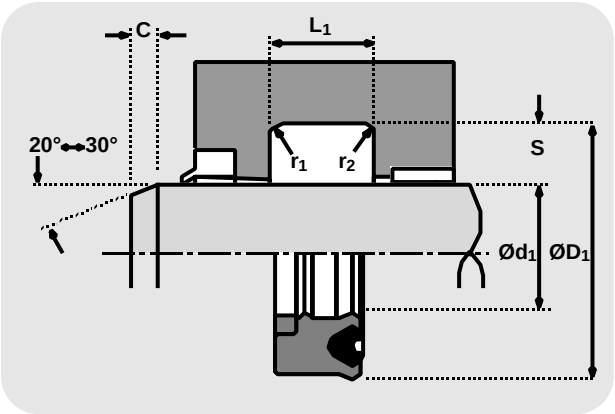

DESIGN

The Hallite 621 is a top of the range high pressure rod seal. The design of the seal incorporates a unique profiled NBR energiser to ensure complete lip actuation under all pressure conditions and to cushion the seal against shock loadings.

The shell is moulded in Hallite„s high performance polyurethane Hythane 181, ensuring flexibility for installation and performance at low temperatures.

The Hallite 621 also benefits from Hallite„s twin lip profile for dry rod sealing.

FEATURES

- HIGH PRESSURE/SHOCK LOAD CAPABILITY
- TWIN LIP DESIGN OFFERING:
  LOWER FRICTION
  IMPROVED SEALING
  PRIMARY LIP PROTECTION
  INCREASED SEAL STABILITY
- POLYACETAL ANTI-EXTRUSION RING.

NB: Part numbers suffixed by ‡†· are designed to suit popular Asian housings.

Part numbers suffixed by ‡‡· indicate housing sizes to meet ISO5597.

Rod seals

Hallite
621

metric

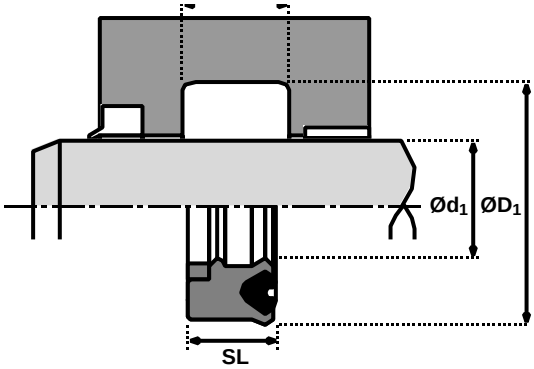

Ød1	TOL f9	ØD1	TOL Js11	SL	L1 +0.25-0	PART No.
14	-0.016 -0.059	21.5	+0.13 +0.00	2.8	3.2	4577700‡
18	-0.016 -0.059	25.5	+0.13 +0.00	2.8	3.2	4341800‡
20	-0.016 -0.059	27.5	+0.13 +0.00	2.8	3.2	4721700
20	-0.020 -0.072	31.0	+0.16 +0.00	3.9	4.2	4367400‡
22	-0.020 -0.072	33.0	+0.16 +0.00	3.9	4.2	4341900‡
25	-0.020 -0.072	32.5	+0.16 +0.00	3.9	3.2	4721800
25	-0.020 -0.072	36.0	+0.16 +0.00	3.9	4.2	4367500‡
25.4	-0.020 -0.072	32.9	+0.16 +0.00	2.8	3.2	4469000
28	-0.020 -0.072	39.0	+0.16 +0.00	3.9	4.2	4367600‡
30	-0.020 -0.072	41.0	+0.16 +0.00	3.9	4.2	4404500
32	-0.025 -0.072	39.5	+0.16 +0.00	3.9	3.2	4714800
32	-0.025 -0.087	43.0	+0.16 +0.00	3.9	4.2	4367700‡
36	-0.025 -0.087	47.0	+0.16 +0.00	3.9	4.2	4353100‡
40	-0.025 -0.087	51.0	+0.16 +0.00	3.9	4.2	4722900
40	-0.025 -0.087	55.5	+0.19 +0.00	6.0	6.3	4367800
45	-0.025 -0.087	56.0	+0.19 +0.00	3.9	4.2	4556300‡
45	-0.025 -0.087	60.5	+0.19 +0.00	6.0	6.3	4367900
50	-0.025 -0.087	61.0	+0.19 +0.00	6.0	4.2	4723000

Ød1	TOL f9	ØD1	TOL Js11	SL	L1 +0.25-0	PART No.
50	-0.025 -0.087	65.5	+0.19 +0.00	6.0	6.3	4368000
56	-0.030 -0.104	71.5	+0.19 +0.00	6.0	6.3	4368100‡
60	-0.030 -0.104	70.6	+0.19 +0.00	3.9	4.2	4410800
60	-0.030 -0.104	75.5	+0.19 +0.00	6.0	6.3	4727100
63	-0.030 -0.104	78.5	+0.19 +0.00	6.0	6.3	4368200‡
65	-0.030 -0.104	80.5	+0.19 +0.00	6.0	6.3	4548000
70	-0.030 -0.104	85.5	+0.22 +0.00	6.0	6.3	4368300‡
75	-0.030 -0.104	90.5	+0.22 +0.00	6.0	6.3	4728200
80	-0.030 -0.104	95.5	+0.22 +0.00	6.0	6.3	4368400‡
85	-0.036 -0.123	100.5	+0.22 +0.00	6.0	6.3	4538400
90	-0.036 -0.123	105.5	+0.22 +0.00	6.0	6.3	4368500‡
95	-0.036 -0.123	110.5	+0.22 +0.00	6.0	6.3	4538500
100	-0.036 -0.123	115.5	+0.22 +0.00	6.0	6.3	4368600‡
110	-0.036 -0.123	125.5	+0.25 +0.00	6.0	6.3	4545400‡
125	-0.043 -0.143	140.5	+0.25 +0.00	6.0	6.3	4545500‡
140	-0.043 -0.143	155.5	+0.25 +0.00	6.0	6.3	4545600‡
160	-0.043 -0.143	175.5	+0.25 +0.00	6.0	6.3	4548100‡

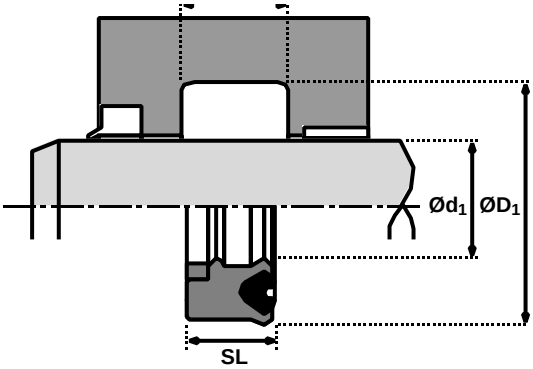

Rod seals

Hallite 621

inch

Ød1	TOL f9	ØD1	TOL Js11	SL	L1 +0.010 -0	PART No.
1.375	-0.0010 -0.0034	1.875	+0.003 -0.003	0.375	0.413	4707710
1.500	-0.0010 -0.0034	1.875	+0.003 -0.003	0.250	0.275	4484410
1.500	-0.0010 -0.0034	1.875	+0.003 -0.003	0.312	0.344	4484510
1.500	-0.0010 -0.0034	2.000	+0.004 -0.004	0.375	0.413	4484910
1.750	-0.0010 -0.0034	2.125	+0.004 -0.004	0.250	0.275	4484610
1.750	-0.0010 -0.0034	2.125	+0.004 -0.004	0.375	0.413	4484710
1.750	-0.0010 -0.0034	2.250	+0.004 -0.004	0.375	0.413	4485010
2.000	-0.0012 -0.0041	2.375	+0.004 -0.004	0.375	0.413	4484810
2.000	-0.0012 -0.0041	2.500	+0.004 -0.004	0.375	0.413	4485110
2.125	-0.0012 -0.0041	2.625	+0.004 -0.004	0.375	0.413	4592510
2.250	-0.0012 -0.0041	2.750	+0.004 -0.004	0.375	0.413	4485210
2.375	-0.0012 -0.0041	2.875	+0.004 -0.004	0.375	0.413	4485310
2.500	-0.0012 -0.0041	3.000	+0.004 -0.004	0.375	0.413	4485410
2.750	-0.0012 -0.0041	3.250	+0.004 -0.004	0.375	0.413	4485510
3.000	-0.0012 -0.0041	3.500	+0.004 -0.004	0.375	0.413	4485610
3.000	-0.0012 -0.0041	3.625	+0.004 -0.004	0.500	0.550	4486810
3.000	-0.0012 -0.0041	3.750	+0.004 -0.004	0.625	0.688	4489310
3.250	-0.0014 -0.0048	3.750	+0.004 -0.004	0.375	0.413	4485710
3.500	-0.0014 -0.0048	4.000	+0.004 -0.004	0.375	0.413	4485810

Ød1	TOL f9	ØD1	TOL Js11	SL	L1 +0.010 -0	PART No.
3.500	-0.0014 -0.0048	4.125	+0.004 -0.004	0.500	0.550	4486910
3.500	-0.0014 -0.0048	4.250	+0.004 -0.004	0.625	0.688	4573610
3.750	-0.0014 -0.0048	4.125	+0.004 -0.004	0.375	0.413	4709310
4.000	-0.0014 -0.0048	4.500	+0.004 -0.004	0.375	0.413	4486010
4.000	-0.0014 -0.0048	4.500	+0.004 -0.004	0.562	0.619	4486110
4.000	-0.0014 -0.0048	4.625	+0.004 -0.004	0.562	0.619	4487010
4.000	-0.0014 -0.0048	4.750	+0.005 -0.005	0.625	0.688	4483310
4.500	-0.0014 -0.0048	5.000	+0.005 -0.005	0.375	0.413	4486210
4.500	-0.0014 -0.0048	5.000	+0.005 -0.005	0.562	0.619	4486310
4.500	-0.0014 -0.0048	5.125	+0.005 -0.005	0.625	0.688	4486410
4.500	-0.0014 -0.0048	5.250	+0.005 -0.005	0.625	0.688	4483410
5.000	-0.0017 -0.0056	5.500	+0.005 -0.005	0.562	0.619	4486510
5.000	-0.0017 -0.0056	5.625	+0.005 -0.005	0.625	0.688	4487110
5.000	-0.0017 -0.0056	5.750	+0.005 -0.005	0.625	0.688	4483510
5.500	-0.0017 -0.0056	6.000	+0.005 -0.005	0.562	0.619	4486610
6.000	-0.0017 -0.0056	6.500	+0.005 -0.005	0.562	0.619	4486710
6.000	-0.0017 -0.0056	6.750	+0.005 -0.005	0.625	0.688	4487210
7.000	-0.0017 -0.0056	7.750	+0.005 -0.005	0.625	0.688	4588210
8.000	-0.0020 -0.0065	8.750	+0.006 -0.006	0.625	0.688	4573210

Notes

Rod seals

Hallite

631

TECHNICAL DETAILS

METRIC ○ — INCH ●

OPERATING CONDITIONS

MAXIMUM SPEED	0.5 m/sec	1.5 ft/sec
TEMPERATURE RANGE	-45°C + 110°C	-50°F + 230°F
MAXIMUM PRESSURE	700 bar	10,000 p.s.i.

MAXIMUM EXTRUSION GAP

Figures show the maximum permissible gap all on one side using minimum rod Ø and maximum clearance Ø.

PRESSURE bar	160	250	400	500	700
MAXIMUM GAP mm	1.0	0.8	0.6	0.4	0.25
PRESSURE p.s.i.	2400	3750	6000	7500	10,000

SURFACE ROUGHNESS

	µmRa	µmRt	µinCLA	µinRMS
DYNAMIC SEALING FACE $Ød_1$	0.1 ↔ 0.4	4 max	4 ↔ 16	5 ↔ 18
STATIC SEALING FACE $ØD_1$	1.6 max	10 max	63 max	70 max
STATIC HOUSING FACES L_1	3.2 max	16 max	125 max	140 max

CHAMFERS & RADII

GROOVE SECTION ≤ S mm	4.0	5.0	7.5	10.0	12.5	15.0
MIN CHAMFER C mm	3.0	3.5	5.0	6.5	7.0	8.0
MAX FILLET RAD r_1 mm	0.2	0.4	0.8	0.8	1.2	1.6
MAX FILLET RAD r_2 mm	0.4	0.8	1.2	1.2	1.6	2.4

TOLERANCES

$Ød_1$	$ØD_1$	L_1 mm
f9	Js11	+0.25 -0

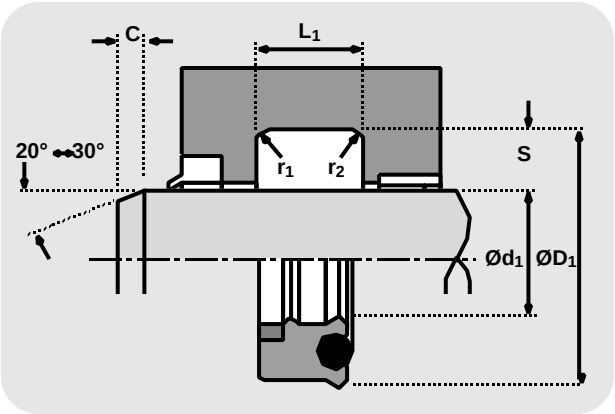

DESIGN

The Hallite 631 is a high pressure rod seal. The thermoplastic polyester elastomer seal generally has an O ring energiser to ensure complete lip actuation under all pressure conditions and to cushion the seal against shock loadings. The Hallite 631 is also available without an anti extrusion ring (Hallite 630). The operating conditions given are for general use with hydraulic mineral oil.

FEATURES:

- HIGH PRESSURE/SHOCK LOAD CAPABILITY
- POLYACETAL ANTI-EXTRUSION RING

Rod seals

Hallite 631

metric

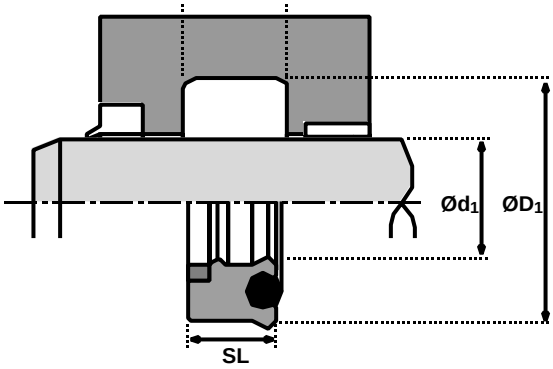

Ød1	TOL f9	ØD1	TOL Js11	SL	L1 +0.25 -0	PART No.
32.0	-0.025 -0.087	44.0	+0.08 -0.08	8.1	9.6	4344110
40.0	-0.025 -0.087	52.0	+0.10 -0.10	8.7	9.6	4326310
50.0	-0.025 -0.087	62.0	+0.10 -0.10	8.7	9.6	4326410
60.0	-0.030 -0.104	72.0	+0.10 -0.10	8.7	9.6	4344210*
60.0	-0.030 -0.104	75.0	+0.10 -0.10	11.8	13.0	4451210
63.0	-0.030 -0.104	75.0	+0.10 -0.10	8.7	9.6	4326510*
70.0	-0.030 -0.104	82.0	+0.11 -0.11	8.7	9.6	4344310*
80.0	-0.030 -0.104	95.0	+0.11 -0.11	14.5	16.0	4446510
85.0	-0.036 -0.123	97.0	+0.11 -0.11	8.7	9.6	4344510*
90.0	-0.036 -0.123	105.0	+0.11 -0.11	14.5	16.0	4428010
100.0	-0.036 -0.123	115.0	+0.11 -0.11	14.5	16.0	4397610*
110.0	-0.036 -0.123	125.0	+0.13 -0.13	14.5	16.0	4445610
115.0	-0.036 -0.123	130.0	+0.13 -0.13	14.5	16.0	4455410
120.0	-0.036 -0.123	135.0	+0.13 -0.13	14.5	16.0	4452010
125.0	-0.043 -0.143	140.0	+0.13 -0.13	14.5	16.0	4446910
128.0	-0.043 -0.143	143.0	+0.13 -0.13	14.5	16.0	4581610
150.0	-0.043 -0.143	165.0	+0.13 -0.13	14.5	16.0	4389110*
160.0	-0.043 -0.143	175.0	+0.13 -0.13	14.5	16.0	4405010*
160.0	-0.043 -0.143	185.0	+0.13 -0.13	18.8	20.0	4401710*
165.0	-0.043 -0.143	182.0	+0.15 -0.15	14.5	16.0	4537410
177.0	-0.043 -0.143	192.0	+0.15 -0.15	14.5	16.0	4445710

Ød1	TOL f9	ØD1	TOL Js11	SL	L1 +0.25 -0	PART No.
185.0	-0.050 -0.165	210.0	+0.15 -0.15	18.2	20.0	4546610
190.0	-0.050 -0.165	205.0	+0.15 -0.15	14.5	16.0	4430810
195.0	-0.050 -0.165	210.0	+0.15 -0.15	14.5	16.0	4459310
195.0	-0.050 -0.165	215.0	+0.15 -0.15	14.5	16.0	4550510
200.0	-0.050 -0.165	220.0	+0.15 -0.15	14.5	16.0	4387610*
210.0	-0.050 -0.165	230.0	+0.15 -0.15	14.5	16.0	4472910
225.0	-0.050 -0.165	240.0	+0.15 -0.15	14.5	16.0	4445810
225.0	-0.050 -0.165	250.0	+0.15 -0.15	18.2	20.0	4537510
230.0	-0.050 -0.165	249.3	+0.15 -0.15	14.5	16.0	4439410
230.0	-0.050 -0.165	255.0	+0.16 -0.16	22.8	25.0	4555510
240.0	-0.050 -0.165	260.0	+0.16 -0.16	14.5	16.0	4496510
245.0	-0.050 -0.165	270.0	+0.16 -0.16	18.2	20.0	4546710
260.0	-0.056 -0.186	280.0	+0.16 -0.16	16.4	18.0	4499010
285.0	-0.056 -0.186	310.0	+0.16 -0.16	18.2	20.0	4537610
290.0	-0.056 -0.186	310.0	+0.16 -0.16	16.4	18.0	4475110
305.0	-0.056 -0.186	325.0	+0.18 -0.18	16.4	18.0	4473010
305.0	-0.056 -0.186	330.0	+0.18 -0.18	18.2	20.0	4546810
325.0	-0.062 -0.212	355.0	+0.18 -0.18	18.2	20.0	4555710
335.0	-0.062 -0.212	355.0	+0.18 -0.18	16.4	18.0	4496610

* Supplied with profiled energiser - see Hallite 621

Rod seals

Hallite

652

TECHNICAL DETAILS

METRIC ○ — INCH ●

OPERATING CONDITIONS

MAXIMUM SPEED	1.0 m/sec	3.0 ft/sec
TEMPERATURE RANGE	-45°C + 110°C	-50°F + 230°F
MAXIMUM PRESSURE	700 bar	10,000 p.s.i.

MAXIMUM EXTRUSION GAP

Figures show the maximum permissible gap all on one side using minimum rod Ø and maximum clearance Ø.

PRESSURE bar	160	250	400	500	700
MAXIMUM GAP mm	1.0	0.8	0.6	0.4	0.25
PRESSURE p.s.i.	2400	3750	6000	7500	10,000

SURFACE ROUGHNESS

	µmRa	µmRt	µinCLA	µinRMS
DYNAMIC SEALING FACE $Ød_1$	0.1 ↔ 0.4	4 max	4 ↔ 16	5 ↔ 18
STATIC SEALING FACE $ØD_1$	1.6 max	10 max	63 max	70 max
STATIC HOUSING FACES L_1	3.2 max	16 max	125 max	140 max

CHAMFERS & RADII

GROOVE SECTION ≤ S mm	4.0	5.0	7.5	10.0	12.5	15.0
MIN CHAMFER C mm	3.0	3.5	5.0	6.5	7.0	8.0
MAX FILLET RAD r_1 mm	0.2	0.4	0.8	0.8	1.2	1.6
MAX FILLET RAD r_2 mm	0.4	0.8	1.2	1.2	1.6	2.4

TOLERANCES

$Ød_1$	$ØD_1$	L_1 mm
f9	Js11	+0.25 -0

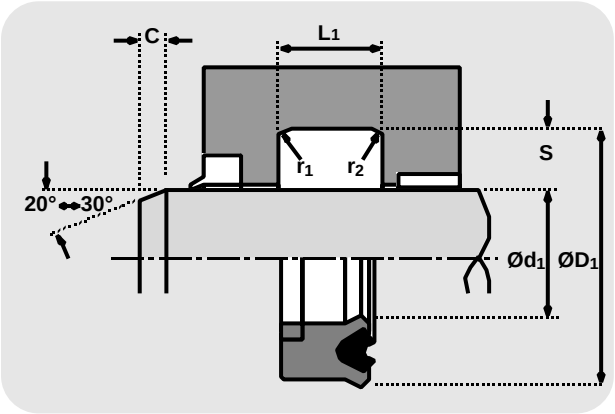

DESIGN

The Hallite 652 is a high pressure rod seal designed specifically for longwall mining applications. The seal design comprises three elements; a unique profiled NBR energiser*, a polyurethane shell and a polyacetal anti-extrusion ring.
The shell is manufactured in Hythane 181 to provide flexibility for installation and responsiveness to the sealing lip. The rubber energiser ensures complete lip actuation under all pressure conditions and cushions the seal against shock loadings. The anti-extrusion ring enables the seal to withstand side loads and extreme pressure peaks during operation, even with the extrusion gaps which are the result of using remote plastic bearing strips such as Hallite 506.

*In some cases an O ring energiser is used

FEATURES

- HIGH PRESSURE/SHOCK LOAD CAPABILITY
- POLYACETAL ANTI-EXTRUSION RING.
- RESPONSIVE SEALING

Rod seals

Hallite 652

metric

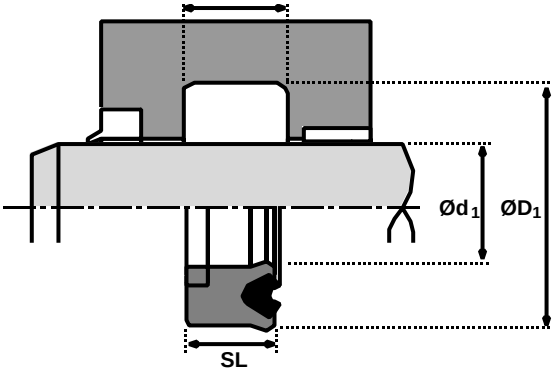

Ød1	TOL f9	ØD1	TOL Js11	SL	L1 +0.25-0	PART No.
40	-0.025 -0.087	52	+0.095 -0.095	8.7	9.6	4326311
50	-0.025 -0.087	62	+0.095 -0.095	8.7	9.6	4326411
56	-0.030 -0.104	71	+0.095 -0.095	11.4	12.5	4557110
60	-0.030 -0.104	69.8	+0.095 -0.095	11.4	12.5	4534910
60	-0.030 -0.104	72	+0.095 -0.095	8.7	9.6	4344211
60	-0.030 -0.104	75	+0.095 -0.095	11.9	13	4451211
63	-0.030 -0.104	75	+0.095 -0.095	8.7	9.6	4326511
70	-0.030 -0.104	82	+0.110 -0.110	8.7	9.6	4344311
75	-0.030 -0.104	95	+0.110 -0.110	12.5	14	4547810
80	-0.030 -0.104	95	+0.110 -0.110	14.5	16	4446511
90	-0.036 -0.123	105	+0.110 -0.110	14.5	16	4428011
100	-0.036 -0.123	115	+0.110 -0.110	11	12	4528010
100	-0.036 -0.123	115	+0.110 -0.110	14.5	16	4397611
105	-0.036 -0.123	120	+0.110 -0.110	11.8	13	4406711
110	-0.036 -0.123	125	+0.125 -0.125	14.5	16	4445611
115	-0.036 -0.123	130	+0.125 -0.125	14.5	16	4455411
125	-0.043 -0.143	140	+0.125 -0.125	14.5	16	4446911
135	-0.043 -0.143	155	+0.125 -0.125	13.6	15	4475410
150	-0.043 -0.143	165	+0.125 -0.125	14.5	16	4389111
160	-0.043 -0.143	175	+0.125 -0.125	11.7	12.8	4484010
160	-0.043 -0.143	175	+0.125 -0.125	14.5	16	4405011
160	-0.043 -0.143	177	+0.125 -0.125	12.3	13.5	4483110
165	-0.043 -0.143	182	+0.145 -0.145	14.5	16	4537411

Ød1	TOL f9	ØD1	TOL Js11	SL	L1 +0.25-0	PART No.
177	-0.043 -0.143	192	+0.145 -0.145	14.5	16	4445711
195	-0.050 -0.165	210	+0.145 -0.145	14.5	16	4459311
195	-0.050 -0.165	215	+0.145 -0.145	14.5	16	4550511
200	-0.050 -0.165	220	+0.145 -0.145	14.5	16	4387611
210	-0.050 -0.165	230	+0.145 -0.145	14.5	16	4472911
220	-0.050 -0.165	240	+0.145 -0.145	14.5	16	4544510
225	-0.050 -0.165	240	+0.145 -0.145	14.5	16	4445811
225	-0.050 -0.165	250	+0.145 -0.145	18	20	4537511
230	-0.050 -0.165	249.3	+0.160 -0.160	14.5	16	4439411
230	-0.050 -0.165	250	+0.160 -0.160	14.5	16	4707210
230	-0.050 -0.165	255	+0.160 -0.160	22.8	25	4555511
240	-0.050 -0.165	260	+0.160 -0.160	14.5	16	4496511
245	-0.050 -0.165	270	+0.160 -0.160	18	20	4546711
250	-0.056 -0.186	270	+0.160 -0.160		16	4728810
255	-0.056 -0.186	275	+0.160 -0.160	14.5	16	4578611
260	-0.056 -0.186	275	+0.160 -0.160	16.4	18	4499011
265	-0.056 -0.186	255	+0.160 -0.160	14.5	16	4722110
265	-0.056 -0.186	285	+0.160 -0.160		16	4722110
260	-0.056 -0.186	280	+0.160 -0.160	16.4	18	4499011
280	-0.056 -0.186	300	+0.160 -0.160	14.5	16	4713910
285	-0.056 -0.186	310	+0.160 -0.160	18	20	4537611
290	-0.056 -0.186	310	+0.160 -0.160	16.4	18	4475111
295	-0.056 -0.186	315	+0.160 -0.160	16.4	18	4598211

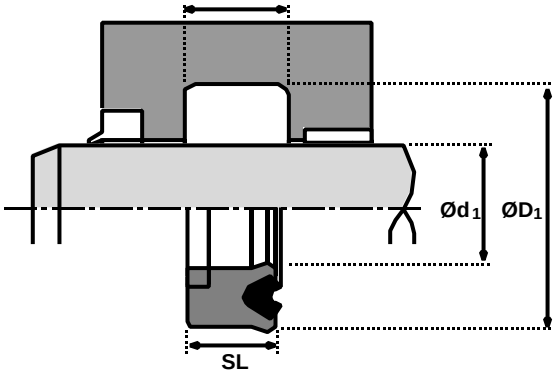

Rod seals

Hallite 652

metric

Ød1	TOL f9	ØD1	TOL Js11	SL	L1 +0.25-0	PART No.
300	-0.056 -0.186	320	+0.180 -0.180	14.5	16	4525110
305	-0.056 -0.186	325	+0.180 -0.180		18	4473011
305	-0.056 -0.186	330	+0.180 -0.180	18	20	4546811
305	-0.056 -0.186	335	+0.180 -0.180	16.5	18	4721910
320	-0.062 -0.202	340	+0.180 -0.180	14.5	16	4544410
320	-0.062 -0.202	340	+0.180 -0.180	16.4	18	4707310
325	-0.062 -0.202	355	+0.180 -0.180	18	20	4555711

Ød1	TOL f9	ØD1	TOL Js11	SL	L1 +0.25-0	PART No.
335	-0.062 -0.202	355	+0.180 -0.180	16.4	18	4496611
340	-0.062 -0.202	365	+0.180 -0.180	18	20	4732810
350	-0.062 -0.202	375	+0.180 -0.180	18	20	4718010
355	-0.062 -0.202	380	+0.180 -0.180	18	20	4578411
370	-0.062 -0.202	395	+0.180 -0.180	18	20	4579710
390	-0.062 -0.202	415	+0.180 -0.180	18	20	4730010

*** Indicates products fitted with an O ring energiser.**

Notes

Rod buffer seals

Hallite

653

TECHNICAL DETAILS

METRIC ○ INCH ●

OPERATING CONDITIONS

MAXIMUM SPEED	1.0 m/sec	3.0 ft/sec
TEMPERATURE RANGE	-45°C + 110°C	-50°F + 230°F
MAXIMUM PRESSURE	700 bar	10,000 p.s.i.

MAXIMUM EXTRUSION GAP

Figures show the maximum permissible gap all on one side using minimum rod Ø and maximum clearance Ø.

PRESSURE bar	160	250	400	500	700
MAXIMUM GAP (S <=6) mm	0.6	0.5	0.4	0.3	0.2
MAXIMUM GAP (S > 6) mm	1.0	0.8	0.6	0.4	0.25
PRESSURE p.s.i.	2400	3750	6000	7500	10,000
MAXIMUM GAP (S <=0.250) in	0.024	0.020	0.016	0.012	0.008
MAXIMUM GAP (S >0.250) in	0.040	0.032	0.024	0.016	0.010

SURFACE ROUGHNESS

	µmRa	µmRt	µinCLA	µinRMS
DYNAMIC SEALING FACE $Ød_1$	0.1 ↔ 0.4	4 max	4 ↔ 16	5 ↔ 18
STATIC SEALING FACE $ØD_1$	1.6 max	10 max	63 max	70 max
STATIC HOUSING FACES L_1	3.2 max	16 max	125 max	140 max

CHAMFERS & RADII

GROOVE SECTION ≤ S mm	3.75	5.50	7.75
MIN CHAMFER C mm	3.00	3.50	5.00
MAX FILLET RAD r_1 mm	0.50	0.70	1.20
GROOVE SECTION ≤ S in	0.150	0.215	0.306
MIN CHAMFER C in	0.093	0.125	0.156
MAX FILLET RAD r_1 in	0.020	0.028	0.047

TOLERANCES

	$Ød_1$	$ØD_1$	L_1
mm	f9	H11	+0.25 -0
in	f9	Js11	+0.010 -0

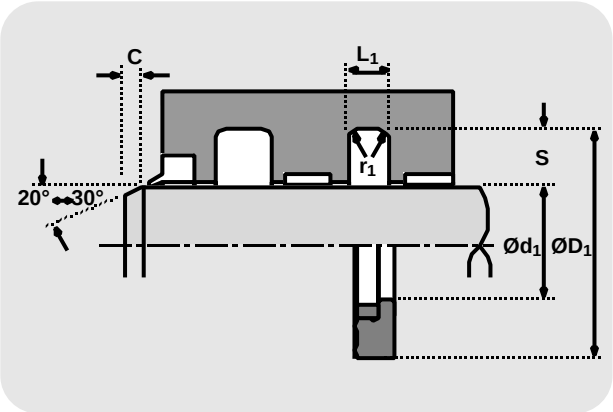

DESIGN

The Hallite 653 is a buffer seal developed to work in conjunction with high performance rod seals, such as the Hallite 605 and 621. It is also interchangeable with common PTFE buffer seal housings.

The seal, which is manufactured in Hythane 181, is designed to provide a valve action to prevent excessive pressure build up in the cavity between the buffer seal and the rod seal. An acetal anti- extrusion ring is fitted to provide maximum extrusion resistance against shock pressure loads.

The Hallite 653 is a patented product :
European patent no. 0427554BI.
U.S.A. patent no. 5088747.

FEATURES

- PREVENTS INTER-SEAL PRESSURE BUILD UP
- INTERCHANGEABLE WITH COMMON PTFE BUFFER SEAL HOUSINGS
- EASY INSTALLATION
- LONG LIFE
- EXCELLENT TEMPERATURE RANGE

Rod buffer seals

Hallite
653

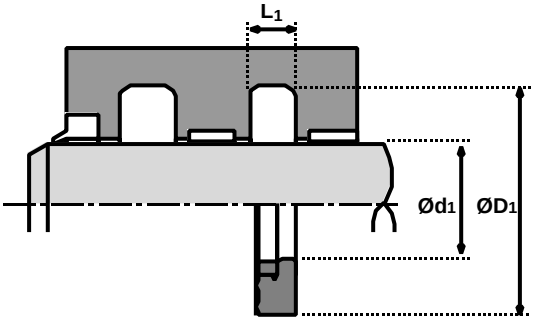

metric

Ød1	TOL f9	ØD1	TOL H11	L1 +0.25 -0	PART No.
45.0	-0.025 -0.087	56.0	+0.19 +0.00	4.2	4575510
50.0	-0.025 -0.087	65.5	+0.19 +0.00	6.3	4403210
55.0	-0.030 -0.104	70.5	+0.19 +0.00	6.3	4403310

Ød1	TOL f9	ØD1	TOL H11	L1 +0.25 -0	PART No.
60.0	-0.030 -0.104	75.5	+0.19 +0.00	6.3	4403410
90.0	-0.036 -0.123	105.5	+0.22 +0.00	6.3	4523710
215.0	-0.050 -0.165	236.0	+0.29 +0.00	8.1	4705710

inch

Ød1	TOL f9	ØD1	TOL Js11	L1 +0.010 -0	PART No.
2.000	-0.0012 -0.0041	2.424	+0.004 -0.004	0.166	4521310
2.500	-0.0012 -0.0041	2.924	+0.004 -0.004	0.166	4514610
2.750	-0.0012 -0.0041	3.174	+0.004 -0.004	0.166	4533510
3.000	-0.0012 -0.0041	3.616	+0.004 -0.004	0.247	4515910

Ød1	TOL f9	ØD1	TOL Js11	L1 +0.010 -0	PART No.
3.500	-0.0014 -0.0048	4.116	+0.004 -0.004	0.247	4514810
4.000	-0.0014 -0.0048	4.616	+0.004 -0.004	0.247	4524610
7.000	-0.0016 -0.0056	7.610	+0.006 -0.006	0.247	4588310

Flange seals

Hallite

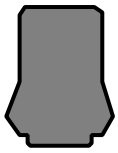

657

TECHNICAL DETAILS

METRIC ○ INCH ●

OPERATING CONDITIONS				
SPEED	Static		Static	
MAXIMUM TEMPERATURE	-45°C + 110°C		-50°F + 230°F	
MAXIMUM PRESSURE	600 bar		8500 p.s.i.	
SURFACE ROUGHNESS	µmRa	µmRt	µinCLA	µinRMS
SEALING FACES	0.8	6.3	32	35
MATING FACE	3	20 ↔ 30	120	120
RADII				
MAX FILLET RAD r_1 mm	0.80			
MAX FILLET RAD r_1 in	0.03			

TOLERANCES	$ØD_1$	S	L_1	L_2
mm	±0.100	±0.025	±0.050	+0 -0.25
in	+0.005 -0	±0.015	+0.005 -0	+0 -0.010

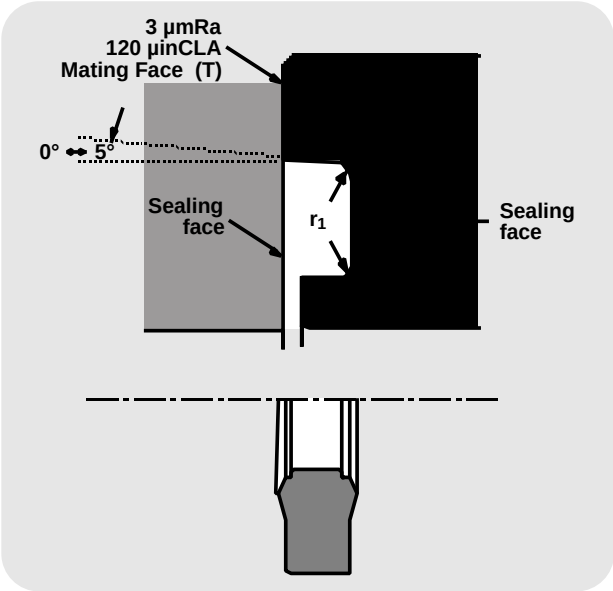

DESIGN

The Hallite 657 has been designed especially to fit SAE J518 flanges.
High pressure and pumping are common problems which prevent reliable sealing in applications where O rings are fitted. Hallite„s type 657 over comes these. Manufactured as standard in Hallite„s high quality Hythane 181, the material provides excellent extrusion resistance and is able to perform at both low and high temperatures. The seal„s profile is designed to ensure that pumping is prevented and to provide reliable sealing of the flange.

In addition to the high specification material, the Hallite 657 is also manufactured in an industrial standard polyurethane.

Please ensure that the correct part number is specified for the material option that is required. See left for details.

N.B. Also listed, two **non-SAE** seal sizes for metric flanges.

MATERIAL OPTIONS

Material	Last two digits of part number
Hythane	fi fi fi fi fi 00
93 IRHD Polyester Polyurethane (AU)	fi fi fi fi fi 01

NB. Temperature rating for 93 IRHD Polyester Polyurethane (AU) changes to:
-30°C +100°C -22°F +212°F

FEATURES

- HIGH SPECIFICATION MATERIAL
- INDUSTRIAL GRADE MATERIAL OPTION
- SAE FLANGE SIZES

Flange seals

Hallite 657

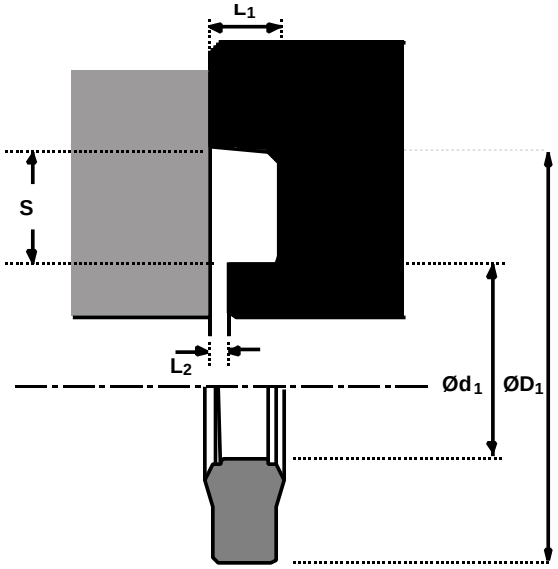

metric

ØD1	TOL	Ød1	S	TOL	L1	TOL	L2	TOL	PART No.
33.5	+0.100 -0.100	26.3	3.6	+0.025 -0.025	2.200	+0.050 -0.050	0.25	+0.000 -0.250	44328_ _
45.0	+0.100 -0.100	36.2	4.4	+0.025 -0.025	3.300	+0.050 -0.050	0.25	+0.000 -0.250	44912_ _

inch - SAE J518

NOMINAL (SAE J518)	ØD1	TOL	Ød1	S	TOL	L1	TOL	L2	TOL	PART No.
1/2	1.000	+0.005 -0.000	0.670	0.165	+0.010 -0.010	0.110	+0.005 -0.000	0.010	+0.000 -0.010	44909_ _
3/4	1.250	+0.005 -0.000	0.920	0.165	+0.010 -0.010	0.110	+0.005 -0.000	0.010	+0.000 -0.010	44910_ _
1	1.560	+0.005 -0.000	1.230	0.165	+0.010 -0.010	0.110	+0.005 -0.000	0.010	+0.000 -0.010	44911_ _
1 1/4	1.750	+0.005 -0.000	1.420	0.165	+0.010 -0.010	0.110	+0.005 -0.000	0.010	+0.000 -0.010	44220_ _
1 1/2	2.125	+0.010 -0.000	1.785	0.165	+0.010 -0.010	0.110	+0.005 -0.000	0.010	+0.000 -0.010	44221_ _
2	2.500	+0.010 -0.000	2.160	0.165	+0.010 -0.010	0.110	+0.005 -0.000	0.010	+0.000 -0.010	44222_ _

Piston seals

Hallite

659

TECHNICAL DETAILS

METRIC ○ — INCH ●

OPERATING CONDITIONS

MAXIMUM SPEED	1.0 m/sec	3.0 ft/sec
TEMPERATURE RANGE	-45°C + 110°C	-50°F + 230°F
MAXIMUM PRESSURE	400 bar	6000 p.s.i.

MAXIMUM EXTRUSION GAP

Figures show the maximum permissible gap all on one side using the minimum clearance Ø and maximum bore Ø

PRESSURE bar	160	250	400
MAXIMUM GAP mm	0.6	0.5	0.4
PRESSURE p.s.i.	2400	3750	6000
MAXIMUM GAP in	0.024	0.020	0.016

SURFACE ROUGHNESS

	µmRa	µmRt	µinCLA	µinRMS
DYNAMIC SEALING FACE $ØD_1$	0.1 ↔ 0.4	4 max	4 ↔ 16	5 ↔ 18
STATIC SEALING FACE $Ød_1$	1.6 max	10 max	63 max	70 max
STATIC HOUSING FACES L_1	3.2 max	16 max	125 max	140 max

CHAMFERS & RADII

GROOVE SECTION ≤ S mm	4.0	5.0	7.5
MIN CHAMFER C mm	3.0	3.5	5.0
MAX FILLET RAD r_1 mm	0.2	0.4	0.8
GROOVE SECTION ≤ S in	0.125	0.187	0.250
MIN CHAMFER C in	0.093	0.093	0.125
MAX FILLET RAD r_1 in	0.008	0.008	0.016

TOLERANCES

	$ØD_1$	$Ød_1$	L_1
mm	H9	js11	+0.25 -0
in	+0.004 -0	0 -0.002	+0.010 -0

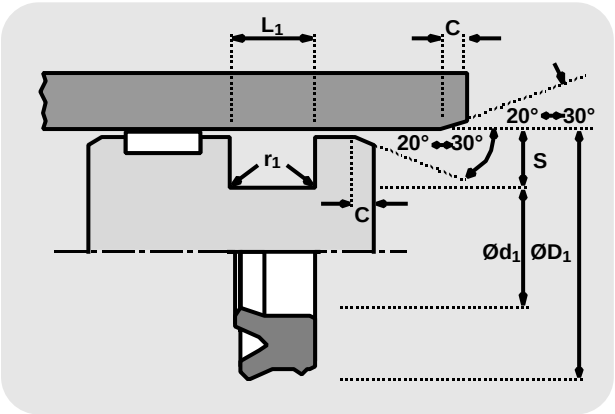

FEATURES

- FLEXIBLE FOR EASY INSTALLATION
- EXCELLENT WEAR RESISTANCE
- HIGH RESISTANCE TO EXTRUSION
- WIDE TEMPERATURE RANGE
- TWIN LIP DESIGN FOR:
  IMPROVED SEALING
  LOWER FRICTION
  INCREASED SEAL STABILITY
  PRIMARY LIP PROTECTION

DESIGN

The Hallite 659 is an asymmetric piston seal designed to offer effective bore sealing in a wide variety of applications.

The outer *dynamic* lip is shorter and more robust to provide improved sealing and compression set characteristics over conventional U rings. The seal also features a secondary lip that provides a pocket for lubrication as well as the benefits listed below.

For use in single acting applications only, the seal is manufactured in Hallite's high performance polyurethane Hythane 181. The Hallite 659 provides the following benefits:

Note: Variations of this seal are available in other sizes, please contact your local Hallite sales office for additional information and technical details.

Piston seals

Hallite

659

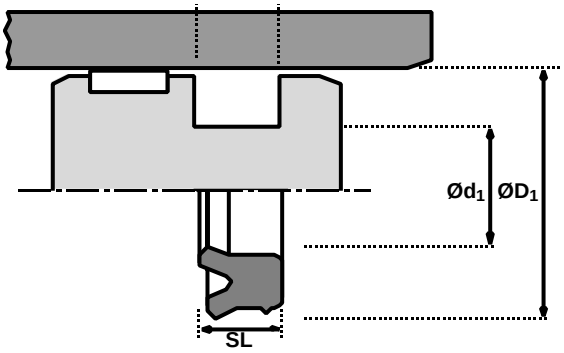

metric

ØD1	TOL H9	Ød1	TOL js11	SL	L1 + 0.25 -0	PART No.
100.00	+0.09 +0.00	80.00	+0.11 -0.11	14.50	16.00	4580300

ØD1	TOL H9	Ød1	TOL js11	SL	L1 + 0.25 -0	PART No.
110.00	+0.09 +0.00	90.00	+0.11 -0.11	14.50	16.00	4580400

inch

ØD1	TOL	Ød1	TOL	SL	L1 + 0.010 -0	PART No.
1.250	+0.004 -0.000	1.000	+0.000 -0.002	0.171	0.187	4416600
1.500	+0.004 -0.000	1.250	+0.000 -0.002	0.187	0.205	4372400
1.750	+0.004 -0.000	1.250	+0.000 -0.002	0.375	0.413	4528600
2.000	+0.004 -0.000	1.630	+0.000 -0.002	0.250	0.281	4563300Δ
2.375	+0.004 -0.000	1.750	+0.000 -0.002	0.437	0.481	4528500
2.500	+0.004 -0.000	2.130	+0.000 -0.002	0.250	0.281	4563400Δ
3.000	+0.004 -0.000	2.250	+0.000 -0.002	0.500	0.550	4528400
3.000	+0.004 -0.000	2.630	+0.000 -0.002	0.250	0.281	4563500Δ

ØD1	TOL	Ød1	TOL	SL	L1 + 0.010 -0	PART No.
3.500	+0.004 -0.000	3.130	+0.000 -0.002	0.250	0.281	4563600Δ
3.625	+0.004 -0.000	2.875	+0.000 -0.002	0.562	0.618	4528300
4.000	+0.004 -0.000	3.630	+0.000 -0.002	0.250	0.281	4563700Δ
4.250	+0.004 -0.000	3.500	+0.000 -0.002	0.562	0.618	4528200
5.000	+0.004 -0.000	4.000	+0.000 -0.002	0.731	0.804	4528100
6.000	+0.004 -0.000	5.000	+0.000 -0.002	0.731	0.804	4530200
7.000	+0.004 -0.000	6.000	+0.000 -0.002	0.731	0.804	4529700

Δ Denotes parts designed to fit inch standard O ring grooves.

Piston Seal

Hallite 714

Hallite Seals International Limited
130 Oldfield Road, Hampton
Middlesex. TW12 2HT
Tel : 020 8941 2244
Fax : 020 8783 1669
e-mail: seals@hallite.co.uk

Australia
Hallite Seals Australia Pty Limited
1/1 St.James Place
Seven Hills, N.S.W. 2147
(PO Box 91)
Tel : 02 9620 7300
Fax : 02 9620 7400
e-mail: seals@hallite.com.au

Canada
Hallite Seals (Canada) Limited
83 Galaxy Boulevard. # 12
Toronto, Ontario.
Canada. M9W 6A4
Tel : (416) 675 2505
Fax : (416) 675 4341
e-mail: seals@hallite.ca

France
Hallite (France) Limited
Z.A. Les Petits Carreaux, 1 Av Des Lys
94385 Bonneuil-sur-marne, Cedex.
Tel : 01 43 77 85 50
Fax : 01 43 77 93 93
e-mail: seals@hallite.fr

Germany
Dichtelemente Hallite GmbH
Billwerder Ring 17
21035 Hamburg
Tel : (040) 73 47 48-0
Fax : (040) 73 47 48 49
e-mail: seals@hallite.de

Italy
Hallite Italia S.r.l.
Via Umbria, 33
57017 Stagno - Collesalvetti
(Livorno) Italia.
Tel : 0586 943666
Fax : 0586 943700
e-mail: seals@hallite.it

USA
Hallite Seals Inc.
3820 Merchant Road
Fort Wayne, Indiana. 46818
Tel : (219) 489 0002
Fax : (219) 489 5119
e-mail: seals@hallite-usa.com

www.hallite.co.uk

All our activities conform to the highest quality assurance systems. Hallite Seals International quality management systems are accredited to ISO 9001 and are approved by many of the world„s foremost OEM„s.

	INCH	METRIC
MAX. SPEED	6.0 ft/sec	2.0 m/sec
TEMPERATURE RANGE	-40°F + 230°F	-40°C + 110°C
MAX. PRESSURE	7300 p.s.i.	500 bar

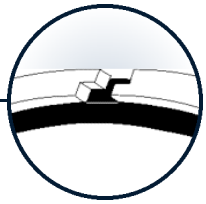

FEATURES

- Face expands for easy installation
- Passes over ports
- Excellent wear & abrasion resistance
- Static load holding capability
- Replaces multiple piston rings
- Increases cylinder effectiveness
- Ideal for re-phasing cylinders
- Ingests contamination
- Compact housing

Standard Materials

Sealing face

Thermoplastic

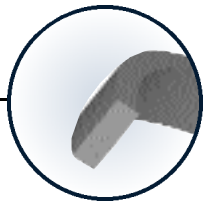

Energiser

NBR

The Hallite 714 is a double acting seal capable of passing over ports. The reinforced, heat stabilised, thermoplastic sealing face, expands and contracts to fill the gap between the piston and the cylinder wall and has a step-cut joint for ease of installation.

It will tolerate a considerable extrusion gap, thus reducing the possibility of piston-to-bore contact, and it offers excellent static load holding capability.

The square section nitrile rubber energiser responds quickly to pressure changes, providing excellent sealing characteristcs under all pressure conditions.

For further information, including non-standard material options available, please contact your local Hallite Seals sales office.

Profiles of actual seals may differ from those illustrated.

Hallite's commitment to continuous product development means that specifications may sometimes change without notice.

A subsidiary of Wellington Holdings

F0A20H010H

Standard Unitized Piston

Hallite 720

For over 30 years the world's largest equipment manufacturers have been able to take advantage of our Unitized Piston to enhance their hydraulic cylinder performance and eliminate the need to stock and assemble piston seals and wear rings. This special technology is now available to all cylinder builders with the Hallite 720 Standard Unitized Piston. The Hallite 720 is an excellent problem solver for:

- Man/Aerial Lifts
- Construction Equipment
- Industrial Cylinders
- Mobile Equipment

The Hallite 720 is a complete, self-contained piston, bearing and seal in one assembly that can solve difficult assembly problems or be used as a cost effective alternative to the traditional piston assembly with a separately fitted seal and bearing.

Commercial Features

- **Separate piston, seal and bearing part numbers are replaced by one simple seven digit part number.**
- **No need or lead-time for sub assembly. The piston is ready to install.**
- **Multiple quality inspections are reduced or completely eliminated.**
- **Procurement is simple. One purchase order delivers a piston ready for work.**

Technical Features

- **Maximum bearing surface area for the piston length**
- **Side load capacity increase**
- **Improves supply chain management**
- **Less affected by fluid contamination**
- **Product improvement**
- **Extended seal life**
- **Helps increase manufacturing capacity**
- **Eliminates metal-to-metal contact**
- **Reduces warranty claims**
- **Works on a variety of cylinder bore finishes**
- **Reduces inventory**
- **Compact design enables increase in stroke or reduction in overall cylinder length**

A Standard Seal

The Hallite 720 is engineered to be a ready-made, off-the-shelf product that can be fitted to a range of applications. For this reason, the Standard Unitized Piston uses a proprietary low friction filled PTFE seal that has been proven in the Unitized Piston for many years.

Extended Seal Life

The Hallite 720 provides improved stability and has smaller extrusion gaps that extend the life of the piston seal. Molding the bearing material over the outer diameter gives an extremely tight fit between the piston and the cylinder inner diameter. The piston diameter is tightly controlled, reducing the number of critical tolerance variables resulting in increased performance.

All our activities conform to the highest quality assurance systems. Hallite Seals Internationalquality management systems are accredited to ISO 9001 and are approved by many

Hallite 720

ERATING CONDITIONS

INCH

Temperature Range	-40ºF to 275ºF
Max Pressure	5,000 p.s.i
Max Speed	3 ft/sec

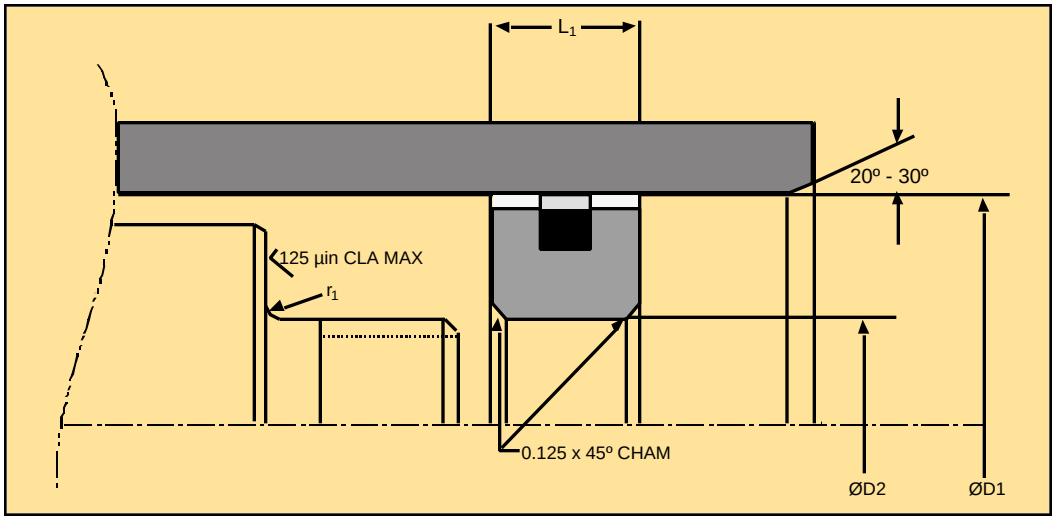

Housing Diagram

erials

materials used for the Standard Unitized Piston are selected to handle a broad range of applicaion
neters.

constructed using four components:

- High strength steel body
- Non-metallic bearing
- Rubber loading ring
- Filled PTFE seal ring

piston body is machined to exact dimensions. The non-metallic bearing material is molded to the piston
; a special proprietary process. It is then machined to the final precise OD dimension and the seal is
lled. It is ready supplied for use in a cylinder.

ering

ith other Hallite products, the Standard Unitized Piston can be described by its product group code 720 and
can be ordered by their short seven digit part number. Custom sizing, including alternative seals, can be
ded on request.

Piston Seals

Hallite

735

TECHNICAL DETAILS

METRIC ○ — INCH ●

OPERATING CONDITIONS

MAXIMUM SPEED	1.5 m/sec	4.5 ft/sec
TEMPERATURE RANGE	-40°C +120°C	-40°F + 250°F
MAXIMUM PRESSURE	500 bar	7500 p.s.i.

MAXIMUM EXTRUSION GAP

Figures show the maximum permissible gap all on one side using the minimum clearance Ø and maximum bore Ø

PRESSURE bar	160	250	400	500
MAXIMUM GAP mm	1.0	0.8	0.6	0.5
PRESSURE p.s.i.	2400	3750	6000	7500
MAXIMUM GAP in	0.040	0.030	0.024	0.020

SURFACE ROUGHNESS

	µmRa	µmRt	µinCLA	µinRMS
DYNAMIC SEALING FACE $ØD_1$	0.1 ↔ 0.4	4 max	4 ↔ 16	5 ↔ 18
STATIC SEALING FACE $Ød_1$	1.6 max	10 max	63 max	70 max
STATIC HOUSING FACES L_1	3.2 max	16 max	125 max	140 max

CHAMFERS & RADII

GROOVE SECTION ≤ S mm	7.0	7.5	11.5	14.0
MIN CHAMFER C mm	4.0	5.0	7.0	8.0
MAX FILLET RAD r_1 mm	0.8	0.8	0.8	0.8
GROOVE SECTION ≤ S in	0.187	0.240	0.365	0.470
MIN CHAMFER C in	0.160	0.200	0.250	0.280
MAX FILLET RAD r_1 in	0.016	0.016	0.035	0.035

TOLERANCES

	$ØD_1$	$Ød_1$	L_1
mm	H9	+0 -0.2	+0.2 -0
in	H9	*see below	+0.01 -0

$ØD_1$ in	≤ 3.000	≤ 4.500	≥ 4.500
*$Ød_1$ Tol =	+0 - 0.002	+0 - 0.003	+0 - 0.004

***NB** Part numbers 710600_ and 710800_ Tol = ±0.003

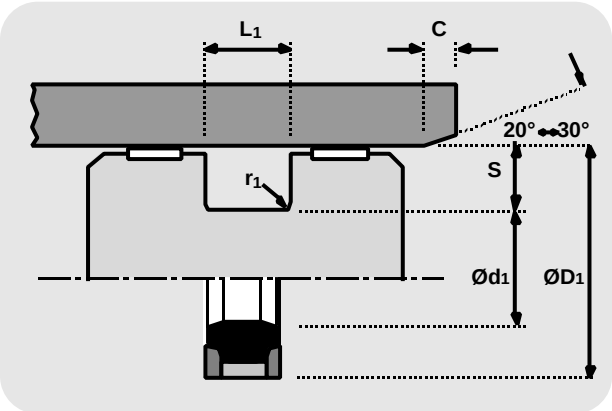

MATERIALS

Please ensure the correct part number is used for the required cap ring.

PTFE, 40% bronze
Last digit of part no. _ _ _ _ _ _ 0

or

PTFE, 15% glass 5% MoS_2
Last digit of part no. _ _ _ _ _ _ 1

Products suffixed † are designed to suit popular Asian housings

For information about other material options available, please contact your local Hallite Seals office.

DESIGN

Hallite„s 735 is a compact double acting piston seal assembly designed for one piece pistons and is suitable for low to high pressure, medium to heavy duty applications. The assembly comprises as standard a self lubricating wear resistant bronze filled or glass / MoS_2 filled PTFE cap ring, which is loaded by a NBR energiser. Thermoplastic split anti-extrusion rings support the seal on both sides and prevent contamination of the the energiser and cap ring.

Hallite„s 735 piston seal is designed to be used in a variety of equipment and is particularly suited to use in earthmoving and other off-highway equipment.

The range consists of seals to suit popular North American and Asian housings.

FEATURES

- HIGH PRESSURE
- HEAVY DUTY
- PTFE CAP RING
- COMPACT DESIGN
- LOW FRICTION
- LONG LIFE
- RANGE OF MATERIAL OPTIONS TO EXTEND SERVICE TEMPERATURE RANGE

Piston seals

Hallite 735

metric

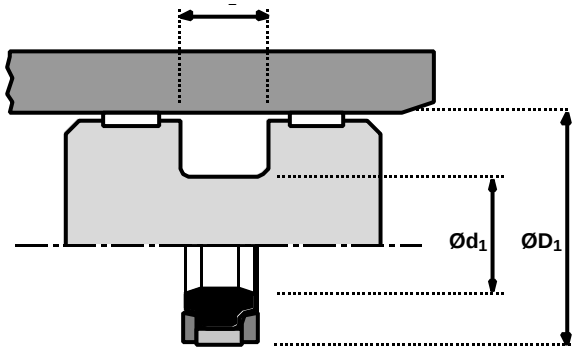

ØD1	TOL H9	Ød1	TOL	L1 +0.2 -0 .0	PART No.
50	+0.06 +0.00	36	+0.00 -0.20	9.0	715100_†
60	+0.07 +0.00	46	+0.00 -0.20	9.0	715150_†
63	+0.07 +0.00	48	+0.00 -0.20	11.0	715200_†
65	+0.07 +0.00	50	+0.00 -0.20	11.0	715250_†
70	+0.07 +0.00	55	+0.00 -0.20	11.0	715300_†
75	+0.07 +0.00	60	+0.00 -0.20	11.0	715350_†
80	+0.07 +0.00	65	+0.00 -0.20	11.0	715400_†
85	+0.09 +0.00	70	+0.00 -0.20	11.0	715450_†
90	+0.09 +0.00	75	+0.00 -0.20	11.0	715500_†
95	+0.09 +0.00	80	+0.00 -0.20	11.0	715550_†
100	+0.09 +0.00	85	+0.00 -0.20	12.5	715600_†
105	+0.09 +0.00	90	+0.00 -0.20	12.5	715650_†
110	+0.09 +0.00	95	+0.00 -0.20	12.5	715700_†
115	+0.09 +0.00	100	+0.00 -0.20	12.5	715750_†
120	+0.09 +0.00	105	+0.00 -0.20	12.5	715800_†
125	+0.10 +0.00	102	+0.00 -0.20	16.0	715850_
130	+0.10 +0.00	107	+0.00 -0.20	16.0	715900_†
135	+0.10 +0.00	112	+0.00 -0.20	16.0	715950_†
140	+0.10 +0.00	117	+0.00 -0.20	16.0	716000_†

ØD1	TOL H9	Ød1	TOL	L1 +0.2 -0 .0	PART No.
145	+0.10 +0.00	122	+0.00 -0.20	16.0	716050_†
150	+0.10 +0.00	127	+0.00 -0.20	16.0	716100_†
160	+0.10 +0.00	137	+0.00 -0.20	16.0	716150_†
165	+0.10 +0.00	142	+0.00 -0.20	16.0	716200_†
170	+0.10 +0.00	147	+0.00 -0.20	16.0	716250_†
175	+0.10 +0.00	152	+0.00 -0.20	16.0	716280_†
180	+0.10 +0.00	157	+0.00 -0.20	16.0	716300_†
185	+0.12 +0.00	162	+0.00 -0.20	16.0	716350_†
190	+0.12 +0.00	167	+0.00 -0.20	16.0	716400_†
200	+0.12 +0.00	177	+0.00 -0.20	16.0	716450_†
210	+0.12 +0.00	187	+0.00 -0.20	16.0	716500_†
215	+0.12 +0.00	192	+0.00 -0.20	16.0	716530_†
220	+0.12 +0.00	197	+0.00 -0.20	16.0	716550_†
225	+0.12 +0.00	202	+0.00 -0.20	16.0	716600_†
230	+0.12 +0.00	207	+0.00 -0.20	16.0	716650_†
240	+0.12 +0.00	217	+0.00 -0.20	16.0	716700_†
250	+0.12 +0.00	222	+0.00 -0.20	17.5	716750_†
260	+0.13 +0.00	232	+0.00 -0.20	17.5	716800_†
350	+0.14 +0.00	322	+0.00 -0.20	17.5	716950_†

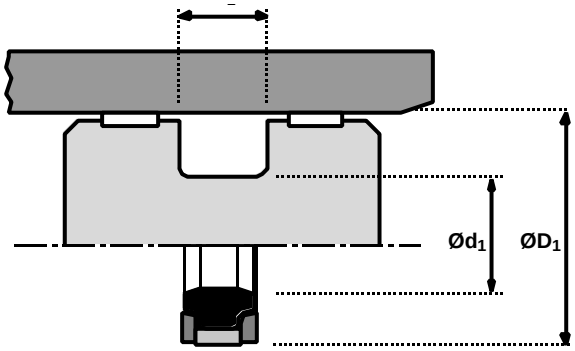

Piston seals

Hallite 735

inch

ØD1	TOL H9	Ød1	TOL	L1 +0.010 -0 .000	PART No.
1.750	+0.002 -0.000	1.377	+0.000 -0.002	0.424	710030_
2.000	+0.002 -0.000	1.627	+0.000 -0.002	0.424	710050_
2.500	+0.002 -0.000	2.127	+0.000 -0.002	0.424	710070_
3.000	+0.003 -0.000	2.522	+0.000 -0.003	0.579	710100_
3.250	+0.003 -0.000	2.772	+0.000 -0.003	0.579	710150_
3.500	+0.003 -0.000	3.022	+0.000 -0.003	0.579	710200_
3.750	+0.003 -0.000	3.272	+0.000 -0.003	0.579	710250_
4.000	+0.003 -0.000	3.522	+0.000 -0.003	0.579	710300_
4.250	+0.003 -0.000	3.772	+0.000 -0.003	0.579	710350_
4.500	+0.003 -0.000	3.909	+0.000 -0.003	0.492	710390_
4.500	+0.003 -0.000	4.022	+0.000 -0.003	0.579	710400_
4.750	+0.004 -0.000	4.159	+0.000 -0.003	0.492	710420_
5.000	+0.004 -0.000	4.094	+0.000 -0.003	0.630	710440_
5.000	+0.004 -0.000	4.274	+0.000 -0.004	0.750	710450_
5.250	+0.004 -0.000	4.524	+0.000 -0.004	0.750	710500_
5.500	+0.004 -0.000	4.594	+0.000 -0.004	0.630	710540_
5.500	+0.004 -0.000	4.774	+0.000 -0.004	0.750	710550_
5.500	+0.004 -0.000	5.022	+0.000 -0.003	0.579	710600_
6.000	+0.004 -0.000	5.094	+0.000 -0.004	0.630	710640_
6.000	+0.004 -0.000	5.274	+0.000 -0.004	0.750	710650_
6.250	+0.004 -0.000	5.344	+0.000 -0.004	0.630	710680_
6.250	+0.004 -0.000	5.772	+0.000 -0.004	0.579	710690_
6.250	+0.004 -0.000	5.524	+0.000 -0.004	0.750	710700_
6.250	+0.004 -0.000	5.772	+0.000 -0.004	0.579	710690_

ØD1	TOL H9	Ød1	TOL	L1 +0.010 -0 .000	PART No.
6.500	+0.004 -0.000	5.594	+0.000 -0.004	0.630	710740_
6.500	+0.004 -0.000	5.774	+0.000 -0.004	0.750	710750_
6.500	+0.004 -0.000	6.022	+0.000 -0.003	0.579	710800_
7.000	+0.004 -0.000	6.094	+0.000 -0.004	0.630	710840_
7.000	+0.004 -0.000	6.274	+0.000 -0.004	0.750	710850_
7.250	+0.005 -0.000	6.344	+0.000 -0.004	0.630	710860_
7.500	+0.005 -0.000	6.594	+0.000 -0.004	0.630	710890_
7.500	+0.005 -0.000	6.774	+0.000 -0.004	0.750	710900_
7.750	+0.005 -0.000	6.844	+0.000 -0.004	0.630	710920_
8.000	+0.005 -0.000	7.274	+0.000 -0.004	0.750	710950_
8.250	+0.005 -0.000	7.344	+0.000 -0.004	0.630	710970_
8.500	+0.005 -0.000	7.594	+0.000 -0.004	0.630	710990_
8.500	+0.005 -0.000	7.774	+0.000 -0.004	0.750	711000_
9.000	+0.005 -0.000	8.274	+0.000 -0.004	0.750	711050_
10.000	+0.005 -0.000	8.898	+0.000 -0.004	0.687	711090_
10.000	+0.005 -0.000	9.275	+0.000 -0.004	0.750	711100_
10.500	+0.005 -0.000	9.398	+0.000 -0.004	0.687	711120_
11.000	+0.005 -0.000	10.275	+0.000 -0.004	0.750	711150_
11.500	+0.005 -0.000	10.398	+0.000 -0.004	0.687	711170_
12.000	+0.005 -0.000	11.275	+0.000 -0.004	0.750	711200_
12.500	+0.005 -0.000	11.775	+0.000 -0.004	0.750	7112201
14.000	+0.005 -0.000	12.898	+0.000 -0.004	0.687	711270_
15.000	+0.005 -0.000	14.275	+0.000 -0.004	0.750	711300_

Notes

Piston seals

Hallite

753

TECHNICAL DETAILS

METRIC ○ — INCH ●

OPERATING CONDITIONS

MAXIMUM SPEED	0.5 m/sec	1.5 ft/sec
TEMPERATURE RANGE	-30°C + 100°C	-22°F + 212°F
MAXIMUM PRESSURE	400 bar	5000 p.s.i.

SURFACE ROUGHNESS

	µmRa	µmRt	µinCLA	µinRMS
DYNAMIC SEALING FACE $ØD_1$	0.1 ↔ 0.4	4 max	4 ↔ 16	5 ↔ 18
STATIC SEALING FACE $Ød_1$ $Ød_2$	1.6 max	10 max	63 max	70 max
STATIC HOUSING FACES $Ød_3$ L_1 L_2	3.2 max	16 max	125 max	140 max

CHAMFERS & RADII

GROOVE SECTION ≤ S mm	5.0	7.5	8.0	10.0	12.5	15.0
MIN CHAMFER C_1 mm	4.0	4.0	5.0	5.0	6.5	7.5
MAX FILLET RAD r_1 mm	0.2	0.2	0.4	0.4	0.4	0.8
MAX FILLET RAD r_2 mm	0.2	0.2	0.2	0.2	0.2	0.4

TOLERANCES

	$ØD_1$	$Ød_1$	$Ød_2$	$Ød_3$	L_1	L_2
mm	H11	h10	f9	h11	+0.4	+0.1 -0

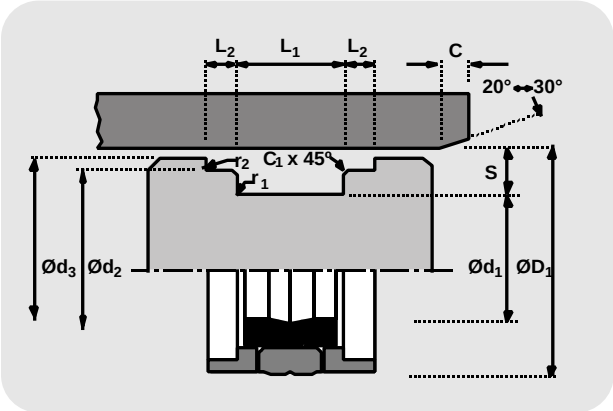

PROFILE A PROFILE B

Hallite 753 is manufactured using two different profiles as illustrated above. The parts list clearly indicates which profile is used for each size.

DESIGN

The Hallite 753 is a compact assembly designed and developed specifically for one piece pistons.

The assembly comprises a wear-resistant polyurethane slip ring which is loaded by an NBR ring. There are split 'L' shaped anti-extrusion bearings made from polyacetal resin on both sides of the seal.

The proportions of the range have been determined to give a satisfactory performance when used with the recommended operating conditions.

FEATURES

- LONG LIFE - DUE TO THE WEAR-RESISTANT POLYURETHANE SLIP RINGS
- EASY INSTALLATION

Piston seals

Hallite 753

metric

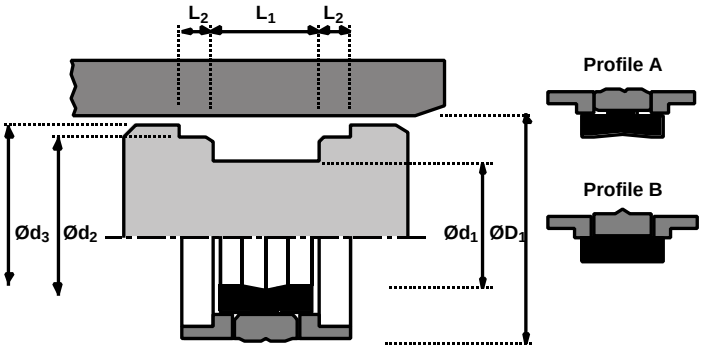

ØD1	TOL H11	Ød1	TOL h10	Ød2	TOL f9	Ød3	TOL h11	L1 + 0.4	L2 + 0.1 - 0	PROFILE	PART No.
40	+0.16 +0.00	26	+0.00 -0.08	39.00	-0.025 -0.087	36.00	+0.00 -0.16	15.5	2.60	B	6916500
40	+0.16 +0.00	30	+0.00 -0.08	36.50	-0.025 -0.087	39.00	+0.00 -0.16	10.0	5.00	A	6915100*
50	+0.16 +0.00	34	+0.00 -0.10	46.00	-0.025 -0.087	49.00	+0.00 -0.16	20.5	3.10	B	6916600
50	+0.16 +0.00	34	+0.00 -0.10	45.40	-0.025 -0.087	48.50	+0.00 -0.16	18.4	6.35	A	6915200
60	+0.19 +0.00	44	+0.00 -0.10	56.00	-0.030 -0.104	58.50	+0.00 -0.19	20.5	3.10	A	6916300
60	+0.19 +0.00	44	+0.00 -0.10	55.40	-0.030 -0.104	58.50	+0.00 -0.19	18.4	6.35	A	8672110
63	+0.19 +0.00	47	+0.00 -0.10	58.40	-0.030 -0.104	61.50	+0.00 -0.19	18.4	6.35	A	6915300
63	+0.19 +0.00	47	+0.00 -0.06	59.00	-0.030 -0.104	62.00	+0.00 -0.19	20.5	3.10	A	6916100
65	+0.19 +0.00	49	+0.00 -0.10	61.00	-0.030 -0.104	64.00	+0.00 -0.19	20.5	3.10	B	6916700
70	+0.19 +0.00	50	+0.00 -0.10	64.20	-0.030 -0.104	68.30	+0.00 -0.19	22.4	6.35	A	6915400
70	+0.19 +0.00	54	+0.00 -0.12	66.00	-0.030 -0.104	69.00	+0.00 -0.19	20.5	3.10	B	6916800
80	+0.19 +0.00	60	+0.00 -0.12	74.15	-0.030 -0.104	78.30	+0.00 -0.19	22.4	6.35	A	6915500
80	+0.19 +0.00	62	+0.00 -0.12	76.00	-0.030 -0.104	79.00	+0.00 -0.19	22.4	3.60	B	6916400
80	+0.19 +0.00	62	+0.00 -0.12	76.00	-0.030 -0.104	79.00	+0.00 -0.19	22.5	3.60	A	6916000
90	+0.22 +0.00	70	+0.00 -0.12	84.15	-0.036 -0.123	88.30	+0.00 -0.22	22.4	6.35	A	6915600
90	+0.22 +0.00	72	+0.00 -0.12	86.00	-0.036 -0.123	89.00	+0.00 -0.22	22.5	3.60	B	6916900
100	+0.22 +0.00	75	+0.00 -0.12	93.15	-0.036 -0.123	98.00	+0.00 -0.22	22.4	6.35	A	6915700
110	+0.22 +0.00	85	+0.00 -0.14	103.10	-0.036 -0.123	108.00	+0.00 -0.22	22.4	6.35	A	6915800
125	+0.25 +0.00	100	+0.00 -0.14	118.10	-0.036 -0.123	123.00	+0.00 -0.25	25.4	6.35	A	6915900
125	+0.25 +0.00	103	+0.00 -0.14	121.00	-0.042 -0.143	124.00	+0.00 -0.25	26.5	5.10	B	6917000
125	+0.25 +0.00	103	+0.00 -0.14	121.00	-0.042 -0.143	124.00	+0.00 -0.25	26.5	5.10	A	6919800
140	+0.25 +0.00	118	+0.00 -0.14	136.00	-0.042 -0.143	139.00	+0.00 -0.25	26.5	5.10	A	2356010
150	+0.25 +0.00	128	+0.00 -0.14	146.00	-0.042 -0.143	149.00	+0.00 -0.25	26.5	5.10	A	2349910

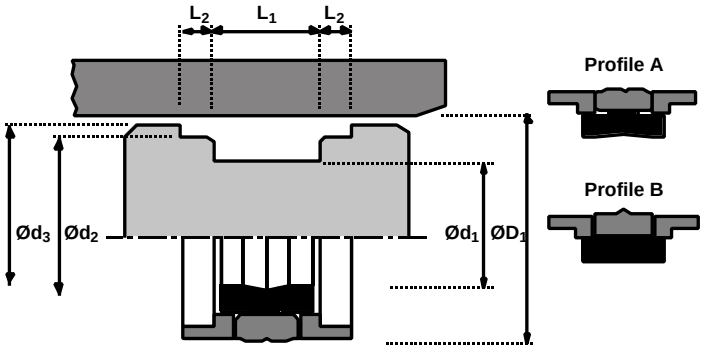

Piston seals

Hallite 753

metric

ØD1	TOL H11	Ød1	TOL h10	Ød2	TOL f9	Ød3	TOL h11	L1 + 0.4	L2 + 0.1 - 0	PROFILE	PART No.
160	+0.25 +0.00	138	+0.00 -0.14	156.00	-0.042 -0.143	159.00	+0.00 -0.25	26.5	5.10	A	2349810
165	+0.25 +0.00	143	+0.00 -0.14	161.00	-0.042 -0.143	164.00	+0.00 -0.25	26.5	5.10	A	2362310
180	+0.25 +0.00	158	+0.00 -0.16	176.00	-0.042 -0.143	179.00	+0.00 -0.25	26.5	5.10	A	2349510
200	+0.29 +0.00	175	+0.00 -0.16	196.00	-0.050 -0.165	199.00	+0.00 -0.29	31.5	6.60	A	2347010
250	+0.29 +0.00	220	+0.00 -0.18	242.90	-0.050 -0.165	247.85	+0.00 -0.29	35.4	6.35	A	2340710

*** OWING TO THE SEAL SECTION, DIAMETER 40 IS MANUFACTURED USING ONLY 3 PARTS**

Notes

Piston seals

Hallite

754

TECHNICAL DETAILS

METRIC ○ — INCH ●

OPERATING CONDITIONS

MAXIMUM SPEED	1.0 m/sec	3.0 ft/sec
TEMPERATURE RANGE	-40°C + 110°C	-40°F + 230°F
MAXIMUM PRESSURE	350 bar	5000 p.s.i.

MAXIMUM EXTRUSION GAP

Figures show the maximum permissible gap all on one side using the minimum clearance Ø and maximum bore Ø

PRESSURE bar	100	160	250	350
MAXIMUM GAP (S>7) mm	1.0	0.8	0.6	0.4
MAXIMUM GAP (S<7) mm	0.8	0.6	0.5	0.3
PRESSURE p.s.i.	1500	2400	3750	5000

SURFACE ROUGHNESS

	µmRa	µmRt	µinCLA	µinRMS
DYNAMIC SEALING FACE $ØD_1$	0.1 ↔ 0.4	4 max	4 ↔ 16	5 ↔ 18
STATIC SEALING FACE $Ød_1$	1.6 max	10 max	63 max	70 max
STATIC HOUSING FACES L_1	3.2 max	16 max	125 max	140 max

CHAMFERS & RADII

GROOVE SECTION ≤ S mm	3.75	5.50	7.50	10.50
MIN CHAMFER C mm	2.00	2.50	5.00	5.00
MAX FILLET RAD r_1 mm	0.40	0.80	1.20	1.60

TOLERANCES

	$ØD_1$	$Ød_1$	L_1
mm	H9	f8	+0.2 -0

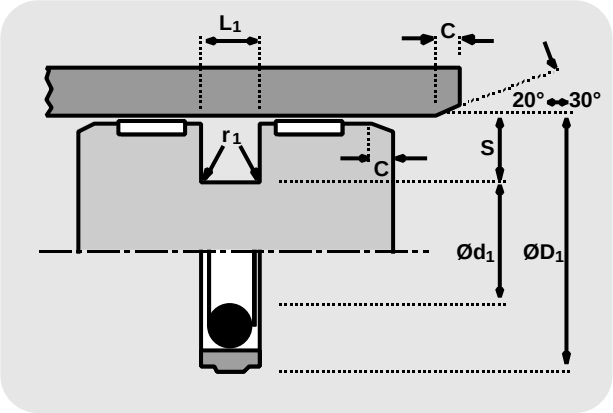

DESIGN

The Hallite 754 double acting piston seal is a compact low friction seal for light to medium duty hydraulic cylinders. As standard, it comprises a tough, wear resistant thermoplastic elastomer face, (see left for face material options) which is pre-loaded by an O ring. The housing width allows a narrow width piston to be used, but it is recommended that an adequate bearing is mounted on one or both sides of the seal. Housing dimensions for use with Hallite 87 and 506 bearing strip are given in the installation details. For further details of bearing strip grooves, please refer to the appropriate data sheets.

NB: Part numbers suffixed by ‡‡" indicate housing sizes to meet ISO 7425-1.

MATERIAL OPTIONS

Face material

Polyester elastomer - standard (Red 55D)
Last digit of part no. _ _ _ _ _ _ **0**

Lubricated polyester elastomer
Last digit of part no. _ _ _ _ _ _ **2**

Hydrolysis stabilised
polyester elastomer (Red 72D)
Last digit of part no. _ _ _ _ _ _ **3**

Hythane 181 - *A limited number of sizes are available in this material option*
Last digit of part no. _ _ _ _ _ _ **4**

For full details and availability please contact your local Hallite sales office. Technical details shown are for standard Red 55D polyester elastomer.

FEATURES

- LOW BREAK-OUT AND OPERATING FRICTION LEVELS.
- RAPID RECOVERY OF FACE AFTER ASSEMBLY. UNLIKE COMMON PTFE FACES, NO RE-SIZING IS REQUIRED.
- MORE TOLERANT TO CONTAMINATION THAN COMMON PTFE EQUIVALENTS.
- EXCELLENT POSITION HOLDING CHARACTERISTICS UNDER LOAD
- COMPATIBLE WITH MOST HYDRAULIC FLUIDS.
- EXCELLENT WEAR RESISTANCE.
- OPERATES ON A WIDE RANGE OF SURFACE FINISHES.
- IDEAL FOR USE WITH HALLITE 506 OR 87 BEARING STRIP.
- ISO 7425 HOUSINGS.

Piston seals

Hallite

754

metric

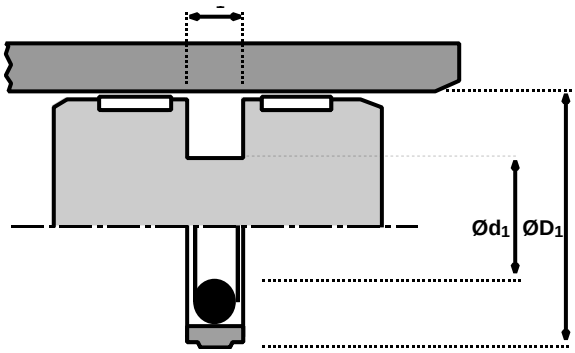

ØD1	TOL H9	Ød1	TOL f8	L1 + 0.2 - 0	PART No.
15	+0.04 +0.00	7.5	-0.01 -0.04	3.20	444641_
16	+0.04 +0.00	8.5	-0.01 -0.04	3.20	440061_‡
20	+0.05 +0.00	12.5	-0.02 -0.04	3.20	436231_‡
25	+0.05 +0.00	17.5	-0.02 -0.04	3.20	433961_‡
30	+0.05 +0.00	22.5	-0.02 -0.05	3.20	433971_
32	+0.06 +0.00	24.5	-0.02 -0.05	3.20	433981_‡
35	+0.06 +0.00	27.5	-0.02 -0.05	3.20	435241_
38.1	+0.06 +0.00	27.1	-0.02 -0.05	4.20	443231_
38.1	+0.06 +0.00	30.6	-0.03 -0.06	3.20	442871_
40	+0.06 +0.00	29.0	-0.02 -0.05	4.20	433921_‡
45	+0.06 +0.00	34.0	-0.03 -0.06	4.20	434231_
50	+0.06 +0.00	34.5	-0.03 -0.06	6.30	442741_‡
50	+0.06 +0.00	39.0	-0.03 -0.06	4.20	432711_‡
50.8	+0.06 +0.00	39.8	-0.03 -0.06	4.20	432711_
55	+0.07 +0.00	39.5	-0.03 -0.06	6.30	435561_
55	+0.07 +0.00	44.0	-0.03 -0.06	4.20	446551_
60	+0.07 +0.00	44.5	-0.03 -0.06	6.3	439071_
60	+0.07 +0.00	49.0	-0.03 -0.06	4.20	432701_
63	+0.07 +0.00	47.5	-0.03 -0.08	6.30	443111_‡
63	+0.07 +0.00	50.0	-0.03 -0.08	6.30	447231_
63	+0.07 +0.00	52.0	-0.03 -0.08	4.20	432691_‡
63.5	+0.07 +0.00	52.5	-0.03 -0.08	4.20	432691_
65	+0.07 +0.00	49.5	-0.03 -0.06	6.30	436201_

ØD1	TOL H9	Ød1	TOL f8	L1 + 0.2 - 0	PART No.
65	+0.07 +0.00	52.0	-0.03 -0.08	6.30	438491_
65	+0.07 +0.00	54.0	-0.03 -0.08	4.20	435301_
70	+0.07 +0.00	57.0	-0.03 -0.08	6.30	439081_
70	+0.07 +0.00	59.0	-0.03 -0.08	4.20	432681_
75	+0.07 +0.00	59.5	-0.03 -0.08	6.30	470491_
75	+0.07 +0.00	59.5	-0.03 -0.08	6.30	4621300
75	+0.07 +0.00	59.5	-0.03 -0.08	6.30	4631600
75	+0.07 +0.00	64.0	-0.03 -0.08	4.20	433991_
75	+0.07 +0.00	68.0	-0.03 -0.08	6.30	4631700
80	+0.07 +0.00	64.5	-0.03 -0.08	6.30	427091_‡
82.5	+0.09 +0.00	67.0	-0.03 -0.08	6.30	442881_
85	+0.09 +0.00	69.5	-0.03 -0.08	6.30	456401_
90	+0.09 +0.00	74.5	-0.03 -0.08	6.30	437271_
95	+0.09 +0.00	79.5	-0.03 -0.08	6.30	456951_
100	+0.09 +0.00	84.5	-0.04 -0.09	6.30	433931_‡
101.6	+0.09 +0.00	86.1	-0.04 -0.09	6.30	442891_
105	+0.09 +0.00	89.5	-0.04 -0.09	6.30	437251_
110	+0.09 +0.00	94.5	-0.04 -0.09	6.30	441931_
115	+0.09 +0.00	99.5	-0.04 -0.09	6.30	435581_
120	+0.10 +0.00	99.0	-0.04 -0.09	8.10	453501_
120	+0.10 +0.00	104.5	-0.04 -0.09	6.30	446541_
125	+0.10 +0.00	104.0	-0.04 -0.09	8.10	437651_‡
125	+0.10 +0.00	109.5	-0.04 -0.09	6.30	434001_‡

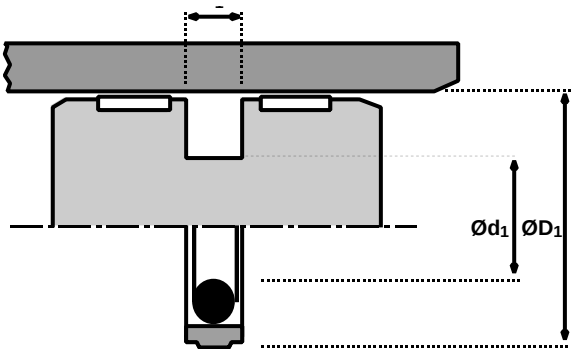

Piston seals

Hallite 754

metric

ØD1	TOL H9	Ød1	TOL f8	L1 + 0.2 - 0	PART No.
127	+0.10 +0.00	111.5	-0.04 -0.09	6.30	442901_
130	+0.10 +0.00	109.0	-0.04 -0.09	8.10	440241_
130	+0.10 +0.00	114.5	-0.04 -0.09	6.30	434221_
135	+0.10 +0.00	114.0	-0.04 -0.09	8.10	453511_
140	+0.10 +0.00	119.0	-0.04 -0.09	8.10	434011_
140	+0.10 +0.00	124.5	-0.04 -0.11	6.30	449941_
150	+0.10 +0.00	129.0	-0.04 -0.11	8.10	439691_
160	+0.10 +0.00	139.0	-0.04 -0.11	8.10	434021_‡
165	+0.10 +0.00	144.0	-0.04 -0.11	8.10	445221_
170	+0.10 +0.00	149.0	-0.04 -0.11	8.10	434031_

ØD1	TOL H9	Ød1	TOL f8	L1 + 0.2 - 0	PART No.
180	+0.10 +0.00	159.0	-0.04 -0.11	8.10	434041_
190	+0.12 +0.00	169.0	-0.04 -0.11	8.10	434241_
200	+0.12 +0.00	179.0	-0.04 -0.11	8.10	434051_‡
210	+0.12 +0.00	189.0	-0.05 -0.12	8.10	435151_
225	+0.12 +0.00	204.0	-0.05 -0.12	8.10	451281_
240	+0.12 +0.00	219.0	-0.05 -0.12	8.10	455361_
250	+0.12 +0.00	229.0	-0.05 -0.12	8.10	439371_‡
300	+0.13 +0.00	279.0	-0.06 -0.14	8.10	457281_

Notes

Hallite

755

TECHNICAL DETAILS

METRIC ○ — INCH ●

OPERATING CONDITIONS

	METRIC	INCH
MAXIMUM SPEED	1.0 m/sec	3.0 ft/sec
TEMPERATURE RANGE	-40°C + 110°C	-40°F + 230°F
MAXIMUM PRESSURE	350 bar	5000 p.s.i.

MAXIMUM EXTRUSION GAP

Figures show the maximum permissible gap all on one side using the minimum clearance Ø and maximum bore Ø

PRESSURE bar	100	160	250	350
PRESSURE p.s.i.	1500	2400	3750	5000
MAXIMUM GAP (S>0.280) in	0.030	0.025	0.020	0.010
MAXIMUM GAP (S<0.280) in	0.025	0.020	0.015	0.005

SURFACE ROUGHNESS

	µmRa	µmRt	µinCLA	µinRMS
DYNAMIC SEALING FACE $ØD_1$	0.1 ↔ 0.4	4 max	4 ↔ 16	5 ↔ 18
STATIC SEALING FACE $Ød_1$	1.6 max	10 max	63 max	70 max
STATIC HOUSING FACES L_1	3.2 max	16 max	125 max	140 max

CHAMFERS & RADII

GROOVE SECTION ≤ S in	0.154	0.269	0.373	0.431
MIN CHAMFER C in	0.100	0.150	0.200	0.200
MAX FILLET RAD r_1 in	0.016	0.016	0.016	0.016

TOLERANCES

	$ØD_1$	$Ød_1$	
in	H9	js10	
L_1 in	= 0.129	= 0.283	>0.283
L_1	± 0.002	±0.003	±0.004

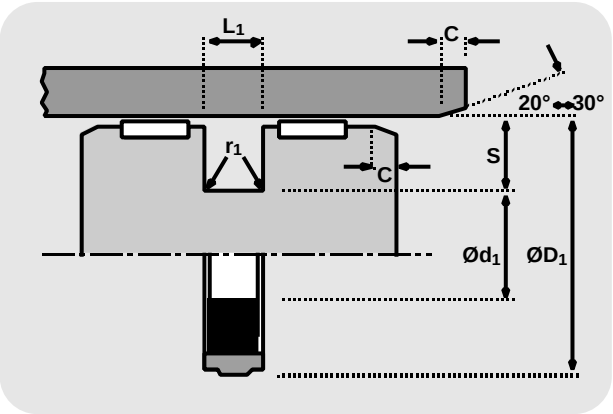

DESIGN

The Hallite 755 seal is a compact, low friction seal for light to medium duty hydraulic cylinders. Designed originally to the North American housing standards, the 755 is an inch version of Hallite„s 754. It comprises of a very tough elastomeric face (see material options) which is pre-loaded by a square section ring (as North American convention). Please note part numbers marked * are supplied with an O ring energiser.

It is recommended that an adequate bearing is mounted on both sides of the seal. See Hallite 506 bearing strip.

For full details and availability please contact your local Hallite sales office.

MATERIALS

Standard face material:
Polyester elastomer - (red 55D)
Last digit of part no. _ _ _ _ _ _ **0**

Face material options:
Hydrolysis stabilised
polyester elastomer (Grey 55D)
Last digit of part no. _ _ _ _ _ _ **1**

Lubricated polyester elastomer
Last digit of part no. _ _ _ _ _ _ **2**

Hydrolysis stabilised
polyester elastomer (Red 72D)
Last digit of part no. _ _ _ _ _ _ **3**

Hythane 181 - *A limited number of sizes are available in this material option*
Last digit of part no. _ _ _ _ _ _ **4**

Technical details shown are for standard Red 55D polyester elastomer.

FEATURES

- LOW BREAK-OUT AND OPERATING FRICTION LEVELS.
- RAPID RECOVERY OF FACE AFTER ASSEMBLY. UNLIKE COMMON PTFE FACES, NO RE-SIZING IS REQUIRED.
- MORE TOLERANT TO DIRT AND CONTAMINATION THAN COMMON PTFE EQUIVALENTS.
- EXCELLENT POSITION HOLDING CHARACTERISTICS UNDER LOAD
- COMPATIBLE WITH MOST HYDRAULIC FLUIDS.
- EXCELLENT WEAR RESISTANCE.
- OPERATES ON A WIDE RANGE OF SURFACE FINISHES.
- IDEAL FOR USE WITH HALLITE„S 506 BEARING STRIP

Piston seals

Hallite

755

inch

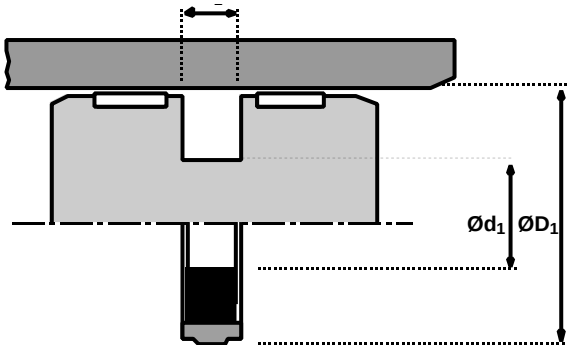

ØD1	TOL H9	Ød1	TOL js10	L1	TOL	PART No.
1.000	+0.002 +0.000	0.691	+0.001 -0.001	0.129	+0.002 -0.002	891000_
1.250	+0.002 +0.000	0.941	+0.002 -0.002	0.129	+0.002 -0.002	891010_
1.500	+0.002 +0.000	1.191	+0.002 -0.002	0.129	+0.002 -0.002	891020_
1.750	+0.002 +0.000	1.441	+0.002 -0.002	0.129	+0.002 -0.002	891030_
2.000	+0.003 +0.000	1.462	+0.002 -0.002	0.283	+0.003 -0.003	455352_
2.000	+0.003 +0.000	1.606	+0.002 -0.002	0.129	+0.002 -0.002	891310_*
2.000	+0.003 +0.000	1.691	+0.002 -0.002	0.129	+0.002 -0.002	891040_
2.250	+0.003 +0.000	1.941	+0.002 -0.002	0.129	+0.002 -0.002	891050_
2.500	+0.003 +0.000	1.962	+0.002 -0.002	0.283	+0.003 -0.003	449002_
2.500	+0.003 +0.000	2.106	+0.002 -0.002	0.129	+0.002 -0.002	443931_*
2.500	+0.003 +0.000	2.191	+0.002 -0.002	0.129	+0.002 -0.002	891060_
2.750	+0.003 +0.000	2.441	+0.002 -0.002	0.129	+0.002 -0.002	891070_
3.000	+0.003 +0.000	2.462	+0.002 -0.002	0.283	+0.003 -0.003	891080_
3.250	+0.003 +0.000	2.712	+0.002 -0.002	0.283	+0.003 -0.003	891090_
3.500	+0.003 +0.000	2.962	+0.002 -0.002	0.283	+0.003 -0.003	891100_
3.750	+0.003 +0.000	3.212	+0.002 -0.002	0.283	+0.003 -0.003	891110_
4.000	+0.003 +0.000	3.462	+0.002 -0.002	0.283	+0.003 -0.003	891120_
4.250	+0.003 +0.000	3.712	+0.002 -0.002	0.283	+0.003 -0.003	891130_
4.500	+0.003 +0.000	3.962	+0.002 -0.002	0.283	+0.003 -0.003	891140_

ØD1	TOL H9	Ød1	TOL js10	L1	TOL	PART No.
4.750	+0.004 +0.000	4.212	+0.002 -0.002	0.283	+0.003 -0.003	891150_
5.000	+0.004 +0.000	4.462	+0.002 -0.002	0.283	+0.003 -0.003	891160_
5.250	+0.004 +0.000	4.504	+0.002 -0.002	0.378	+0.004 -0.004	891170_
5.500	+0.004 +0.000	4.754	+0.003 -0.003	0.378	+0.004 -0.004	891180_
5.750	+0.004 +0.000	5.004	+0.003 -0.003	0.378	+0.004 -0.004	891320_
6.000	+0.004 +0.000	5.254	+0.003 -0.003	0.378	+0.004 -0.004	891190_
6.250	+0.004 +0.000	5.504	+0.003 -0.003	0.378	+0.004 -0.004	891200_
6.500	+0.004 +0.000	5.754	+0.003 -0.003	0.378	+0.004 -0.004	891210_
7.000	+0.004 +0.000	6.250	+0.003 -0.003	0.312	+0.004 -0.004	439481_*
7.000	+0.004 +0.000	6.254	+0.003 -0.003	0.378	+0.004 -0.004	891220_
7.250	+0.005 +0.000	6.504	+0.003 -0.003	0.378	+0.004 -0.004	891230_
7.500	+0.005 +0.000	6.754	+0.003 -0.003	0.378	+0.004 -0.004	891240_
8.000	+0.005 +0.000	7.254	+0.003 -0.003	0.378	+0.004 -0.004	891250_
8.437	+0.005 +0.000	7.691	+0.003 -0.003	0.378	+0.004 -0.004	891300_
8.500	+0.005 +0.000	7.754	+0.003 -0.003	0.378	+0.004 -0.004	891260_
9.000	+0.005 +0.000	8.137	+0.003 -0.003	0.378	+0.004 -0.004	891270_
9.500	+0.005 +0.000	8.637	+0.003 -0.003	0.378	+0.004 -0.004	891280_
10.000	+0.005 +0.000	9.137	+0.003 -0.003	0.378	+0.004 -0.004	891290_

* Supplied with an O ring energiser.

Piston Seals

Hallite

770

TECHNICAL DETAILS

METRIC ○ — INCH ●

OPERATING CONDITIONS

	METRIC	INCH
MAXIMUM SPEED	1.0 m/sec	3.0 ft/sec
TEMPERATURE RANGE	-40°C + 110°C	-40°F + 230°F
MAXIMUM PRESSURE	350 bar	5000 p.s.i.

MAXIMUM EXTRUSION GAP

Figures show the maximum permissible gap all on one side using the minimum clearance Ø and maximum bore Ø

PRESSURE bar	100	160	250	350
PRESSURE p.s.i.	1500	2400	3750	5000
MAXIMUM GAP in	0.030	0.025	0.020	0.010

SURFACE ROUGHNESS

	µmRa	µmRt	µinCLA	µinRMS
DYNAMIC SEALING FACE $ØD_1$	0.1 ↔ 0.4	4 max	4 ↔ 16	5 ↔ 18
STATIC SEALING FACE $Ød_1$	1.6 max	10 max	63 max	70 max
STATIC HOUSING FACES L_1	3.2 max	16 max	125 max	140 max

CHAMFERS & RADII

GROOVE SECTION ≤ S in	0.125	0.187	0.250
MIN CHAMFER C in	0.100	0.150	0.200
MAX FILLET RAD r_1 in	0.016	0.016	0.016

TOLERANCE

in	$ØD_1$	$Ød_1$	$Ød_2$	L_1
	+0.002 -0	+0 -0.002	+0 -0.001	+0.005 -0

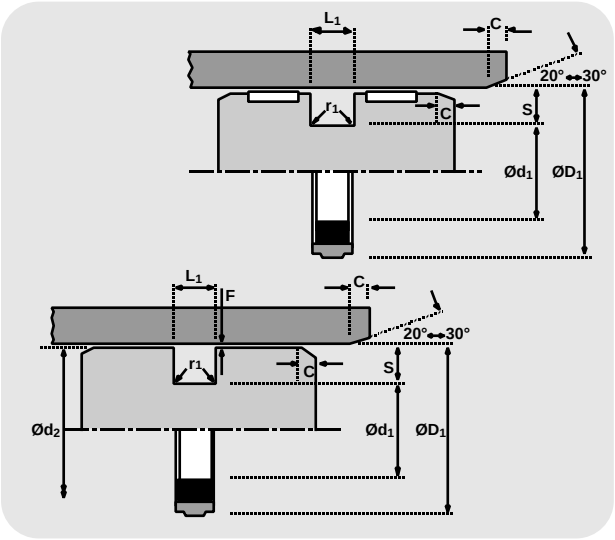

DESIGN

The Hallite 770 seal is a double acting compact, low friction seal for light to medium duty hydraulic cylinders. It has been designed to fit standard inch O ring housings. It comprises a tough self lubricated elastomeric face which is pre-loaded by a rectangular cross-section expander. It can be used on SG iron pistons or on a piston where there is an adequate remote bearing (see Hallite 506 and 533 bearings).

The standard material is only suitable for hydraulic mineral oil applications. Other material options are available for water based (HFA and HFB) fluids and synthetic esters (HEES). In certain sizes a Hythane face material option is available, particularly for intermittent single acting applications.

For full details and availability please contact your local Hallite Sales office.

MATERIAL OPTIONS

Standard face material: (Brown 55D)
Lubricated polyester elastomer
Last digit of part no. _ _ _ _ _ _ **2**

Face material options:
Polyester elastomer (Red 55D)
Last digit of part no. _ _ _ _ _ _ **0**

Hydrolysis stabilised
polyester elastomer (Grey 55D)
Last digit of part no. _ _ _ _ _ _ **1**

Hydrolysis stabilised
polyester elastomer (Red 72D)
Last digit of part no. _ _ _ _ _ _ **3**

Hythane 181 - *A limited number of sizes are available in this material option*
Last digit of part no. _ _ _ _ _ _ **4**

Technical details shown are for standard Brown 55D lubricated polyester elastomer.

FEATURES

- LOW BREAK-OUT AND OPERATING FRICTION LEVELS.
- RAPID RECOVERY OF FACE AFTER ASSEMBLY. UNLIKE COMMON PTFE FACES, NO RE-SIZING IS REQUIRED.
- MORE TOLERANT TO DIRT AND CONTAMINATION THAN COMMON PTFE EQUIVALENTS.
- EXCELLENT WEAR RESISTANCE.
- OPERATES ON A WIDE RANGE OF SURFACE FINISHES.
- IDEAL FOR USE WITH HALLITE HALLITE 506 OR 533 GFN WEAR RINGS

Piston seals

Hallite 770

inch

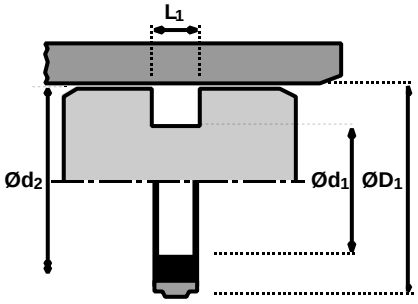

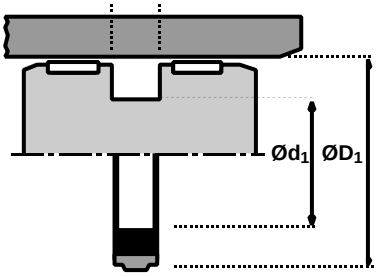

ØD1	TOL	Ød1	TOL	Ød2	TOL	L1	TOL	PART No.
1.250	+0.002 -0.000	1.008	+0.000 -0.002	1.247	+0.000 -0.001	0.187	+0.005 -0.000	455441_
2.000	+0.002 -0.000	1.630	+0.000 -0.002	1.997	+0.000 -0.001	0.281	+0.005 -0.000	455351_
2.500	+0.002 -0.000	2.130	+0.000 -0.002	2.497	+0.000 -0.001	0.281	+0.005 -0.000	449001_
3.000	+0.002 -0.000	2.630	+0.000 -0.002	2.997	+0.000 -0.001	0.281	+0.005 -0.000	434941_
3.250	+0.002 -0.000	2.880	+0.000 -0.002	3.247	+0.000 -0.001	0.281	+0.005 -0.000	434951_
3.500	+0.002 -0.000	3.130	+0.000 -0.002	3.497	+0.000 -0.001	0.281	+0.005 -0.000	434961_
3.750	+0.002 -0.000	3.380	+0.000 -0.002	3.747	+0.000 -0.001	0.281	+0.005 -0.000	434971_
4.000	+0.002 -0.000	3.630	+0.000 -0.002	3.997	+0.000 -0.001	0.281	+0.005 -0.000	434981_
4.250	+0.002 -0.000	3.880	+0.000 -0.002	4.247	+0.000 -0.001	0.281	+0.005 -0.000	434991_
4.500	+0.002 -0.000	4.130	+0.000 -0.002	4.497	+0.000 -0.001	0.281	+0.005 -0.000	435001_
4.750	+0.002 -0.000	4.380	+0.000 -0.002	4.747	+0.000 -0.001	0.281	+0.005 -0.000	435011_
5.000	+0.002 -0.000	4.630	+0.000 -0.002	4.997	+0.000 -0.001	0.281	+0.005 -0.000	435021_

Rotary pressure seal

Hallite

RO 800

TECHNICAL DETAILS

METRIC

OPERATING CONDITIONS

MAXIMUM SPEED	0.2 m/s
TEMPERATURE RANGE	-30°C + 80°C
MAXIMUM PRESSURE	350 bar
LIMITING PV VALUES LUBRICATED	25 bar m/s

MAXIMUM EXTRUSION GAP

PRESSUE bar	100	200	350
MAXIMUM GAP L_1 4.2 mm	0.20	0.10	H7/f7 Tolerance
MAXIMUM GAP L_1 6.3 mm	0.30	0.25	H7/f7 Tolerance

SURFACE ROUGHNESS

	µmRa	µmRt
DYNAMIC SEALING FACE- ROD $Ød_1$	0.1 Ö 0.3	2.5 max
STATIC SEALING FACE - ROD $ØD_1$	1.6 max	10 max
STATIC HOUSING FACES L_1	2.5 max	16 max

CHAMFERS & RADII

GROOVE SECTION ≤ S mm	5.5	7.75
MIN. CHAMFER C mm	3.0	5.0
MAX. FILLET RAD r_1 mm	0.8	1.2

TOLERANCES

	$Ød_1$	$ØD_1$	L_1
mm	f9	H11	+0.2 -0

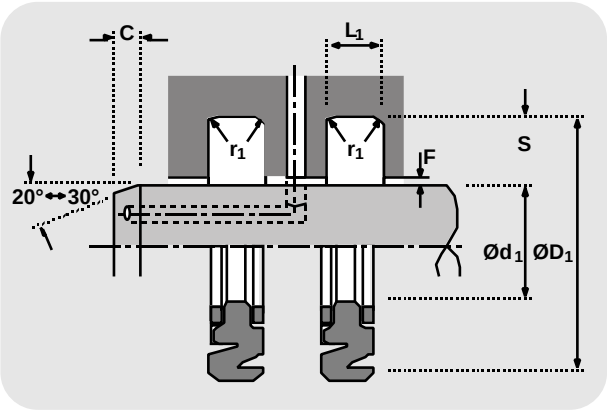

DESIGN

Apatented seal designed specifically for hydraulic swivels.
Manufactured in the high grade Hythane ®181, Hallite„s Ro800 is engineered as a one piece seal. No relative motion between the seal and the energiser can effect the lifetime of this seal, which is often mainly the problem of two piece swivel seals. The special design of the Ro800 is minimizing the friction.
Optional anti-extrusions rings made from acetal are allowing larger extrusion gaps. The seal without anti-extrusion rings are made for applications with a very good guidance or low working pressure. Therefor please contact our technical service. Ro800 is designed for double acting conditions. Designs are available for piston or rod applications.
The seal is easy to install in one piece housings.

FEATURES

- ONE PIECE SEAL
- NO ROTATTION WITHIN THE GROOVE
- AVAILABLE FOR ROD AND PISTON
- VERY LOW FRICTION
- EASY TO INSTALL
- LOW ABRASION AND GOOD WEAR RESISTANCE
- SIMPLE AND SMALL SEAL GROOVES

Rotary pressure seal

RO800

metric

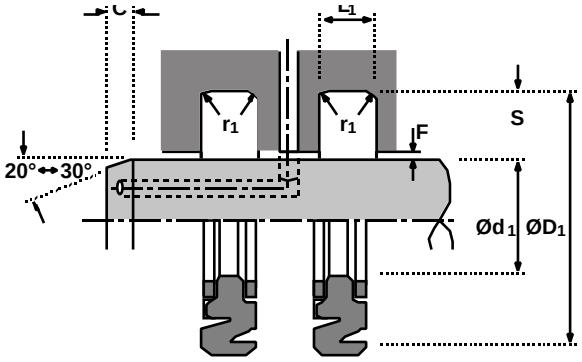

Rod sealing

Ød1	ØD1	L1	PART No.
45.0	56.0	4.2	4743400*
56.0	67.0	4.2	4748000*
70.0	80.0	5.0	4727800*
130.0	145.5	6.3	4720610

Bore sealing

ØD1	Ød1	L1	PART No.
80.0	69.3	4.2	4748100*
145.0	129.5	6.3	4712710
160.0	144.5	6.3	4712810
180.0	164.5	6.3	4720710

* Without back-Ring

Hallite

831

TECHNICAL DETAILS

METRIC ○ — INCH ●

OPERATING CONDITIONS

	METRIC	INCH
MAXIMUM SPEED	4.0 m/sec	12.0 ft/sec
TEMPERATURE RANGE	-30°C + 100°C	-22°F + 212°F

SURFACE ROUGHNESS

	µmRa	µmRt	µinCLA	µinRMS
DYNAMIC SEALING FACE $Ød_1$	0.1 ↔ 0.4	4 max	4 ↔ 16	5 ↔ 18
STATIC SEALING FACE $ØD_1$ $ØD_2$	1.6 max	10 max	63 max	70 max
STATIC HOUSING FACES L_1	3.2 max	16 max	125 max	140 max

RADII

ROD DIAMETER $Ød_1$ mm	≤ 90	> 90
MAX FILLET RAD r_1 mm	0.2	0.4
MAX FILLET RAD r_2 mm	0.4	0.4

TOLERANCES

	$Ød_1$	$ØD_1$	$ØD_2$	L_1
mm	f9	H11	H11	+0.2 -0

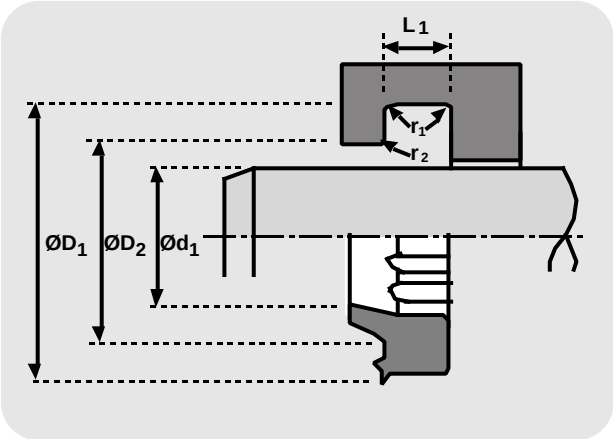

DESIGN

The Hallite 831 wiper is designed to snap into a standard housing and provide reliable medium duty dirt exclusion.
The proportions of the precision trimmed wiping lip ensure that it remains in contact with the rod surface to remove all deposits of mud and other forms of contamination except for those found in heavy duty industrial applications.

The outside diameter of the seal incorporates a 'crush lip„ to provide interference fit with the housing and a ‚face bead„ to ensure that the crush lip is not trapped in the corner of the housing. The inside diameter of the seal is provided with ribs to prevent the possibility of blow-out due to pressure trapping of the main rod seal.

The Hallite 831 is precision moulded in polyurethane for maximum wear resistance and is interchangeable with many common European wiper styles.

FEATURES

- PRECISION TRIMMED SEALING LIP
- ‚CRUSH LIP„ AND ‚FACE BEAD„ PROVIDE EFFECTIVE SEAL ON HOUSING
- LOW WEAR LONG LIFE
- COST EFFECTIVE
- PRESSURE RELIEF RIBS

Wipers

Hallite 831

metric

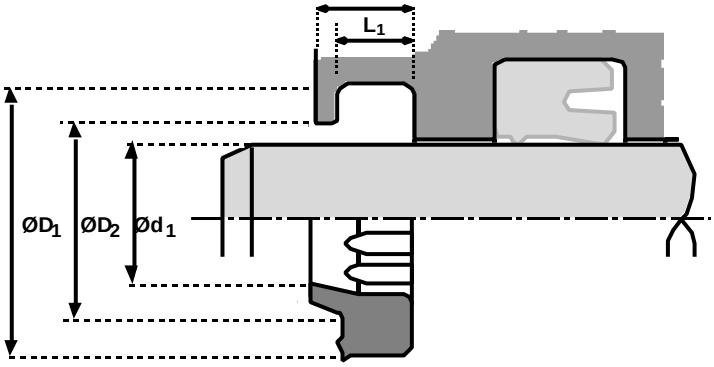

Ød1	TOL f9	ØD1	TOL H11	ØD2	TOL H11	L1 +0.2 - 0	L2	PART No.
12	-0.016 -0.059	18.6	+0.13 +0.00	15.0	+0.11 +0.00	3.8	5.3	4565800
14	-0.016 -0.059	20.6	+0.13 +0.00	17.0	+0.11 +0.00	3.8	5.3	4580000
16	-0.016 -0.059	24.6	+0.13 +0.00	19.0	+0.13 +0.00	5.3	7.0	4703800
18	-0.016 -0.059	24.6	+0.13 +0.00	21.0	+0.13 +0.00	3.8	5.3	4580100
18	-0.016 -0.059	26.6	+0.13 +0.00	21.0	+0.13 +0.00	5.3	7.0	4703900
20	-0.020 -0.072	28.6	+0.13 +0.00	23.0	+0.13 +0.00	5.3	7.0	4530600
22	-0.020 -0.072	30.6	+0.16 +0.00	25.0	+0.13 +0.00	5.3	7.0	4530700
25	-0.020 -0.072	33.6	+0.16 +0.00	28.0	+0.13 +0.00	5.3	7.0	4530800
28	-0.020 -0.072	36.6	+0.16 +0.00	31.0	+0.16 +0.00	5.3	7.0	4565900
30	-0.020 -0.072	38.6	+0.16 +0.00	33.0	+0.16 +0.00	5.3	7.0	4530900
32	-0.025 -0.087	40.6	+0.16 +0.00	35.0	+0.16 +0.00	5.3	7.0	4534500
35	-0.025 -0.087	43.6	+0.16 +0.00	38.0	+0.16 +0.00	5.3	7.0	4531000
36	-0.025 -0.087	44.6	+0.16 +0.00	39.0	+0.16 +0.00	5.3	7.0	4580200
40	-0.025 -0.087	48.6	+0.16 +0.00	43.0	+0.16 +0.00	5.3	7.0	4531100
45	-0.025 -0.087	53.6	+0.19 +0.00	48.0	+0.16 +0.00	5.3	7.0	4533800
45	-0.025 -0.087	55.6	+0.19 +0.00	48.0	+0.16 +0.00	5.3	7.0	4531200
50	-0.025 -0.087	58.6	+0.19 +0.00	53.0	+0.19 +0.00	5.3	7.0	4533900
50	-0.025 -0.087	60.6	+0.19 +0.00	53.0	+0.19 +0.00	5.3	7.0	4531300
55	-0.030 -0.104	63.6	+0.19 +0.00	58.0	+0.19 +0.00	5.3	7.0	4534000
55	-0.030 -0.104	65.6	+0.19 +0.00	58.0	+0.19 +0.00	5.3	7.0	4531400
56	-0.030 -0.104	64.6	+0.19 +0.00	59.0	+0.19 +0.00	5.3	7.0	4566000
56	-0.030 -0.104	66.6	+0.19 +0.00	59.0	+0.19 +0.00	5.3	7.0	4704000
60	-0.030 -0.104	68.6	+0.19 +0.00	63.0	+0.19 +0.00	5.3	7.0	4534100

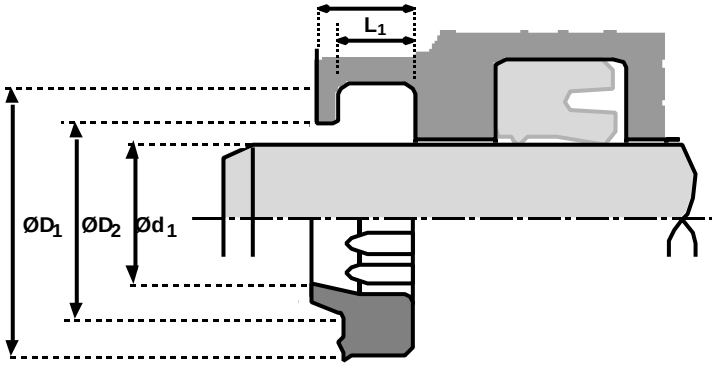

Wipers

Hallite 831

metric

Ød1	TOL f9	ØD1	TOL H11	ØD2	TOL H11	L1 +0.2 - 0	L2	PART No.
60	-0.030 -0.104	70.6	+0.19 +0.00	63.0	+0.19 +0.00	5.3	7.0	4531500
70	-0.030 -0.104	78.6	+0.19 +0.00	73.0	+0.19 +0.00	5.3	7.0	4534200
70	-0.030 -0.104	80.6	+0.22 +0.00	73.0	+0.19 +0.00	5.3	7.0	4531600
80	-0.030 -0.104	88.6	+0.22 +0.00	83.0	+0.22 +0.00	5.3	7.0	4534300
80	-0.030 -0.104	92.2	+0.22 +0.00	86.0	+0.22 +0.00	7.1	12.0	4531700
85	-0.036 -0.123	93.6	+0.22 +0.00	88.0	+0.22 +0.00	5.3	7.0	4534400
85	-0.036 -0.123	97.2	+0.22 +0.00	91.0	+0.22 +0.00	7.1	12.0	4531800
90	-0.036 -0.123	102.2	+0.22 +0.00	96.0	+0.22 +0.00	7.1	12.0	4531900
100	-0.036 -0.123	112.2	+0.22 +0.00	106.0	+0.22 +0.00	7.1	12.0	4532000
110	-0.036 -0.123	122.2	+0.25 +0.00	116.0	+0.22 +0.00	7.1	12.0	4538200
135	-0.043 -0.143	147.2	+0.25 +0.00	141.0	+0.25 +0.00	7.1	12.0	4538100

Notes

Hallite

834

TECHNICAL DETAILS

METRIC ○ — INCH ●

	METRIC		INCH	
OPERATING CONDITIONS				
MAXIMUM SPEED	4.0 m/sec		12.0 ft/sec	
TEMPERATURE RANGE	-45°C + 110°C		-50°F + 230°F	
SURFACE ROUGHNESS	µmRa	µmRt	µinCLA	µinRMS
DYNAMIC SEALING FACE $Ød_1$	0.1 ↔ 0.4	4 max	4 ↔ 16	5 ↔ 18
STATIC SEALING FACE $ØD_1$ $ØD_2$	1.6 max	10 max	63 max	70 max
STATIC HOUSING FACES L_1	3.2 max	16 max	125 max	140 max
RADII				
MAX FILLET RAD r_1 mm	0.4			
MAX FILLET RAD r_2 mm	0.2			

TOLERANCES	$Ød_1$	$ØD_1$	$ØD_2$	L_1
mm	f9	H11	H11	+0.2 -0

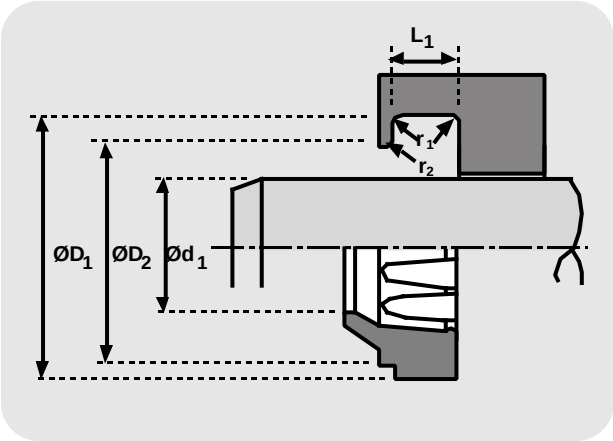

DESIGN

The Hallite 834 wiper is designed to snap into a standard housing and provide reliable medium duty dirt exclusion. The proportions of the wiping lip ensure that it remains in contact with the rod surface to remove all deposits of mud and other forms of contamination except for those found in the heavy duty environment such as steel works and cement factories.

The inside diameter of the seal is provided with ribs to prevent the possibility of blow out due to pressure trapping of the main rod seal.

The Hallite 834 is precision moulded in Hythane 181 for maximum wear resistance.

FEATURES

- SNUG FIT PROVIDES EFFECTIVE SEALING
- LOW WEAR - LONG LIFE
- EASY INSTALLATION
- PRESSURE RELIEF RIBS
- PRECISION TRIMMED WIPING LIP

Wiper

Hallite

834

metric

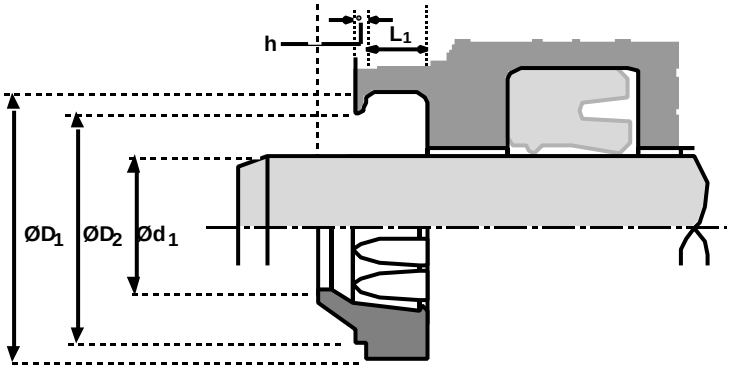

Ød1	TOL f9	ØD1	TOL H11	ØD2	TOL H11	L1 +0.2 - 0	L2	h	PART No.
18	-0.016 -0.059	26.0	+0.13 +0.00	24.0	+0.13 +0.00	4.0	7.0	1.0	4367200
20	-0.020 -0.072	28.0	+0.13 +0.00	26.0	+0.13 +0.00	4.0	7.0	1.0	4391300
22	-0.020 -0.072	30.0	+0.13 +0.00	28.0	+0.13 +0.00	4.0	7.0	1.0	4370600
25	-0.020 -0.072	33.0	+0.16 +0.00	31.0	+0.16 +0.00	4.0	7.0	1.0	4343900
26	-0.020 -0.072	34.0	+0.16 +0.00	32.0	+0.16 +0.00	4.0	7.0	1.0	4514400
28	-0.020 -0.072	36.0	+0.16 +0.00	34.0	+0.16 +0.00	4.0	7.0	1.0	4373500
30	-0.020 -0.072	38.0	+0.16 +0.00	36.0	+0.16 +0.00	4.0	7.0	1.0	4378800
32	-0.025 -0.087	40.0	+0.16 +0.00	38.0	+0.16 +0.00	4.0	7.0	1.0	4373600
35	-0.025 -0.087	43.0	+0.16 +0.00	41.0	+0.16 +0.00	4.0	7.0	1.0	4398400
36	-0.025 -0.087	44.0	+0.16 +0.00	42.0	+0.16 +0.00	4.0	7.0	1.0	4370700
37	-0.025 -0.087	45.0	+0.16 +0.00	43.0	+0.16 +0.00	4.0	7.0	1.0	4514500
38	-0.025 -0.087	46.0	+0.16 +0.00	44.0	+0.16 +0.00	4.0	7.0	1.0	4515400
40	-0.025 -0.087	48.0	+0.16 +0.00	46.0	+0.16 +0.00	4.0	7.0	1.0	4378900
45	-0.025 -0.087	53.0	+0.19 +0.00	51.0	+0.19 +0.00	4.0	7.0	1.0	4370800
46	-0.025 -0.087	54.0	+0.19 +0.00	52.0	+0.19 +0.00	4.0	7.0	1.0	4515200
48	-0.025 -0.087	56.0	+0.19 +0.00	54.0	+0.19 +0.00	4.0	7.0	1.0	4432700
50	-0.025 -0.087	58.0	+0.19 +0.00	56.0	+0.19 +0.00	4.0	7.0	1.0	4379000
55	-0.030 -0.104	63.0	+0.19 +0.00	61.0	+0.19 +0.00	4.0	7.0	1.0	4515100
56	-0.030 -0.104	64.0	+0.19 +0.00	62.0	+0.19 +0.00	4.0	7.0	1.0	4385100
60	-0.030 -0.104	68.0	+0.19 +0.00	66.0	+0.19 +0.00	4.0	7.0	1.0	4385200
63	-0.030 -0.104	71.0	+0.19 +0.00	69.0	+0.19 +0.00	4.0	7.0	1.0	4385300
65	-0.030 -0.104	73.0	+0.19 +0.00	71.0	+0.19 +0.00	4.0	7.0	1.0	4394200
70	-0.030 -0.104	78.0	+0.19 +0.00	76.0	+0.19 +0.00	4.0	7.0	1.0	4373700

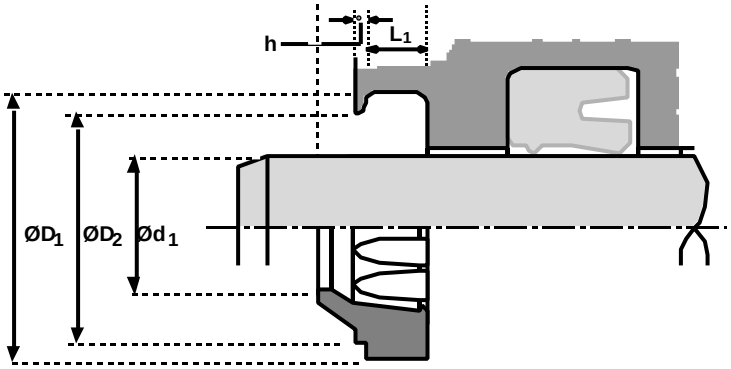

Wiper

Hallite 834

metric

Ød1	TOL f9	ØD1	TOL H11	ØD2	TOL H11	L1 +0.2 - 0	L2	h	PART No.
75	-0.030 -0.104	83.0	+0.22 +0.00	81.0	+0.22 +0.00	4.0	7.0	1.0	4711900
80	-0.030 -0.104	88.0	+0.22 +0.00	86.0	+0.22 +0.00	4.0	7.0	1.0	4398500
90	-0.036 -0.123	98.0	+0.22 +0.00	96.0	+0.22 +0.00	4.0	7.0	1.0	4398600
100	-0.036 -0.123	108.0	+0.22 +0.00	106.0	+0.22 +0.00	4.0	7.0	1.0	4394300
110	-0.036 -0.123	118.0	+0.22 +0.00	116.0	+0.22 +0.00	4.0	7.0	1.0	4448200
140	-0.043 -0.143	152.0	+0.25 +0.00	149.0	+0.25 +0.00	5.5	10.0	1.0	4456100

Notes

Wipers

Hallite

839

TECHNICAL DETAILS

METRIC ○ — INCH ●

OPERATING CONDITIONS

MAXIMUM SPEED	4.0 m/sec	12.0 ft/sec
MAXIMUM TEMPERATURE	-45°C + 110°C	-50°F + 230°F

SURFACE ROUGHNESS

	µmRa	µmRt	µinCLA	µinRMS
DYNAMIC SEALING FACE $Ød_1$	0.1 ÷ 0.4	4 max	4 ÷ 16	5 ÷ 18
STATIC SEALING FACE $ØD_1$ $ØD_2$	1.6 max	10 max	63 max	70 max
STATIC HOUSING FACES L_1	3.2 max	16 max	125 max	140 max

RADII

ROD DIAMETER $Ød_1$ mm	≤ 90	> 90
MAX FILLET RAD r_1 mm	0.2	0.4
MAX FILLET RAD r_2 mm	0.4	0.4

TOLERANCES

	$Ød_1$	$ØD_1$	$ØD_2$	L_1
839 mm	f9	H11	H11	+0.2 -0
839n mm	f9	+0-0.2	±0.1	+0.4 -0

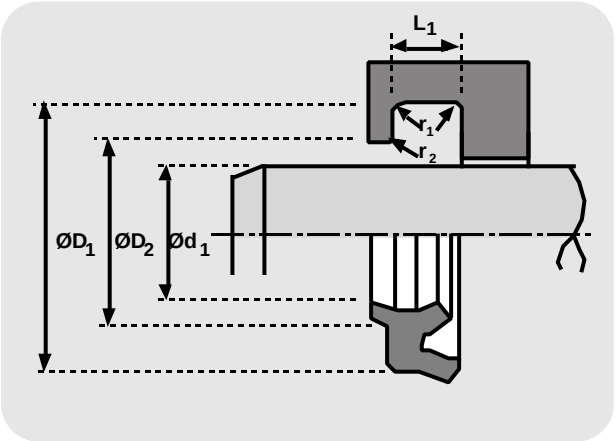

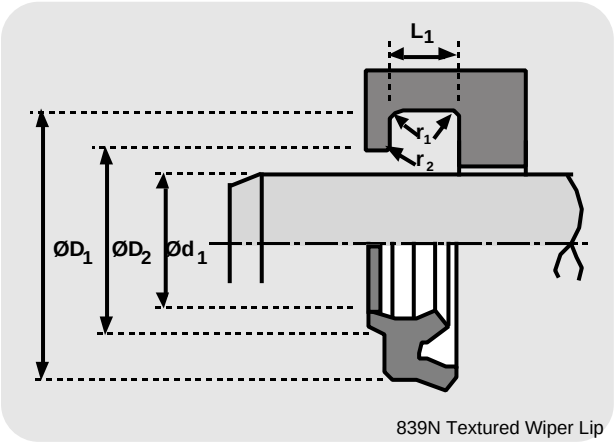

839N Textured Wiper Lip

DESIGN

The Hallite 839 wiper is precision moulded in Hallite's high performance polyurethane - Hythane 181 for maximum wear resistance, and is designed to exclude dirt and moisture from entering the cylinder and to collect traces of fluid passing the rod seal.

Opposite the wiper lip are two sealing lips accurately produced and proportioned to provide the secondary sealing function. To obtain stability and improve the seal the outside diameter is in interference with the housing.

The Hallite 839N wiper is designed to suit popular Asian housings and has a textured wiping lip for improved performance.

FEATURES

- TWIN LIP ENSURES DRIER SEALING SYSTEM.
- HARD WEARING MATERIAL FOR LONG LIFE

NB:
Part numbers suffixed by ‡‡" indicate housing sizes to meet ISO 6195C.

Wipers

Hallite 839

metric

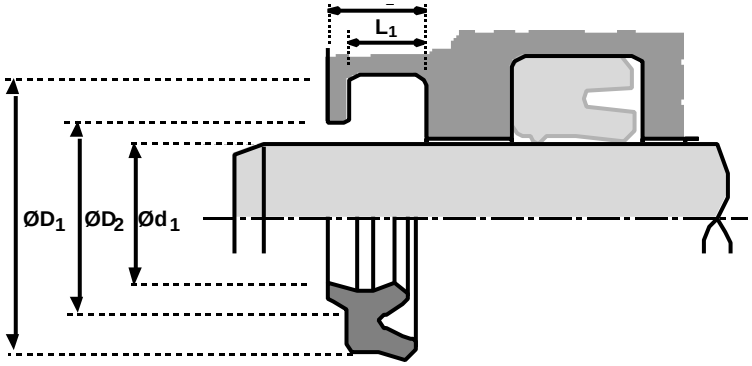

Ød1	TOL f9	ØD1	TOL H11	ØD2	TOL H11	L1 +0.2 - 0	L2	PART No.
12	-0.016 -0.059	18.0	+0.11 +0.00	14.5	+0.11 +0.00	4.0	7.0	4436800‡
14	-0.016 -0.059	20.0	+0.13 +0.00	16.5	+0.11 +0.00	4.0	7.0	4436900‡
18	-0.016 -0.059	24.0	+0.13 +0.00	20.5	+0.13 +0.00	4.0	7.0	4437000‡
20	-0.020 -0.072	26.0	+0.13 +0.00	22.5	+0.13 +0.00	4.0	6.0	4415000‡
22	-0.020 -0.072	28.0	+0.13 +0.00	24.5	+0.13 +0.00	4.0	7.0	4437100‡
28	-0.020 -0.072	36.0	+0.16 +0.00	31.0	+0.16 +0.00	5.0	8.0	4437200‡
30	-0.020 -0.072	38.0	+0.16 +0.00	33.0	+0.16 +0.00	5.0	8.0	4519200
32	-0.025 -0.087	40.0	+0.16 +0.00	35.0	+0.16 +0.00	5.0	8.0	4594000‡
36	-0.025 -0.087	44.0	+0.16 +0.00	39.0	+0.16 +0.00	5.0	8.0	4437300‡
40	-0.025 -0.087	48.0	+0.16 +0.00	43.0	+0.16 +0.00	5.0	8.0	4591600‡
45	-0.025 -0.087	53.0	+0.19 +0.00	48.0	+0.16 +0.00	5.0	8.0	4437400‡
50	-0.025 -0.087	58.0	+0.19 +0.00	53.0	+0.19 +0.00	5.0	8.0	4584400‡
55	-0.030 -0.104	65.0	+0.19 +0.00	58.0	+0.19 +0.00	6.0	9.7	4575200
56	-0.030 -0.104	66.0	+0.19 +0.00	59.0	+0.19 +0.00	6.0	9.7	4437500‡
65	-0.030 -0.104	75.0	+0.19 +0.00	68.0	+0.19 +0.00	6.0	9.7	4575300
70	-0.030 -0.104	80.0	+0.19 +0.00	73.0	+0.19 +0.00	6.0	9.7	4437600‡
90	-0.036 -0.123	100.0	+0.22 +0.00	93.0	+0.22 +0.00	6.0	9.7	4437700‡
110	-0.036 -0.123	125.0	+0.25 +0.00	114.0	+0.22 +0.00	8.5	13.0	4437800‡
140	-0.043 -0.143	155.0	+0.25 +0.00	144.0	+0.25 +0.00	8.5	13.0	4437900‡
180	-0.043 -0.143	196.0	+0.29 +0.00	184.0	+0.29 +0.00	9.5	14.0	4595600

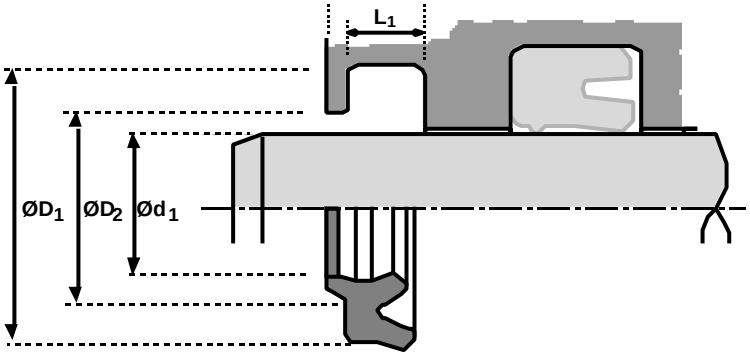

Wipers

Hallite 839N

metric

Ød1	TOL f9	ØD1 +0 - 0.2	ØD2 ±0.1	L1 +0.4 - 0	L2	PART No.
14	-0.016 -0.059	22.0	18.3	4.8	7.0	4632000
16	-0.016 -0.059	24.0	20.3	4.8	7.0	4632100
18	-0.016 -0.059	26.0	22.3	4.8	7.0	4630800
20	-0.020 -0.072	28.0	24.3	4.8	7.0	4630900
22.4	-0.020 -0.072	30.4	26.7	4.8	7.0	4630100
25	-0.020 -0.072	33.0	29.3	4.8	7.0	4631000
28	-0.020 -0.072	36.0	32.3	4.8	7.0	4631100
30	-0.020 -0.072	38.0	34.0	5.8	8.0	4630200
31.5	-0.025 -0.087	39.5	35.5	5.8	8.0	4632200
32	-0.025 -0.087	40.0	36.0	5.8	8.0	4632300
35	-0.025 -0.087	43.0	39.0	5.8	8.0	4630300
35.5	-0.025 -0.087	43.5	39.5	5.8	8.0	4630400
38	-0.025 -0.087	46.0	42.0	5.8	8.0	4632400
40	-0.025 -0.087	48.0	44.0	5.8	8.0	4630500
45	-0.025 -0.087	53.0	49.0	5.8	8.0	4630600
50	-0.025 -0.087	58.0	54.0	5.8	8.0	4630000
53	-0.030 -0.104	61.0	57.0	5.8	8.0	4632500
55	-0.030 -0.104	63.0	58.0	5.8	8.0	4630700
56	-0.030 -0.104	64.0	60.0	5.8	8.0	4632600
60	-0.030 -0.104	68.0	64.0	5.8	8.0	4631200
63	-0.030 -0.104	71.0	67.0	5.8	8.0	463700
65	-0.030 -0.104	73.0	69.0	5.8	8.0	4631300

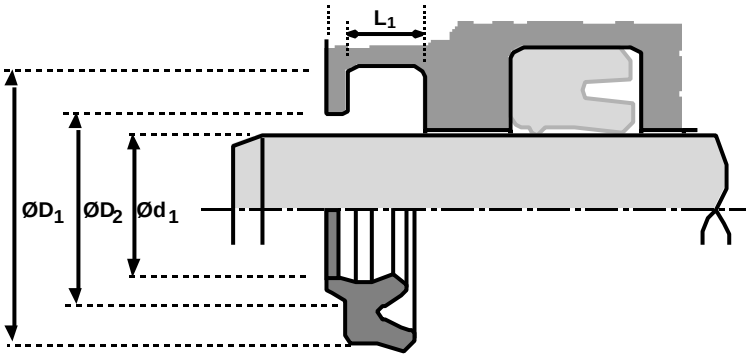

Wipers

Hallite 839N

metric

Ød1	TOL f9	ØD1 +0 - 0.2	ØD2 ±0.1	L1 +0.4 - 0	L2	PART No.
70	-0.030 -0.104	80.0	75.0	6.8	10.0	4631400
75	-0.030 -0.076	85.0	80.0	6.8	10.0	4631500
80	-0.030 -0.076	90.0	85.0	6.8	10.0	4631600
90	-0.036 -0.123	100.0	95.0	6.8	10.0	4631700
95	-0.036 -0.123	105.0	100.0	6.8	10.0	4631900
100	-0.036 -0.123	110.0	105.0	6.8	10.0	4631800
110	-0.036 -0.123	120.0	115.0	6.8	10.0	4633000
112	-0.036 -0.123	122.0	117.0	6.8	10.0	4633100
125	-0.043 -0.123	138.0	132.0	7.8	11.0	4633200
136	-0.043 -0.123	149.0	143.0	7.8	11.0	4633300
140	-0.043 -0.123	153.0	147.0	7.8	11.0	4633400
145	-0.043 -0.123	158.0	152.0	7.8	11.0	4633500
160	-0.043 -0.123	174.0	167.0	7.8	11.0	4633600

Hallite

842

TECHNICAL DETAILS

METRIC ○ — INCH ●

OPERATING CONDITIONS

	METRIC	INCH
MAXIMUM SPEED	4.0 m/sec	12.0 ft/sec
TEMPERATURE RANGE	-45°C + 110°C	-50°F + 230°F

SURFACE ROUGHNESS

	µmRa	µmRt	µinCLA	µinRMS
DYNAMIC SEALING FACE $Ød_1$	0.1 ↔ 0.4	4 max	4 ↔ 16	5 ↔ 18
STATIC SEALING FACE $ØD_1$ $ØD_2$	1.6 max	10 max	63 max	70 max
STATIC HOUSING FACES L_1	3.2 max	16 max	125 max	140 max

RADII

ROD DIAMETER $Ød_1$	≤ 50	≤ 90	≤ 200	> 200
MAX FILLET RAD r_1 mm	0.4	0.4	0.4	0.8
MAX FILLET RAD r_2 mm	0.2	0.4	0.6	0.8
ROD DIAMETER $Ød_1$	≤ 2.000	≤ 3.500	≤ 7.875	> 7.875
MAX FILLET RAD r_1 in	0.016	0.016	0.016	0.032
MAX FILLET RAD r_2 in	0.008	0.016	0.024	0.032

TOLERANCES

	$Ød_1$	$ØD_1$	$ØD_2$	L_1	h
mm	f9	H11	H11	+0.2 -0	+0.10 +0
in	f9	H11	H11	+0.008 -0	+0.004 +0

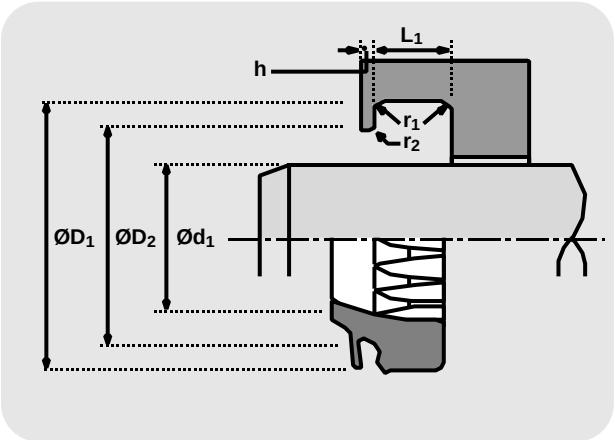

DESIGN

The Hallite 842 rod wiper is designed to prevent the ingress of foreign particles and moisture into the cylinder. The profile has been specially developed for harsh environments, in particular the longwall mining industry.

The special feature is the flap on the wiping lip which covers the gland housing, preventing the water/slurry trap so common with conventional wipers and thus ingress of contamination around the outside of the wiper. The internal ribs on the inside diameter prevent the possibility of pressure trapping between the gland seal and the wiper and ensure correct support and guidance of the wiping lip, even in cases of high eccentricity as can occur between the outer stage gland and the inner cylinder of a roof support leg.

The Hallite 842 is manufactured in Hallite„s high performance polyurethane, Hythane 181. The material has excellent compression set characteristics, excellent wear and abrasive resistance, proven compatibility with HFA (95/5) fluids, as used in longwall mining equipment, and with mineral oil.

NB: Part numbers suffixed by "‡" indicate housing sizes to meet ISO6195A.

Wipers

Hallite 842

metric

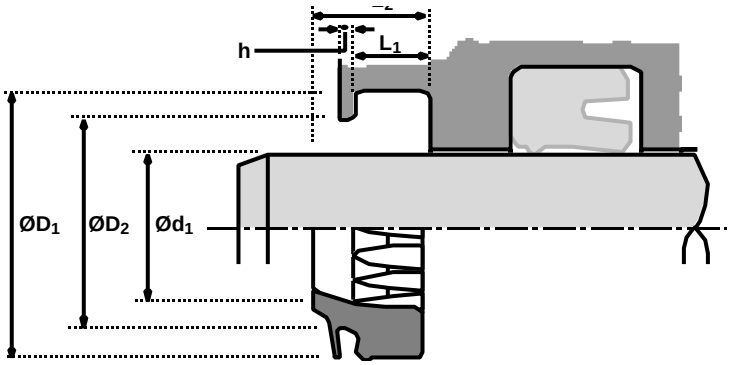

Ød1	TOL f9	ØD1	TOL H11	ØD2	TOL H11	L1 +0.2 - 0	L2	h +0.1 - 0	PART No.
32	-0.025 -0.087	40.0	+0.16 +0.00	37.5	+0.16 +0.00	5.0	8.0	1.50	4714900‡
35	-0.025 -0.087	45.0	+0.16 +0.00	42.0	+0.16 +0.00	6.3	10.0	1.50	4515300
36	-0.025 -0.087	44.0	+0.16 +0.00	41.5	+0.16 +0.00	5.0	8.0	1.50	4715000‡
38	-0.025 -0.087	46.0	+0.16 +0.00	43.0	+0.16 +0.00	5.3	8.0	1.50	4568700
40	-0.025 -0.087	48.0	+0.16 +0.00	45.0	+0.16 +0.00	5.0	8.0	1.50	4536500‡
45	-0.025 -0.087	53.0	+0.19 +0.00	50.5	+0.19 +0.00	5.0	8.0	1.50	4715100‡
50	-0.025 -0.087	58.0	+0.19 +0.00	55.0	+0.19 +0.00	5.0	8.0	1.50	4533600‡
56	-0.030 -0.104	66.0	+0.19 +0.00	63.0	+0.19 +0.00	6.3	10.0	1.50	4715200‡
60	-0.030 -0.104	70.0	+0.19 +0.00	67.0	+0.19 +0.00	6.3	10.0	1.50	4557800
63	-0.030 -0.104	73.0	+0.19 +0.00	70.0	+0.19 +0.00	6.3	10.0	1.50	4536600‡
70	-0.030 -0.104	82.6	+0.22 +0.00	78.4	+0.19 +0.00	8.0	12.0	2.00	4480800
80	-0.030 -0.104	90.0	+0.22 +0.00	87.0	+0.22 +0.00	6.3	10.0	1.50	4715300‡
85	-0.036 -0.123	97.6	+0.22 +0.00	93.4	+0.22 +0.00	8.0	12.0	2.00	4521800
90	-0.036 -0.123	102.6	+0.22 +0.00	98.4	+0.22 +0.00	8.0	12.0	2.00	4512500
95	-0.036 -0.123	110.0	+0.22 +0.00	105.0	+0.22 +0.00	9.5	14.0	2.80	4536900
100	-0.036 -0.123	114.0	+0.22 +0.00	109.9	+0.22 +0.00	8.0	12.0	1.50	4536000
100	-0.036 -0.123	115.0	+0.22 +0.00	108.4	+0.22 +0.00	9.5	14.0	2.00	4589500‡
105	-0.036 -0.123	120.0	+0.22 +0.00	115.0	+0.22 +0.00	9.5	14.0	2.50	4532100
110	-0.036 -0.123	125.0	+0.25 +0.00	120.0	+0.22 +0.00	9.5	14.0	2.50	4715400‡
120	-0.036 -0.123	135.0	+0.25 +0.00	130.0	+0.25 +0.00	9.5	14.0	2.00	4580800
125	-0.043 -0.143	140.0	+0.25 +0.00	135.0	+0.25 +0.00	9.5	14.0	2.00	4715500‡
130	-0.043 -0.143	145.0	+0.25 +0.00	140.0	+0.25 +0.00	9.5	14.0	2.25	4491700
140	-0.043 -0.143	155.0	+0.25 +0.00	150.0	+0.25 +0.00	9.5	14.0	2.00	4555900‡

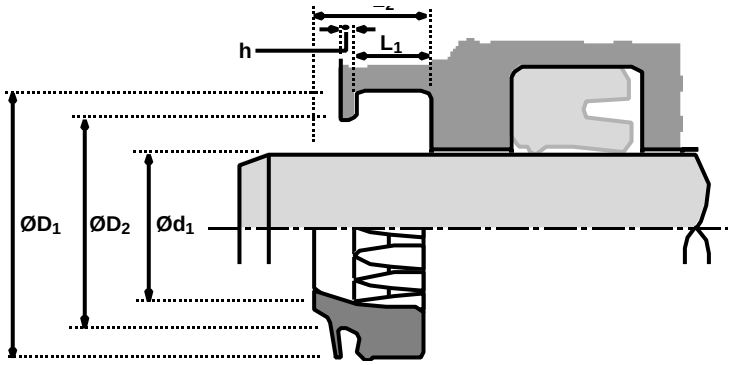

Wipers

Hallite 842

metric

Ød1	TOL f9	ØD1	TOL H11	ØD2	TOL H11	L1 +0.2 - 0	L2	h +0.1 - 0	PART No.
145	-0.043 -0.143	160.0	+0.25 +0.00	155.0	+0.25 +0.00	9.5	14.0	2.25	4570200
155	-0.043 -0.143	170.0	+0.25 +0.00	165.0	+0.25 +0.00	9.5	12.0	2.25	4535200
175	-0.043 -0.143	190.0	+0.29 +0.00	185.0	+0.29 +0.00	9.5	14.0	2.25	4552100
180	-0.043 -0.143	195.0	+0.29 +0.00	190.0	+0.29 +0.00	9.5	14.0	2.25	4491300‡
215	-0.050 -0.165	230	+0.29 +0.00	225.0	+0.29 +0.00	9.5	14.0	2.00	4705500

Wipers

Hallite 842

inch

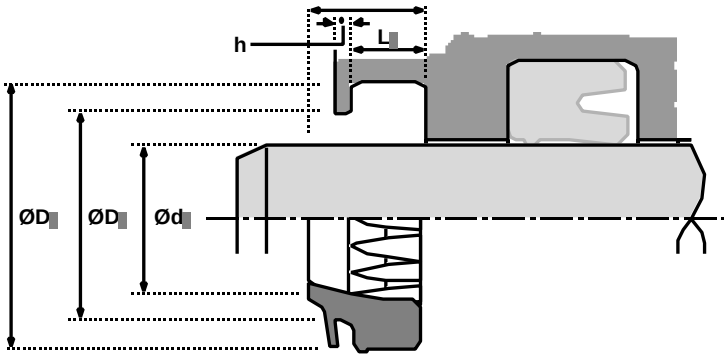

Ød$_1$	TOL f9	ØD$_1$	TOL H11	ØD$_2$	TOL H11	L$_1$ +0.008 - 0	L$_2$	h +0.004 - 0	PART No.
1.750	-0.0010 -0.0034	2.125	+0.007 +0.000	1.995	+0.007 +0.000	0.220	0.362	0.079	4543300
2.000	-0.0012 -0.0041	2.375	+0.007 +0.000	2.245	+0.007 +0.000	0.220	0.362	0.079	4543200
2.500	-0.0012 -0.0041	2.875	+0.007 +0.000	2.745	+0.007 +0.000	0.220	0.362	0.079	4708200
2.750	-0.0012 -0.0041	3.125	+0.007 +0.000	2.995	+0.007 +0.000	0.220	0.362	0.079	4554600
3.000	-0.0012 -0.0041	3.375	+0.009 +0.000	3.245	+0.009 +0.000	0.220	0.362	0.079	4543400
3.125	-0.0012 -0.0041	3.500	+0.009 +0.000	3.370	+0.009 +0.000	0.220	0.362	0.079	4543100
3.375	-0.0014 -0.0048	3.750	+0.009 +0.000	3.620	+0.009 +0.000	0.220	0.362	0.079	4554700
3.625	-0.0014 -0.0048	4.000	+0.009 +0.000	3.870	+0.009 +0.000	0.220	0.362	0.079	4543000
3.750	-0.0014 -0.0048	4.125	+0.009 +0.000	3.995	+0.009 +0.000	0.220	0.362	0.079	4708300
3.875	-0.0014 -0.0048	4.250	+0.009 +0.000	4.120	+0.009 +0.000	0.220	0.362	0.079	4523600
4.000	-0.0014 -0.0048	4.375	+0.009 +0.000	4.245	+0.009 +0.000	0.220	0.362	0.079	4708400
4.375	-0.0014 -0.0048	4.875	+0.010 +0.000	4.715	+0.010 +0.000	0.312	0.472	0.080	4707800
4.750	-0.0014 -0.0048	5.250	+0.010 +0.000	5.090	+0.010 +0.000	0.312	0.472	0.080	4547300
5.000	-0.0016 -0.0056	5.500	+0.010 +0.000	5.340	+0.010 +0.000	0.312	0.472	0.080	4708500
5.250	-0.0016 -0.0056	5.750	+0.010 +0.000	5.590	+0.010 +0.000	0.312	0.472	0.080	4707900
5.750	-0.0016 -0.0056	6.250	+0.010 +0.000	6.090	+0.010 +0.000	0.312	0.472	0.080	4547400
6.000	-0.0016 -0.0056	6.500	+0.010 +0.000	6.340	+0.010 +0.000	0.312	0.472	0.080	4708600
6.250	-0.0016 -0.0056	7.000	+0.010 +0.000	6.745	+0.010 +0.000	0.500	0.740	0.100	4708000
6.750	-0.0016 -0.0056	7.250	+0.012 +0.000	7.090	+0.010 +0.000	0.312	0.472	0.080	4547500
7.000	-0.0020 -0.0065	7.500	+0.012 +0.000	7.340	+0.012 +0.000	0.312	0.472	0.080	4708700
7.000	-0.0020 -0.0065	7.750	+0.012 +0.000	7.495	+0.012 +0.000	0.500	0.740	0.100	4588400
7.750	-0.0020 -0.0065	8.250	+0.012 +0.000	8.090	+0.012 +0.000	0.312	0.472	0.080	4547600
8.000	-0.0020 -0.0065	8.500	+0.012 +0.000	8.340	+0.012 +0.000	0.312	0.472	0.080	4708800
8.750	-0.0020 -0.0065	9.250	+0.012 +0.000	9.090	+0.012 +0.000	0.312	0.472	0.080	4536700

Hallite

846

TECHNICAL DETAILS

METRIC ○ — INCH ●

	METRIC			INCH	
OPERATING CONDITIONS					
MAXIMUM SPEED	4.0 m/sec			12.0 ft/sec	
TEMPERATURE RANGE	-45°C + 110°C			-50°F + 230°F	
SURFACE ROUGHNESS	µmRa	µmRt		µinCLA	µinRMS
DYNAMIC SEALING FACE $Ød_1$	0.1 ↔ 0.4	4 max		4 ↔ 16	5 ↔ 18
STATIC SEALING FACE $ØD_1$ $ØD_2$	1.6 max	10 max		63 max	70 max
STATIC HOUSING FACES L_1	3.2 max	16 max		125 max	140 max
RADII					
ROD DIAMETER $Ød_1$ mm	≤90	>90			
MAX FILLET RAD r_1 mm	0.4	0.4			
MAX FILLET RAD r_2 mm	0.2	0.4			
TOLERANCES	$Ød_1$	$ØD_1$	$ØD_2$	L_1	L_2
mm	f9	H11	H11	+0.2 -0	+0.2 -0

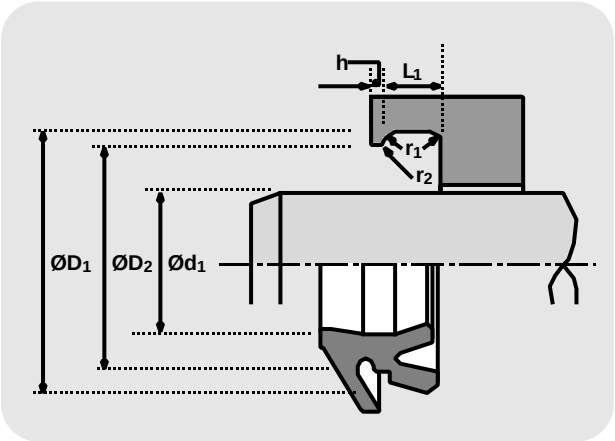

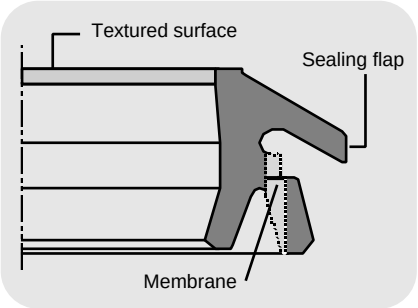

DESIGN

The Hallite 846 wiper is designed to exclude dirt and moisture from entering the cylinder and to collect traces of fluid passing the rod seal.

One special feature of the wiper design are the thin membranes which burst when excessive fluid pressure is trapped between the wiper and the rod seal and prevent the wiper being forced out of its housing . After release of this pressure, the membranes close to protect against contamination from the outside. This feature removes the requirement for an expensive vent hole in the gland.

A second feature is the sealing flap on the wiping lip that completely seals the metal housing groove, preventing the ingress of dirt and moisture around the outside diameter of the wiper.

Precision moulded in Hallite„s high performance polyurethane, Hythane 181, for maximum wear resistance and temperature range, the wiper is designed to remove lightly adhered dirt, dust and moisture from the rod.

FEATURES

- TWIN LIP - NO LEAKAGE
- TRAPPED PRESSURE AUTOMATICALLY RELEASED THROUGH BURSTING MEMBRANES
- NO PUSH OUT OF THE WIPER THROUGH BUILD UP OF PRESSURE
- NO GLAND VENT HOLE NECESSARY
- SEALING FLAP PROTECTS AGAINST INGRESS OF DIRT AND MOISTURE AROUND THE OUTSIDE DIAMETER

Wipers

Hallite
846

metric

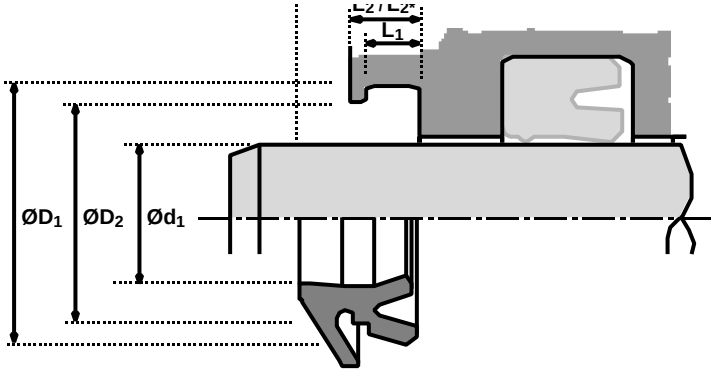

$Ød_1$	TOL f9	$ØD_1$	TOL H11	$ØD_2$	TOL H11	L_1 +0.2 - 0	L_2 +0.2 - 0	L_{2*} +0.2 - 0	L_3	PART No.
25	-0.020 -0.072	33.0	+0.16 +0.00	31.0	+0.16 +0.00	4.0	5.0	6.0	8.7	4556600
26	-0.020 -0.072	34.0	+0.16 +0.00	32.0	+0.16 +0.00	4.0	5.0	6.0	8.7	4588700
28	-0.020 -0.072	36.0	+0.16 +0.00	34.0	+0.16 +0.00	4.0	5.0	6.0	8.7	4556700
30	-0.020 -0.072	38.0	+0.16 +0.00	36.0	+0.16 +0.00	4.0	5.0	6.0	8.7	4584500
32	-0.025 -0.087	40.0	+0.16 +0.00	38.0	+0.16 +0.00	4.0	5.0	6.0	8.7	4568900
36	-0.025 -0.087	44.0	+0.16 +0.00	42.0	+0.16 +0.00	4.0	5.0	6.0	8.7	4588800
40	-0.025 -0.087	48.0	+0.16 +0.00	46.0	+0.16 +0.00	4.0	5.0	6.0	8.7	4549200
45	-0.025 -0.087	53.0	+0.19 +0.00	51.0	+0.19 +0.00	4.0	5.0	6.0	8.7	4589900
50	-0.025 -0.087	58.0	+0.19 +0.00	56.0	+0.19 +0.00	4.0	5.0	6.0	8.7	4597200
56	-0.030 -0.104	64.0	+0.19 +0.00	62.0	+0.19 +0.00	4.0	5.0	6.0	8.7	4588900
60	-0.030 -0.104	68.0	+0.19 +0.00	66.0	+0.19 +0.00	4.0	5.0	6.0	8.7	4596600
65	-0.030 -0.104	73.0	+0.19 +0.00	71.0	+0.19 +0.00	4.0	5.0	6.0	8.7	4597500
70	-0.030 -0.104	78.0	+0.19 +0.00	81.0	+0.19 +0.00	4.0	5.0	6.0	8.7	4556800
75	-0.030 -0.104	83.0	+0.22 +0.00	76.0	+0.19 +0.00	4.0	5.0	6.0	8.7	4597600
80	-0.030 -0.104	88.0	+0.22 +0.00	86.0	+0.22 +0.00	4.0	5.0	6.0	8.7	4590000
90	-0.036 -0.123	98.0	+0.22 +0.00	96.0	+0.22 +0.00	4.0	5.0	6.0	8.7	4557700
100	-0.036 -0.123	110.0	+0.22 +0.00	107.0	+0.22 +0.00	6.3	8.3	6.0	11.5	4723600

NB - The housing length shows options for L_2 and L_{2*} .
L_2 is the preferred dimension but either can be used.

Wipers

Hallite

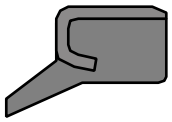

860

TECHNICAL DETAILS

METRIC ○ — INCH ●

OPERATING CONDITIONS

MAXIMUM SPEED	1.0 m/sec	3.0 ft/sec
TEMPERATURE RANGE	-40°C +100°C	-40°F +212°F

SURFACE ROUGHNESS

	µmRa	µmRt	µinCLA	µinRMS
DYNAMIC SEALING FACE $Ød_1$	0.1 ↔ 0.4	4 max	4 ↔ 16	5 ↔ 18
STATIC SEALING FACE $ØD_1$	1.6 max	10 max	63 max	70 max
STATIC HOUSING FACES L_1	3.2 max	16 max	125 max	140 max

CHAMFERS & RADII

ROD DIAMETER $Ød_1$ mm	≤ 19	> 19
MIN CHAMFER C mm	0.5	1.0
MAX FILLET RAD r_1 mm	0.4	0.4
ROD DIAMETER $Ød_1$ in	< 0.75	≥ 0.75
MIN CHAMFER C in	0.020	0.040
MAX FILLET RAD r_1 in	0.016	0.016

TOLERANCES

$Ød_1$	$ØD_1$	L_1 mm	L_1 in
f9	H8	+0.5 -0	+0.020 -0

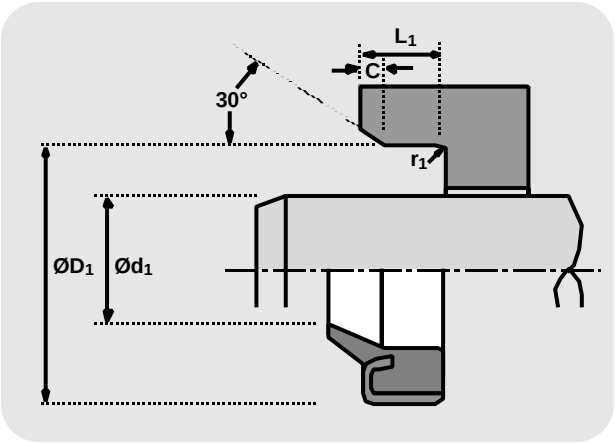

DESIGN

The Hallite 860 is a metal cased wiper, designed to press-fit into open groove housings. Hallite„s 860 wiper comprises a precisely trimmed polyurethane wiping element which is securely bonded to a metal case treated with a rust inhibitor. Capable of operating in dirty conditions, the proportions of the polyurethane wiping lip allow it to follow the side movement of the rod and to clear away heavily deposited dirt.

Suitable for light, medium and heavy duty applications, the wiper has been designed to provide ease of installation and offers excellent durability in service. The Hallite 860 offers a range of sizes suitable for ISO 6195 type B housings and a range for standard Asian housings.

FEATURES

- EASE OF ASSEMBLY
- LONG LIFE
- PRECISION TRIMMED WIPING LIP
- METAL CASE TREATED WITH A RUST INHIBITOR
- WIDE RANGE OF APPLICATION USES
- RANGE INCLUDES ISO & STANDARD ASIAN HOUSINGS.

NB: Part numbers suffixed by ††· are designed for Asian housings.

Part numbers suffixed by "‡" indicate housing sizes to meet ISO 6195 type B.

Wipers

Hallite 860

metric

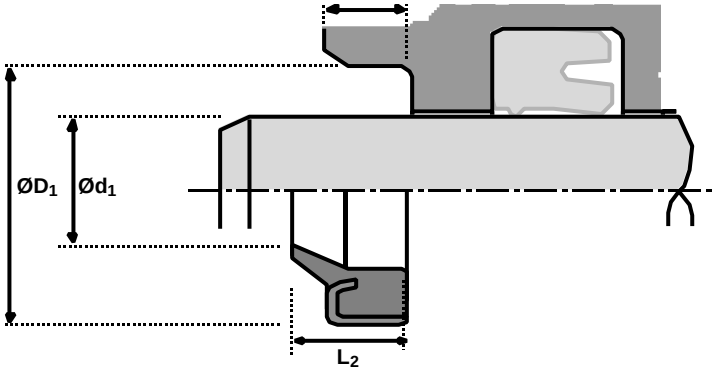

Ød1	TOL f9	ØD1	TOL H8	L1 +0.5 - 0	L2	PART No.
15	-0.016 -0.059	25	+0.033 +0.000	5.0	7.0	6950000
16	-0.016 -0.059	22	+0.033 +0.000	3.0	4.0	6950010
18	-0.016 -0.059	28	+0.033 +0.000	5.0	7.0	6950020
20	-0.020 -0.072	30	+0.033 +0.000	5.0	8.0	6950030
25	-0.020 -0.072	35	+0.039 +0.000	5.0	8.0	6950040
25	-0.020 -0.072	37	+0.039 +0.000	6.0	9.0	6950050†
28	-0.020 -0.072	38	+0.039 +0.000	5.0	8.0	6950060
30	-0.020 -0.072	40	+0.039 +0.000	5.0	8.0	6950070
30	-0.020 -0.072	42	+0.039 +0.000	6.0	9.0	6950080†
32	-0.025 -0.087	42	+0.039 +0.000	5.0	8.0	6950090
35	-0.025 -0.087	45	+0.039 +0.000	7.0	10.0	6950100
35	-0.025 -0.087	47	+0.039 +0.000	7.0	10.0	6950110†
38	-0.025 -0.087	48	+0.039 +0.000	7.0	10.0	6950470
40	-0.025 -0.087	50	+0.039 +0.000	7.0	10.0	6950120‡
40	-0.025 -0.087	52	+0.046 +0.000	7.0	10.0	6950130†
45	-0.025 -0.087	55	+0.046 +0.000	7.0	10.0	6950140‡
45	-0.025 -0.087	57	+0.046 +0.000	7.0	10.0	6950150†
50	-0.025 -0.087	60	+0.046 +0.000	7.0	10.0	6950160‡
50	-0.025 -0.087	62	+0.046 +0.000	7.0	10.0	6950170†
55	-0.030 -0.104	65	+0.046 +0.000	7.0	10.0	6950180
55	-0.030 -0.104	69	+0.046 +0.000	8.0	11.0	6950190†
60	-0.030 -0.104	70	+0.046 +0.000	7.0	10.0	6950200
60	-0.030 -0.104	74	+0.046 +0.000	8.0	11.0	6950210†
65	-0.030 -0.104	75	+0.046 +0.000	7.0	10.0	6950220

Ød1	TOL f9	ØD1	TOL H8	L1 +0.5 - 0	L2	PART No.
65	-0.030 -0.104	79	+0.046 +0.000	8.0	11.0	6950230†
70	-0.030 -0.104	80	+0.046 +0.000	7.0	10.0	6950240‡
70	-0.030 -0.104	84	+0.054 +0.000	8.0	11.0	6950250†
75	-0.030 -0.104	85	+0.054 +0.000	7.0	10.0	6950260
75	-0.030 -0.104	89	+0.054 +0.000	8.0	11.0	6950270†
80	-0.030 -0.104	90	+0.054 +0.000	7.0	10.0	6950280‡
80	-0.030 -0.104	94	+0.054 +0.000	8.0	11.0	6950290†
85	-0.036 -0.123	95	+0.054 +0.000	7.0	10.0	6950300
85	-0.036 -0.123	99	+0.054 +0.000	8.0	11.0	6950310†
90	-0.036 -0.123	100	+0.054 +0.000	7.0	10.0	6950320‡
90	-0.036 -0.123	104	+0.054 +0.000	8.0	11.0	6950330†
95	-0.036 -0.123	109	+0.054 +0.000	8.0	11.0	6950340†
100	-0.036 -0.123	110	+0.054 +0.000	7.0	10.0	6950350
100	-0.036 -0.123	114	+0.054 +0.000	8.0	11.0	6950360†
105	-0.036 -0.123	121	+0.063 +0.000	9.0	12.0	6950370†
110	-0.036 -0.123	120	+0.054 +0.000	7.0	10.0	6950380
110	-0.036 -0.123	126	+0.063 +0.000	9.0	12.0	6950390†
115	-0.036 -0.123	131	+0.063 +0.000	9.0	12.0	6950400†
120	-0.036 -0.123	130	+0.063 +0.000	7.0	10.0	6950410
120	-0.036 -0.123	136	+0.063 +0.000	9.0	12.0	6950420†
130	-0.043 -0.143	146	+0.063 +0.000	9.0	12.0	6950430†
140	-0.043 -0.143	160	+0.063 +0.000	10.0	14.0	6950440†
150	-0.043 -0.143	170	+0.063 +0.000	10.0	14.0	6950450†
160	-0.043 -0.143	180	+0.063 +0.000	10.0	14.0	6950460†

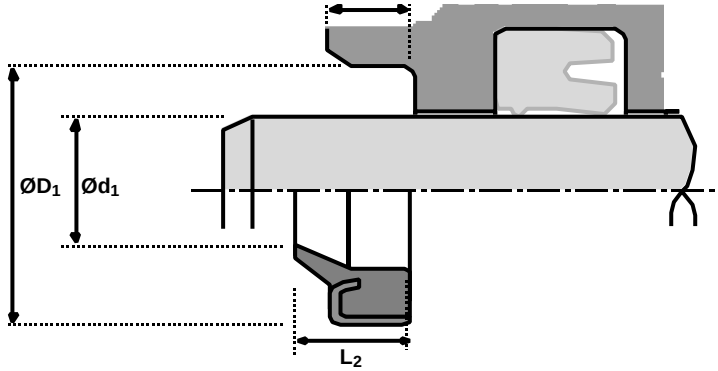

Wipers

Hallite 860

inch

Ød1	TOL f9	ØD1	TOL H8	L1 +0.020 - 0	L2	PART No.
0.750	-0.0008 -0.0028	1.125	+0.0013 +0.0000	0.187	0.281	6955100
1.000	-0.0008 -0.0028	1.375	+0.0015 +0.0000	0.187	0.281	6955120
1.250	-0.0010 -0.0034	1.625	+0.0015 +0.0000	0.187	0.281	6955140
1.500	-0.0010 -0.0034	1.875	+0.0015 +0.0000	0.187	0.281	6955160
1.750	-0.0010 -0.0034	2.125	+0.0018 +0.0000	0.187	0.281	6955180

Ød1	TOL f9	ØD1	TOL H8	L1 +0.020 - 0	L2	PART No.
2.000	-0.0012 -0.0041	2.375	+0.0018 +0.0000	0.187	0.281	6955200
2.250	-0.0012 -0.0041	2.625	+0.0018 +0.0000	0.187	0.281	6955220
2.500	-0.0012 -0.0041	2.875	+0.0018 +0.0000	0.187	0.281	6955240
2.750	-0.0012 -0.0041	3.125	+0.0018 +0.0000	0.187	0.281	6955260
3.000	-0.0012 -0.0041	3.375	+0.0021 +0.0000	0.187	0.281	6955280

Notes

Wipers

Hallite

862

TECHNICAL DETAILS

METRIC ○ — INCH ●

OPERATING CONDITIONS				
MAXIMUM SPEED	1.0 m/sec		3.0 ft/sec	
TEMPERATURE RANGE	-40°C +100°C		-40°F +212°F	
SURFACE ROUGHNESS	µmRa	µmRt	µinCLA	µinRMS
DYNAMIC SEALING FACE $Ød_1$	0.1 ↔ 0.4	4 max	4 ↔ 16	5 ↔ 18
STATIC SEALING FACE $ØD_1$	1.6 max	10 max	63 max	70 max
STATIC HOUSING FACES L_1	3.2 max	16 max	125 max	140 max
CHAMFERS & RADII				
MIN CHAMFER C in	0.040			
MAX FILLET RAD r_1 in	0.016			
TOLERANCES	$Ød_1$	$ØD_1$	L_1	
in	f9	H8	+0.020 -0	

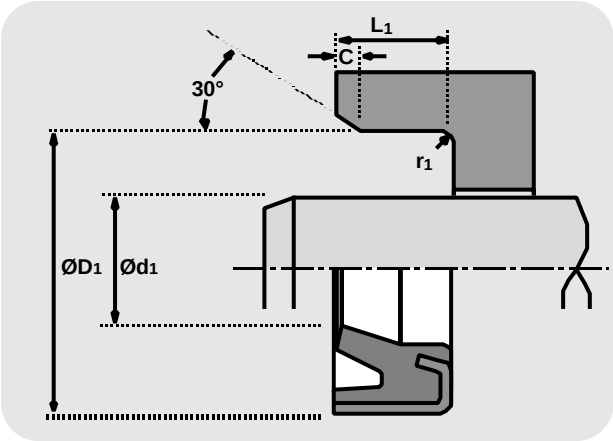

DESIGN

The Hallite 862 is a metal cased wiper, designed to press-fit into open groove housings. Hallite„s 862 comprises a precisely trimmed polyurethane wiping element which is securely bonded to a metal case treated with a rust inhibitor. Capable of operating in dirty conditions, the proportions of the polyurethane wiping lip allow it to follow the side movement of the rod and to clear away heavily deposited dirt.

Suitable for light, medium and heavy duty applications, the wiper has been designed to provide ease of installation and offers excellent durability in service.

The Hallite 862 offers a range of sizes suitable for standard American inch housings.

FEATURES

- EASE OF ASSEMBLY
- LONG LIFE
- PRECISION TRIMMED WIPING LIP
- METAL CASE TREATED WITH A RUST INHIBITOR
- WIDE RANGE OF APPLICATION USES

Wipers

Hallite
862

inch

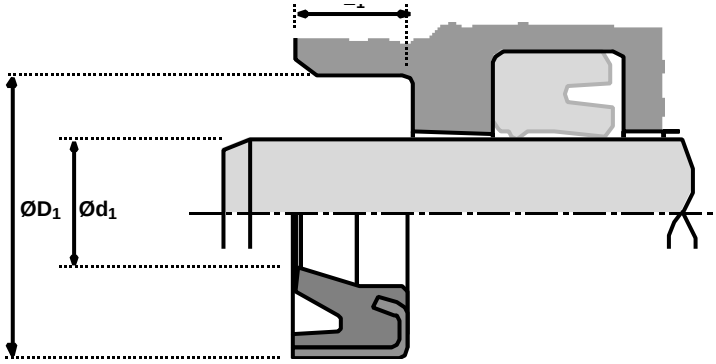

Ød1	TOL f9	ØD1	TOL H8	L1	TOL	PART No.
0.625	-0.0006 -0.0023	1.125	+0.0012 +0.0000	0.313	+0.020 -0.000	6960000
0.750	-0.0008 -0.0028	1.250	+0.0016 +0.0000	0.313	+0.020 -0.000	6960010
1.000	-0.0008 -0.0028	1.500	+0.0016 +0.0000	0.313	+0.020 -0.000	6960020
1.125	-0.0008 -0.0028	1.625	+0.0016 +0.0000	0.313	+0.020 -0.000	6960030
1.250	-0.0008 -0.0008	1.750	+0.0016 +0.0000	0.250	+0.020 -0.000	6960260
1.250	-0.0010 -0.0034	1.750	+0.0016 +0.0000	0.313	+0.020 -0.000	6960040
1.375	-0.0010 -0.0034	1.875	+0.0016 +0.0000	0.313	+0.020 -0.000	6960050
1.500	-0.0010 -0.0034	2.000	+0.0018 +0.0000	0.313	+0.020 -0.000	6960060
1.625	-0.0010 -0.0034	2.125	+0.0018 +0.0000	0.313	+0.020 -0.000	6960070
1.750	-0.0010 -0.0034	2.250	+0.0018 +0.0000	0.313	+0.020 -0.000	6960080
2.000	-0.0012 -0.0041	2.500	+0.0018 +0.0000	0.313	+0.020 -0.000	6960090
2.250	-0.0012 -0.0041	2.750	+0.0018 +0.0000	0.313	+0.020 -0.000	6960100
2.500	-0.0012 -0.0041	3.000	+0.0018 +0.0000	0.313	+0.020 -0.000	6960110
2.750	-0.0012 -0.0041	3.250	+0.0022 +0.0000	0.313	+0.020 -0.000	6960120

Ød1	TOL f9	ØD1	TOL H8	L1	TOL	PART No.
3.000	-0.0012 -0.0041	3.500	+0.0022 +0.0000	0.313	+0.020 -0.000	6960130
3.250	-0.0014 -0.0048	3.750	+0.0022 +0.0000	0.313	+0.020 -0.000	6960140
3.250	-0.0014 -0.0048	3.875	+0.0022 +0.0000	0.313	+0.020 -0.000	6960150
3.500	-0.0014 -0.0048	4.000	+0.0022 +0.0000	0.313	+0.020 -0.000	6960160
3.500	-0.0014 -0.0048	4.125	+0.0022 +0.0000	0.313	+0.020 -0.000	6960170
3.750	-0.0014 -0.0048	4.375	+0.0022 +0.0000	0.313	+0.020 -0.000	6960180
4.000	-0.0014 -0.0048	4.625	+0.0022 +0.0000	0.313	+0.020 -0.000	6960190
4.000	-0.0014 -0.0048	4.750	+0.0025 +0.0000	0.313	+0.020 -0.000	6960200
4.000	-0.0014 -0.0048	5.000	+0.0025 +0.0000	0.500	+0.020 -0.000	6960210
4.500	-0.0014 -0.0048	5.125	+0.0025 +0.0000	0.313	+0.020 -0.000	6960220
4.500	-0.0014 -0.0048	5.500	+0.0025 +0.0000	0.500	+0.020 -0.000	6960230
5.000	-0.0016 -0.0056	5.625	+0.0025 +0.0000	0.313	+0.020 -0.000	6960240
5.000	-0.0016 -0.0056	6.000	+0.0025 +0.0000	0.500	+0.020 -0.000	6960250

Hallite Seals

Materials & fluid compatibility

Max. continuous working temperatures C° and temperature ranges for materials, within fluid power fluids

			SERVICE FLUIDS								
			Fluids based on mineral oils				Greases		Fuels		
Material	Continuous material service temperature range °C	Intermittent material service temperature range °C	Motor oils	Hypoid gear oils	Automatic transmission fluid	ISO 6743-4 Hydraulic oils (HL, HM, HV)	Mineral oil based greases	Silicon based greases	Diesel fuel	Fuel for gasoline/ petrol engines - normal	Fuel for gasoline/ petrol engines - super
Temperature range for fluid °C			+ 150 - 40	+ 150 - 40	+ 160 - 50	+ 100 - 30	+ 100 - 30	+ 250 - 50			
			Maximum continuous service temperature in fluids °C								
NBR 70 IRHD NBR 90 IRHD Nitrile (medium)	+ 100 - 30	+ 120 - 30	100	90	100	100	100	100	*	*	*
FKM 75 IRHD FKM 90 IRHD Fluoro-elastomer	+ 200 - 20	+ 250 - 20	150	150	160	100	100	200	150	150	150
EPDM 70 IRHD EPDM 80 IRHD	+ 120 - 50	+ 150 - 50	NS	NS	NS	NS	NS	120	NS	NS	NS
VMQ 70 IRHD Silicone	+ 200 - 55	+ 250 - 55	*	*	*	*	100	*	NS	NS	NS
HNBR 75 IRHD Hydrogenated nitrile	+ 130 - 30	+ 150 - 30	130	110	130	100	100	130	*	*	*
IIR Butyl	+ 120 - 40	+ 140 - 40	NS	NS	NS	NS	NS	120	NS	NS	NS
FFKM Perfluoro-elastomer	+300 +200 +40 -20		150	150	160	100	100	200	150	150	150
AU Polyester PU	+ 100 - 30	+ 110 - 30	100	100	100	100	100	100	60	60	60
EU Polyether PU	+ 100 - 40	+ 110 - 45	100	100	100	100	100	100	60	60	60
Polyester elastomer	+ 100 - 40	+ 120 - 40	100	100	100	100	100	100	60	60	60
PA Polyamide	+ 100 - 40	+ 120 - 40	100	100	100	100	100	100	100	100	100
POM Acetal	+ 100 - 45	+ 120 - 45	100	100	100	100	100	100	100	100	100
PPS Polyphenylene sulphide	+ 200 - 40	+ 200 - 40	150	150	160	100	100	200	150	150	150
PTFE Polytetra-fluoroethylene	+ 200 - 200	+ 200 - 200	150	150	160	100	100	200	150	150	150
Thermosetting polyester resin	+ 100 - 50	+ 130 - 200	100	100	100	100	100	100	100	100	100
PEEK Polyether-etherketone	+ 250 - 65	+ 300 - 65	150	150	160	100	100	250	150	150	150

* Denotes that values vary greatly for individual elastomers within this group NS Denotes that the elastomer is not suitable

The work of the BFPA technical working group 'TC16/WG8'in the compilation of this table is acknowledged.

Hallite Seals

Materials & fluid compatibility

Max. continuous working temperatures C° and temperature ranges for materials, within fluid power fluids

SERVICE FLUIDS											
Fire-resistant hydraulic fluids					Environmentally acceptable fluids				Other service fluids		
ISO 6743-4 HFA fluids (5/95 water based)	ISO 6743-4 HFB fluids (60/40 invert emulsion)	ISO 6743-4 HFC fluids (water glycol)	ISO 6743-4 HFDR fluids (phosphate ester ALKYL (aero))	ISO 6743-4 HFDR fluids (phosphate ester ARYL (ind.))	ISO 6743-4 HETG fluids (Vegetable oil based)	ISO 6743-4 HEES fluids (Synthetic ester based)	ISO 6743-4 HEPG fluids (Synthetic glycol based)	ISO 6743-4 HEPR fluids (Synthetic hydrocarbons)	Water	Air	Brake fluids
+ 60 + 5	+ 60 + 5	+ 60 - 30	+ 100 - 50	+ 150 - 0	+ 60 - 10	+ 100 - 40	+ 100 - 50	+ 150 - 50	+ 60 (1) + 5	+ 200 + 2	+ 130 - 50
Maximum continuous service temperature in fluids °C											
60	60	60	NS	NS	60	60	60	100	80	100	NS
60	60	NS	NS	150	60	100	80	150	100	200	NS
NS	NS	60	80	80	NS	NS	NS	NS	120	120	120
NS	NS	NS	NS	NS	NS	NS	NS	*	100	200	80
60	60	60	NS	NS	60	60	80	130	130	130	NS
NS	NS	60	100	120	NS	NS	NS	NS	120	120	80
60	60	60	100	150	60	100	100	150	150	200	130
40	40	NS	NS	NS	60	60	60	100	40	40	NS
60	60	40	NS	NS	60	80	60	100	60	80	NS
60	60	NS	NS	NS	60	80	60	100	60	80	NS
60	60	60	100	100	60	100	100	100	60	80	80
60	60	60	100	100	60	100	100	100	80	80	80
60	60	60	100	150	60	100	100	150	150	200	130
60	60	60	100	150	60	100	100	150	150	200	130
60	60	40	100	100	60	100	100	100	80	100	NS
60	60	60	100	150	60	100	100	150	150	200	130

In view of the variations in formulation of both oils and polymers, the compatibility of all combinations should be confirmed by testing and field service performance for each application.

(1) Temperature range for water in fluid power applications.